YAMAHA

# YFM40FBW

# SERVICE MANUAL

LIT-11616-20-45 4S1-F8197-10

EBS00001

**YFM40FBW**
**SERVICE MANUAL**
**©2006 by Yamaha Motor Corporation, U.S.A.**
**First Edition, November 2006**
**All rights reserved.**
**Any reproduction or unauthorized use**
**without the written permission of**
**Yamaha Motor Corporation, U.S.A.**
**is expressly prohibited.**
**Printed in U.S.A.**
**LIT-11616-20-45**

EBS00002

# NOTICE

This manual was produced by the Yamaha Motor Company primarily for use by Yamaha dealers and their qualified mechanics. It is not possible to include all the knowledge of a mechanic in one manual, so it is assumed that anyone who uses this book to perform maintenance and repairs on Yamaha vehicle has a basic understanding of the mechanical ideas and the procedures of vehicle repair. Repairs attempted by anyone without this knowledge are likely to render the vehicle unsafe and unfit for use.

This model has been designed and manufactured to perform within certain specifications in regard to performance and emissions. Proper service with the correct tools is necessary to ensure that the vehicle will operate as designed. If there is any question about a service procedure, it is imperative that you contact a Yamaha dealer for any service information changes that apply to this model. This policy is intended to provide the customer with the most satisfaction from his vehicle and to conform to federal environmental quality objectives.

Yamaha Motor Company, Ltd. is continually striving to improve all its models. Modifications and significant changes in specifications or procedures will be forwarded to all authorized Yamaha dealers and will appear in future editions of this manual where applicable.

**NOTE:**

- This Service Manual contains information regarding periodic maintenance to the emission control system. Please read this material carefully.
- Designs and specifications are subject to change without notice.

EBS00003

# IMPORTANT INFORMATION

Particularly important information is distinguished in this manual by the following notations.

| | |
|---|---|
| ⚠ | The Safety Alert Symbol means ATTENTION! BECOME ALERT! YOUR SAFETY IS INVOLVED! |
| **⚠ WARNING** | Failure to follow WARNING instructions could result in severe injury or death to the vehicle operator, a bystander or a person checking or repairing the vehicle. |
| **CAUTION:** | A CAUTION indicates special precautions that must be taken to avoid damage to the vehicle. |
| **NOTE:** | A NOTE provides key information to make procedures easier or clearer. |

EBS00004

# HOW TO USE THIS MANUAL

## MANUAL ORGANIZATION

This manual consists of chapters for the main categories of subjects. (See “symbols”)
1st title ①: This is the title of the chapter with its symbol in the upper right corner of each page.
2nd title ②: This title indicates the section of the chapter and only appears on the first page of each section. It is located in the upper left corner of the page.
3rd title ③: This title indicates a sub-section that is followed by step-by-step procedures accompanied by corresponding illustrations.

## EXPLODED DIAGRAMS

To help identify parts and clarify procedure steps, there are exploded diagrams at the start of each removal and disassembly section.

1. An easy-to-see exploded diagram ④ is provided for removal and disassembly jobs.
2. Numbers ⑤ are given in the order of the jobs in the exploded diagram. A number that is enclosed by a circle indicates a disassembly step.
3. An explanation of jobs and notes is presented in an easy-to-read way by the use of symbol marks ⑥. The meanings of the symbol marks are given on the next page.
4. A job instruction chart ⑦ accompanies the exploded diagram, providing the order of jobs, names of parts, notes in jobs, etc.
5. For jobs requiring more information, the step-by-step format supplements ⑧ are given in addition to the exploded diagram and the job instruction chart.

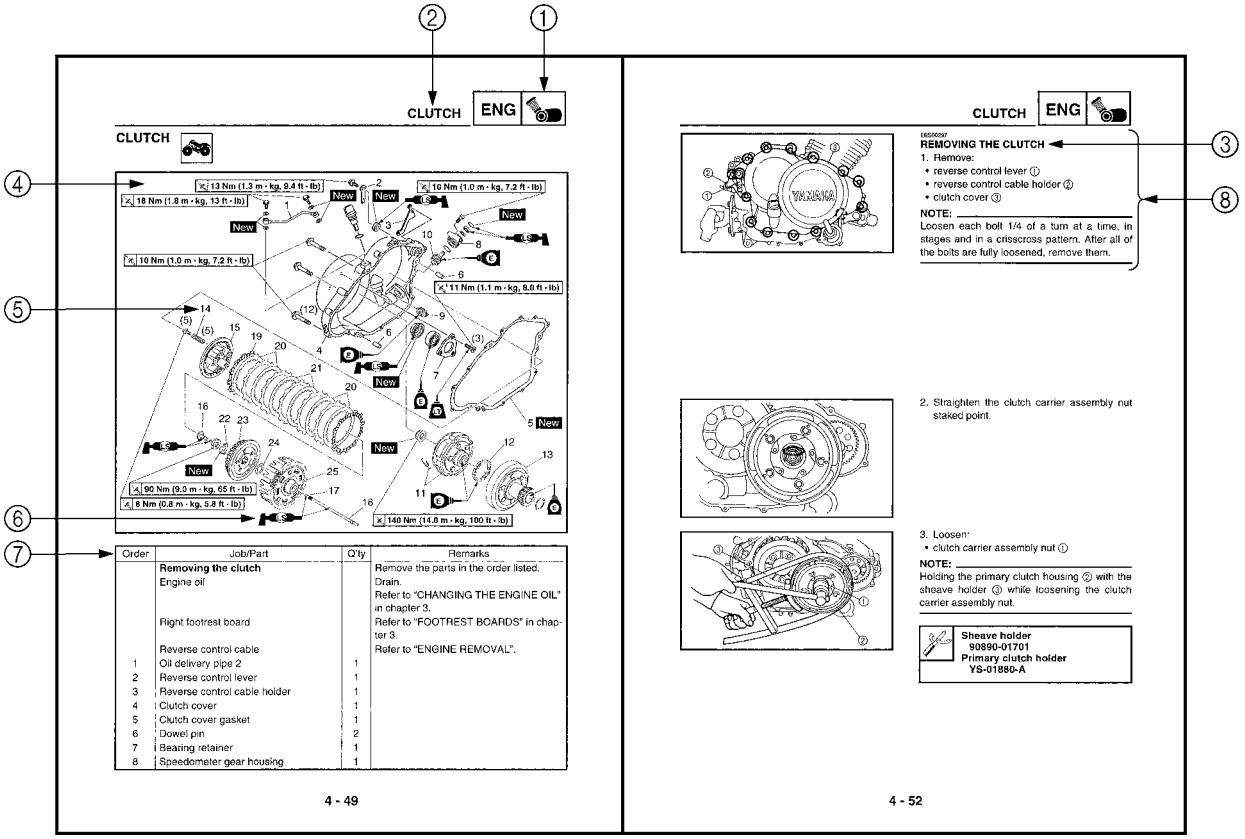

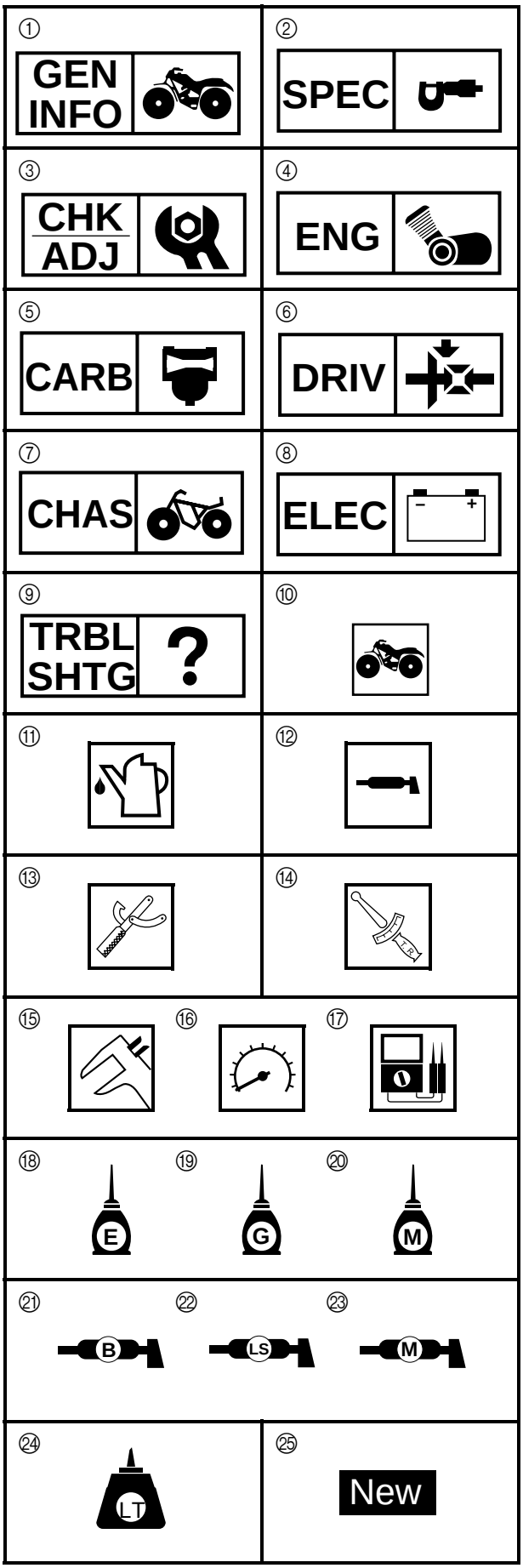


EBS00005

## SYMBOLS

The following symbols are not relevant to every vehicle.

Symbols ① to ⑨ indicate the subject of each chapter.

① General information
② Specifications
③ Periodic checks and adjustments
④ Engine
⑤ Carburetor
⑥ Drive train
⑦ Chassis
⑧ Electrical
⑨ Troubleshooting

Symbols ⑩ to ⑰ indicate the following.

⑩ Can be serviced with engine mounted
⑪ Filling fluid
⑫ Lubricant
⑬ Special tool
⑭ Torque
⑮ Wear limit, clearance
⑯ Engine speed
⑰ Electrical data (Ω, V, A)

Symbols ⑱ to ㉓ in the exploded diagrams indicate the types of lubricants and lubrication points.

⑱ Apply engine oil
⑲ Apply gear oil
⑳ Apply molybdenum disulfide oil
㉑ Apply wheel bearing grease
㉒ Apply lithium-soap-based grease
㉓ Apply molybdenum disulfide grease

Symbols ㉔ to ㉕ in the exploded diagrams indicate where to apply a locking agent ㉔ and when to install a new part ㉕.

㉔ Apply the locking agent (LOCTITE®)
㉕ Replace

EBS00007

# TABLE OF CONTENTS


| | |
|---|---|
| GENERAL INFORMATION | GEN INFO 1 |
| SPECIFICATIONS | SPEC 2 |
| PERIODIC CHECKS AND ADJUSTMENTS | CHK ADJ 3 |
| ENGINE | ENG 4 |
| CARBURETOR | CARB 5 |
| DRIVE TRAIN | DRIV 6 |
| CHASSIS | CHAS 7 |
| ELECTRICAL | ELEC 8 |
| TROUBLESHOOTING | TRBL SHTG 9 |

# CONTENTS

## CHAPTER 1
## GENERAL INFORMATION

**VEHICLE IDENTIFICATION** ..... 1-1
VEHICLE IDENTIFICATION NUMBER ..... 1-1
MODEL LABEL ..... 1-1

**FEATURES** ..... 1-2
WET MULTIPLE DISC BRAKE ..... 1-2

**IMPORTANT INFORMATION** ..... 1-3
PREPARATION FOR REMOVAL AND DISASSEMBLY ..... 1-3
REPLACEMENT PARTS ..... 1-3
GASKETS, OIL SEALS AND O-RINGS ..... 1-3
LOCK WASHERS/PLATES AND COTTER PINS ..... 1-4
BEARINGS AND OIL SEALS ..... 1-4
CIRCLIPS ..... 1-4
CHECKING THE CONNECTIONS ..... 1-5

**SPECIAL TOOLS** ..... 1-6

## CHAPTER 2
## SPECIFICATIONS

**GENERAL SPECIFICATIONS** ..... 2-1

**ENGINE SPECIFICATIONS** ..... 2-5

**CHASSIS SPECIFICATIONS** ..... 2-14

**ELECTRICAL SPECIFICATIONS** ..... 2-16

**TIGHTENING TORQUES** ..... 2-18
ENGINE TIGHTENING TORQUES ..... 2-18
CHASSIS TIGHTENING TORQUES ..... 2-20

**HOW TO USE THE CONVERSION TABLE** ..... 2-22

**GENERAL TIGHTENING TORQUE SPECIFICATIONS** ..... 2-22

**LUBRICATION POINTS AND LUBRICANT TYPES** ..... 2-23
ENGINE ..... 2-23

**LUBRICATION DIAGRAMS** ..... 2-24

**CABLE ROUTING** ..... 2-26

# CHAPTER 3
# PERIODIC CHECKS AND ADJUSTMENTS

**INTRODUCTION** ..... 3-1

**PERIODIC MAINTENANCE CHART FOR THE EMISSION CONTROL SYSTEM** ..... 3-1

**GENERAL MAINTENANCE AND LUBRICATION CHART** ..... 3-2

**SEAT, CARRIERS, FENDERS, FUEL TANK AND AIR FILTER** ..... 3-4
SEAT ..... 3-4
FRONT CARRIER, FRONT GUARD AND FRONT FENDER ..... 3-5
REAR CARRIER AND REAR FENDER ..... 3-6
FUEL TANK AND AIR FILTER CASE ..... 3-8

**FOOTREST BOARDS** ..... 3-10
INSTALLING THE REAR SKID PLATE ..... 3-11

**ENGINE** ..... 3-12
ADJUSTING THE VALVE CLEARANCE ..... 3-12
ADJUSTING THE IDLING SPEED ..... 3-15
ADJUSTING THE THROTTLE LEVER FREE PLAY ..... 3-16
ADJUSTING THE SPEED LIMITER ..... 3-17
ADJUSTING THE STARTER CABLE ..... 3-18
CHECKING THE SPARK PLUG ..... 3-19
CHECKING THE IGNITION TIMING ..... 3-20
MEASURING THE COMPRESSION PRESSURE ..... 3-21
CHECKING THE ENGINE OIL LEVEL ..... 3-22
OIL TEMPERATURE WARNING LIGHT CHECK ..... 3-24
CHANGING THE ENGINE OIL ..... 3-24
ADJUSTING THE CLUTCH RELEASE ..... 3-26
CLEANING THE AIR FILTER ELEMENT ..... 3-27
CHECKING THE CARBURETOR JOINT ..... 3-28
CHECKING THE FUEL HOSE ..... 3-28
CHECKING THE CYLINDER HEAD BREATHER HOSE ..... 3-29
CHECKING THE EXHAUST SYSTEM ..... 3-29
CLEANING THE SPARK ARRESTER ..... 3-30

**CHASSIS** ..... 3-31
ADJUSTING THE FRONT BRAKE ..... 3-31
ADJUSTING THE REAR BRAKE ..... 3-31
CHECKING THE BRAKE FLUID LEVEL ..... 3-33
CHECKING THE FRONT BRAKE PADS ..... 3-34
CHECKING THE REAR BRAKE PLATES ..... 3-34
ADJUSTING THE REAR BRAKE LIGHT SWITCH ..... 3-34
CHECKING THE BRAKE HOSES ..... 3-35
BLEEDING THE HYDRAULIC BRAKE SYSTEM ..... 3-36
REVERSE CONTROL CABLE ADJUSTMENT ..... 3-37
ADJUSTING THE SHIFT PEDAL ..... 3-38
CHECKING THE FINAL GEAR OIL LEVEL ..... 3-39
CHANGING THE FINAL GEAR OIL ..... 3-39
CHECKING THE DIFFERENTIAL GEAR OIL ..... 3-40
CHANGING THE DIFFERENTIAL GEAR OIL ..... 3-41
CHECKING THE CONSTANT VELOCITY JOINT DUST BOOTS ..... 3-42
CHECKING THE STEERING SYSTEM ..... 3-42
ADJUSTING THE TOE-IN ..... 3-43
CHECKING THE FRONT AND REAR SHOCK ABSORBERS ..... 3-45
ADJUSTING THE FRONT SHOCK ABSORBER ..... 3-45
ADJUSTING THE REAR SHOCK ABSORBERS ..... 3-46
CHECKING THE TIRES ..... 3-47
CHECKING THE WHEELS ..... 3-49
CHECKING AND LUBRICATING THE CABLES ..... 3-49
LUBRICATING THE LEVERS AND PEDALS ..... 3-50

**ELECTRICAL SYSTEM** ..... 3-51
CHECKING AND CHARGING THE BATTERY ..... 3-51
CHECKING THE FUSES ..... 3-57
ADJUSTING THE HEADLIGHT BEAMS ..... 3-59
REPLACING A HEADLIGHT BULB ..... 3-59

# CHAPTER 4
# ENGINE

**ENGINE REMOVAL** ..... 4-1
MUFFLER AND EXHAUST PIPE ..... 4-1
LEADS, CABLES AND HOSES ..... 4-2
ENGINE MOUNTING BOLTS ..... 4-4
INSTALLING THE ENGINE ..... 4-6

**OIL COOLER** ..... 4-7

**CYLINDER HEAD** ..... 4-8
REMOVING THE CYLINDER HEAD ..... 4-10
CHECKING THE TAPPET COVERS ..... 4-11
CHECKING THE TIMING CHAIN TENSIONER ..... 4-11
CHECKING THE CAMSHAFT SPROCKET ..... 4-12
CHECKING THE CYLINDER HEAD ..... 4-12
INSTALLING THE CYLINDER HEAD ..... 4-13

**CAMSHAFT, ROCKER ARMS AND VALVES** ..... 4-17
REMOVING THE ROCKER ARMS AND CAMSHAFT ..... 4-19
REMOVING THE VALVES AND VALVE SPRINGS ..... 4-19
CHECKING THE CAMSHAFT ..... 4-20
CHECKING THE ROCKER ARMS AND ROCKER ARM SHAFTS ..... 4-20
CHECKING THE VALVES AND VALVE SPRINGS ..... 4-22
INSTALLING THE VALVES AND VALVE SPRINGS ..... 4-27
INSTALLING THE CAMSHAFT AND ROCKER ARMS ..... 4-27

**CYLINDER AND PISTON** ..... 4-29
REMOVING THE PISTON ..... 4-30
CHECKING THE CYLINDER AND PISTON ..... 4-30
CHECKING THE PISTON RINGS ..... 4-32
CHECKING THE PISTON PIN ..... 4-33
INSTALLING THE PISTON AND CYLINDER ..... 4-33

**RECOIL STARTER AND AC MAGNETO ROTOR** ..... 4-35
REMOVING THE AC MAGNETO ROTOR ..... 4-39
DISASSEMBLING THE RECOIL STARTER ..... 4-39
CHECKING THE STATOR COIL AND PICKUP COIL ..... 4-39
CHECKING THE STARTER CLUTCH ..... 4-40
CHECKING THE STARTER PULLEY ..... 4-40
CHECKING THE RECOIL STARTER ..... 4-41
ASSEMBLING THE RECOIL STARTER ..... 4-41
INSTALLING THE AC MAGNETO ROTOR ..... 4-43

**SHIFT SHAFT** ..... 4-44
CHECKING THE SHIFT SHAFT ..... 4-46
CHECKING THE STOPPER LEVER ..... 4-46
CHECKING THE SHIFT GUIDES ..... 4-46
CHECKING THE SHIFT DRUM SEGMENT ..... 4-46
INSTALLING THE SHIFT SHAFT ..... 4-47

**CLUTCH** ..... 4-49
REMOVING THE CLUTCH ..... 4-52
CHECKING THE PRIMARY CLUTCH ..... 4-53
CHECKING THE SECONDARY CLUTCH ..... 4-55
CHECKING THE PUSH RODS ..... 4-55
CHECKING THE FRICTION PLATES ..... 4-56
CHECKING THE CLUTCH PLATES ..... 4-56
CHECKING THE CLUTCH SPRINGS ..... 4-57
INSTALLING THE CLUTCH ..... 4-57

**BALANCER GEARS AND OIL PUMP** ..... 4-61
OIL PUMP ..... 4-63
REMOVING THE BALANCER DRIVEN GEAR ..... 4-64
REMOVING THE OIL PUMP DRIVE GEAR AND BALANCER DRIVE GEAR ..... 4-64
CHECKING THE OIL PUMP ..... 4-64
CHECKING THE OIL PUMP DRIVE GEAR AND OIL PUMP DRIVEN GEAR ..... 4-65
CHECKING THE BALANCER DRIVE GEAR AND BALANCER DRIVEN GEAR ..... 4-66
INSTALLING THE BALANCER DRIVE GEARS AND OIL PUMP ..... 4-66

**CRANKCASE** ..... 4-68
CRANKCASE BEARINGS ..... 4-70
SEPARATING THE CRANKCASE ..... 4-71
CHECKING THE OIL STRAINER AND OIL DELIVERY PIPE ..... 4-71
CHECKING THE TIMING CHAIN AND GUIDE ..... 4-72
CHECKING THE BEARINGS AND OIL SEALS ..... 4-72
CHECKING THE CRANKCASE ..... 4-72
ASSEMBLING THE CRANKCASE ..... 4-73

**CRANKSHAFT** ..... 4-75
CRANKSHAFT AND BALANCER ..... 4-75
REMOVING THE CRANKSHAFT ..... 4-76
CHECKING THE CRANKSHAFT ..... 4-76
INSTALLING THE CRANKSHAFT ..... 4-77

**TRANSMISSION** ..... 4-78
CHECKING THE SHIFT FORKS ..... 4-80
CHECKING THE SHIFT DRUM ASSEMBLY ..... 4-80
CHECKING THE TRANSMISSION ..... 4-81
ASSEMBLING THE MAIN AXLE AND DRIVE AXLE ..... 4-82
INSTALLING THE TRANSMISSION ..... 4-82

**MIDDLE GEAR** ..... 4-84
MIDDLE DRIVE PINION GEAR SHAFT ..... 4-84
MIDDLE DRIVEN SHAFT ..... 4-86
REMOVING THE MIDDLE DRIVE PINION GEAR SHAFT ..... 4-88
REMOVING THE MIDDLE DRIVEN SHAFT ..... 4-88
CHECKING THE PINION GEARS ..... 4-91
SELECTING THE MIDDLE DRIVE AND DRIVEN GEAR SHIMS ..... 4-92
INSTALLING THE MIDDLE DRIVEN SHAFT ..... 4-95
INSTALLING THE MIDDLE DRIVE PINION GEAR SHAFT ..... 4-98
MEASURING THE MIDDLE GEAR BACKLASH ..... 4-98

# CHAPTER 5
# CARBURETOR

**CARBURETOR**.....5-1
DISASSEMBLING THE CARBURETOR.....5-5
CHECKING THE CARBURETOR.....5-5
ASSEMBLING THE CARBURETOR.....5-7
ADJUSTING THE FUEL LEVEL.....5-8

# CHAPTER 6
# DRIVE TRAIN

**TROUBLESHOOTING**.....6-1
CHECKING NOISES.....6-1
TROUBLESHOOTING CHART.....6-3

**FRONT CONSTANT VELOCITY JOINTS AND DIFFERENTIAL GEAR**.....6-4
DISASSEMBLING THE UNIVERSAL JOINT.....6-10
REMOVING THE FRONT CONSTANT VELOCITY JOINTS.....6-11
REMOVING THE DIFFERENTIAL GEARS.....6-12
CHECKING THE FRONT CONSTANT VELOCITY JOINTS.....6-12
CHECKING THE DIFFERENTIAL GEARS.....6-13
CHECKING THE DIFFERENTIAL GEAR MOTOR.....6-13
ASSEMBLING THE FRONT CONSTANT VELOCITY JOINTS.....6-14
ASSEMBLING THE DIFFERENTIAL GEAR.....6-17
MEASURING THE DIFFERENTIAL GEAR LASH.....6-18
ADJUSTING THE DIFFERENTIAL GEAR LASH.....6-19
ASSEMBLING THE UNIVERSAL JOINT.....6-20
CHECKING THE DIFFERENTIAL GEAR OPERATION.....6-21

**REAR CONSTANT VELOCITY JOINTS AND FINAL DRIVE GEAR**.....6-22
REMOVING THE REAR CONSTANT VELOCITY JOINTS.....6-28
ASSEMBLING THE REAR CONSTANT VELOCITY JOINTS.....6-29
DISASSEMBLING THE FINAL DRIVE GEAR.....6-31
CHECKING THE DRIVE SHAFT/UNIVERSAL JOINT YOKE.....6-31
CHECKING THE FINAL DRIVE GEAR.....6-32
DISASSEMBLING THE FINAL DRIVE PINION GEAR AND BEARING.....6-32
INSTALLING THE FINAL DRIVE PINION GEAR AND BEARING.....6-32
POSITIONING THE FINAL DRIVE PINION GEAR AND RING GEAR.....6-33
MEASURING THE RING GEAR THRUST CLEARANCE.....6-33
MEASUREMENT THE FINAL GEAR LASH.....6-34
ADJUSTING THE FINAL GEAR LASH.....6-35
ASSEMBLING THE FINAL DRIVE GEAR.....6-36
INSTALLING THE FINAL GEAR CASE.....6-38

# CHAPTER 7
# CHASSIS

**FRONT AND REAR WHEELS** ..... 7-1
FRONT WHEELS ..... 7-1
REAR WHEELS ..... 7-3
CHECKING THE WHEELS ..... 7-4
CHECKING THE WHEEL HUBS ..... 7-4
CHECKING THE BRAKE DISCS ..... 7-5
INSTALLING THE BRAKE DISCS ..... 7-5
INSTALLING THE WHEEL HUBS ..... 7-6
INSTALLING THE WHEELS ..... 7-6

**FRONT BRAKE** ..... 7-7
FRONT BRAKE PADS ..... 7-7
REPLACING THE FRONT BRAKE PADS ..... 7-8
FRONT BRAKE MASTER CYLINDER ..... 7-10
CHECKING THE MASTER CYLINDER ..... 7-12
ASSEMBLING THE FRONT BRAKE MASTER CYLINDER ..... 7-12
INSTALLING THE FRONT BRAKE MASTER CYLINDER ..... 7-13
FRONT BRAKE CALIPERS ..... 7-15
DISASSEMBLING THE FRONT BRAKE CALIPERS ..... 7-17
CHECKING THE FRONT BRAKE CALIPERS ..... 7-17
ASSEMBLING THE FRONT BRAKE CALIPERS ..... 7-18
INSTALLING THE FRONT BRAKE CALIPERS ..... 7-19

**REAR BRAKE** ..... 7-21
REAR BRAKE LEVER ..... 7-21
BRAKE PEDAL ..... 7-22
FINAL GEAR CASE (REAR BRAKE) ..... 7-23
CHECKING THE FRICTION PLATES ..... 7-25
CHECKING THE REAR BRAKE PLATES ..... 7-25
CHECKING THE REAR BRAKE SPRINGS ..... 7-26
CHECKING THE PRESSURE PLATE ..... 7-26
CHECKING THE RING GEAR ..... 7-26

**STEERING SYSTEM** ..... 7-27
HANDLEBAR ..... 7-27
REMOVING THE FRONT BRAKE LIGHT SWITCH AND REAR BRAKE LEVER LIGHT SWITCH ..... 7-29
REMOVING THE HANDLEBAR GRIPS ..... 7-29
CHECKING THE HANDLEBAR ..... 7-29
INSTALLING THE HANDLEBAR ..... 7-30
INSTALLING THE HANDLEBAR GRIPS ..... 7-30
INSTALLING THE REAR BRAKE LEVER ..... 7-31
INSTALLING THE BRAKE MASTER CYLINDER ASSEMBLY ..... 7-31
STEERING STEM ..... 7-32
REMOVING THE BEARING RETAINER ..... 7-34
CHECKING THE STEERING STEM ..... 7-34
INSTALLING THE BEARING RETAINER ..... 7-34
INSTALLING THE CABLE GUIDE ..... 7-34
TIE RODS AND STEERING KNUCKLES ..... 7-35
REMOVING THE STEERING KNUCKLES ..... 7-37
CHECKING THE TIE RODS ..... 7-37
CHECKING THE STEERING KNUCKLES ..... 7-37
INSTALLING THE TIE RODS ..... 7-40

**FRONT ARMS AND FRONT SHOCK ABSORBERS** ..... 7-41
REMOVING THE FRONT ARMS ..... 7-43
CHECKING THE FRONT ARMS ..... 7-43
CHECKING THE FRONT SHOCK ABSORBERS ..... 7-45
INSTALLING THE FRONT ARMS AND FRONT SHOCK ABSORBERS ..... 7-46

**REAR KNUCKLES AND STABILIZER** ..... 7-47
CHECKING THE REAR KNUCKLES ..... 7-48
CHECKING THE STABILIZER ..... 7-48

**REAR ARMS AND REAR SHOCK ABSORBERS** ..... 7-49
CHECKING THE REAR ARMS ..... 7-50
CHECKING THE REAR SHOCK ABSORBERS ..... 7-50
INSTALLING THE REAR ARMS AND REAR SHOCK ABSORBERS ..... 7-51

# CHAPTER 8
# ELECTRICAL

**ELECTRICAL COMPONENTS** ..... 8-1

**CHECKING SWITCH CONTINUITY** ..... 8-3

**CHECKING THE SWITCHES** ..... 8-5

**CHECKING THE BULBS AND BULB SOCKETS** ..... 8-7
TYPES OF BULBS ..... 8-7
CHECKING THE CONDITION OF THE BULBS ..... 8-8
CHECKING THE CONDITION OF THE BULB SOCKETS ..... 8-9

**IGNITION SYSTEM** ..... 8-10
CIRCUIT DIAGRAM ..... 8-10
TROUBLESHOOTING ..... 8-11

**ELECTRIC STARTING SYSTEM** ..... 8-16
CIRCUIT DIAGRAM ..... 8-16
STARTING CIRCUIT OPERATION ..... 8-17
TROUBLESHOOTING ..... 8-18

**STARTER MOTOR** ..... 8-21
CHECKING THE STARTER MOTOR ..... 8-22
ASSEMBLING THE STARTER MOTOR ..... 8-24

**CHARGING SYSTEM** ..... 8-25
CIRCUIT DIAGRAM ..... 8-25
TROUBLESHOOTING ..... 8-26

**LIGHTING SYSTEM** ..... 8-28
CIRCUIT DIAGRAM ..... 8-28
TROUBLESHOOTING ..... 8-29
CHECKING THE LIGHTING SYSTEM ..... 8-30

**SIGNALING SYSTEM** ..... 8-33
CIRCUIT DIAGRAM ..... 8-33
TROUBLESHOOTING ..... 8-35
CHECKING THE SIGNALING SYSTEM ..... 8-36

**COOLING SYSTEM** ..... 8-45
CIRCUIT DIAGRAM ..... 8-45
TROUBLESHOOTING ..... 8-46

**2WD/4WD SELECTING SYSTEM** ..... 8-50
CIRCUIT DIAGRAM ..... 8-50
TROUBLESHOOTING ..... 8-51

**CARBURETOR WARMING SYSTEM** ..... 8-55
CIRCUIT DIAGRAM ..... 8-55
TROUBLESHOOTING ..... 8-56

# CHAPTER 9
# TROUBLESHOOTING


**STARTING FAILURE/HARD STARTING** ..... 9-1
FUEL SYSTEM ..... 9-1
ELECTRICAL SYSTEM ..... 9-1
COMPRESSION SYSTEM ..... 9-2

**POOR IDLE SPEED PERFORMANCE** ..... 9-2
POOR IDLE SPEED PERFORMANCE ..... 9-2

**POOR MEDIUM AND HIGH-SPEED PERFORMANCE** ..... 9-2
POOR MEDIUM AND HIGH-SPEED PERFORMANCE ..... 9-2

**FAULTY DRIVE TRAIN** ..... 9-3

**FAULTY GEAR SHIFTING** ..... 9-4
HARD SHIFTING ..... 9-4
SHIFT LEVER DOES NOT MOVE ..... 9-4
JUMPS OUT OF GEAR ..... 9-4

**FAULTY CLUTCH PERFORMANCE** ..... 9-4
ENGINE OPERATES BUT VEHICLE WILL NOT MOVE ..... 9-4
CLUTCH SLIPPING ..... 9-4
POOR STARTING PERFORMANCE ..... 9-4

**OVERHEATING** ..... 9-5
OVERHEATING ..... 9-5

**FAULTY BRAKE** ..... 9-5
POOR BRAKING EFFECT ..... 9-5

**SHOCK ABSORBER MALFUNCTION** ..... 9-5
MALFUNCTION ..... 9-5

**UNSTABLE HANDLING** ..... 9-6
UNSTABLE HANDLING ..... 9-6

**LIGHTING SYSTEM** ..... 9-6
HEADLIGHT DOES NOT COME ON ..... 9-6
BULB BURNT OUT ..... 9-6
TAIL/BRAKE LIGHT DOES NOT LIGHT ..... 9-6
TAIL/BRAKE LIGHT BULB BURNT OUT ..... 9-6

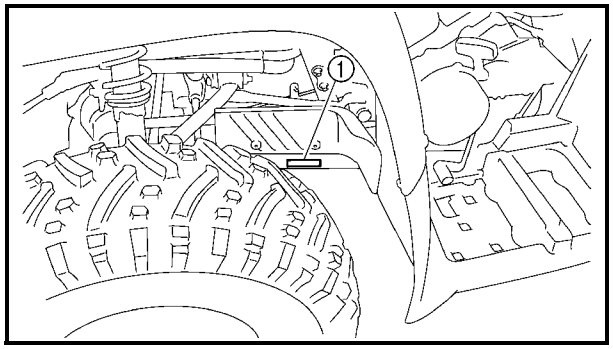


EBS00009

# GENERAL INFORMATION

## VEHICLE IDENTIFICATION

EBS00010

### VEHICLE IDENTIFICATION NUMBER

The vehicle identification number ① is stamped into the front left side of the frame.

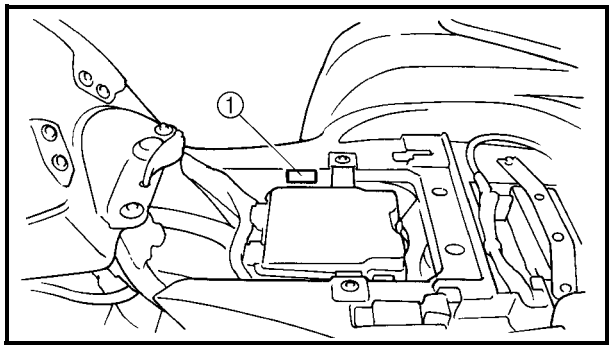


EBS00011

### MODEL LABEL

The model label ① is affixed at the location in the illustration. This information will be needed to order spare parts.

EAS20170

# FEATURES

## WET MULTIPLE DISC BRAKE

This ATV is equipped with a wet, multiple-disc type rear brake, which is located inside of the final gear case.

This new, completely sealed, wet multiple-disc brake is encased in oil for sure stopping power in virtually all conditions.

The sealed system keeps contaminants like mud and water away from the binders, delivering outstanding durability and brake performance.

Use only the specified oil, Yamaha Friction Modified Shaft Drive Gear Oil, in the final gear case.



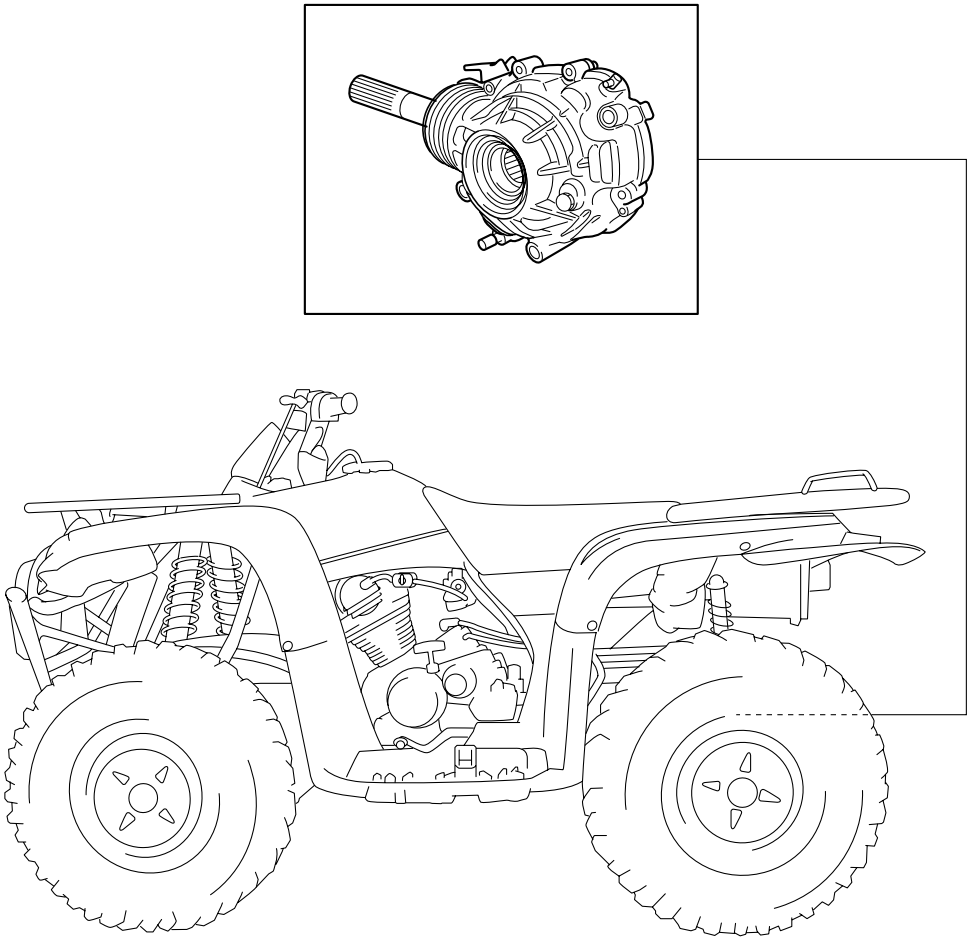

EBS00013

# IMPORTANT INFORMATION

## PREPARATION FOR REMOVAL AND DISASSEMBLY

1. Before removal and disassembly remove all dirt, mud, dust and foreign material.
2. Use only the proper tools and cleaning equipment.
   Refer to “SPECIAL TOOLS”.
3. When disassembling always keep mated parts together. This includes gears, cylinders, pistons and other parts that have been “mated” through normal wear. Mated parts must always be reused or replaced as an assembly.
4. During disassembly, clean all of the parts and place them in trays in the order of disassembly. This will speed up assembly and allow for the correct installation of all parts.
5. Keep all parts away from any source of fire.

EBS00014

## REPLACEMENT PARTS

1. Use only genuine Yamaha parts for all replacements. Use oil and grease recommended by Yamaha for all lubrication jobs. Other brands may be similar in function and appearance, but inferior in quality.

EBS00015

## GASKETS, OIL SEALS AND O-RINGS

1. When overhauling the engine, replace all gaskets, seals and O-rings. All gasket surfaces, oil seal lips and O-rings must be cleaned.
2. During reassembly properly oil all mating parts and bearings, and lubricate the oil seal lips with grease.

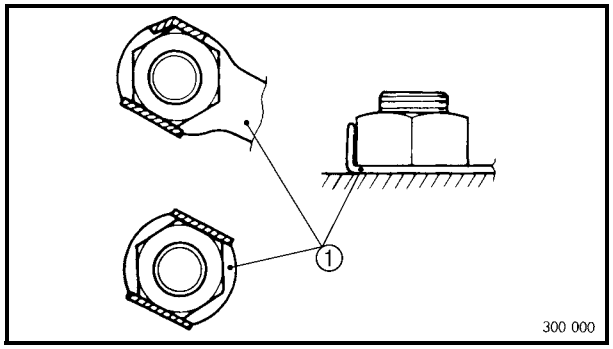


EBS00016

### LOCK WASHERS/PLATES AND COTTER PINS

After removal, replace all lock washers/plates ① and cotter pins. After the bolt or nut has been tightened to specification, bend the lock tabs along a flat of the bolt or nut.

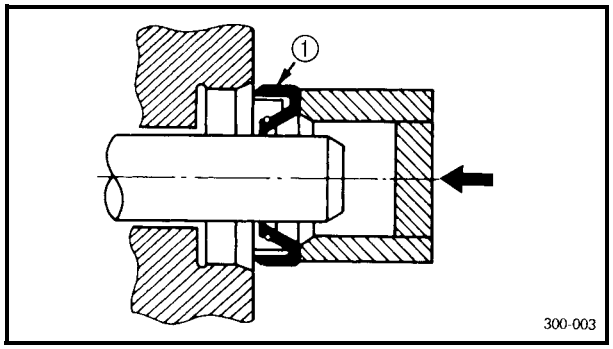


EBS00017

### BEARINGS AND OIL SEALS

Install bearings and oil seals so that the manufacturer's marks or numbers are visible. When installing oil seals, lubricate the oil seal lips with a light coat of lithium-soap-based grease. Oil bearings liberally when installing, if appropriate.

① Oil seal

**CAUTION:**

**Do not spin the bearing with compressed air because this will damage the bearing surfaces.**

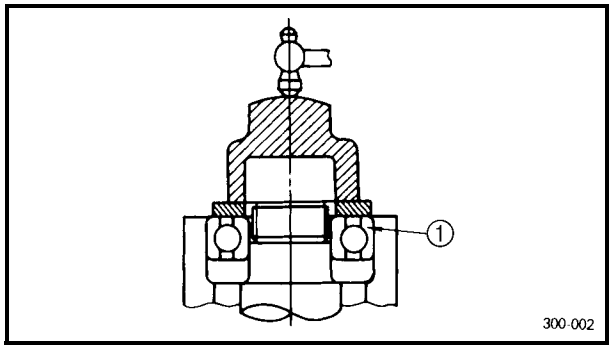


① Bearing

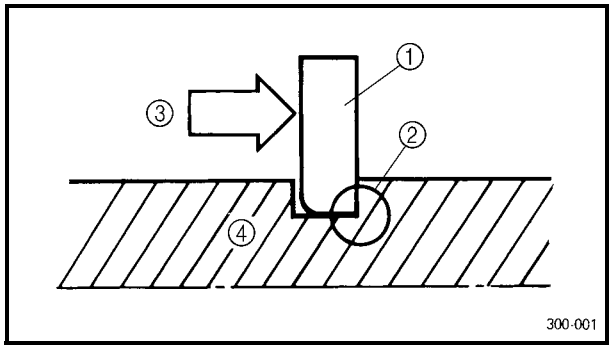


EBS00018

### CIRCLIPS

Before reassembly, check all circlips carefully and replace damaged or distorted circlips. Always replace piston pin clips after one use. When installing a circlip ①, make sure the sharp-edged corner ② is positioned opposite the thrust ③ that the circlip receives.

④ Shaft

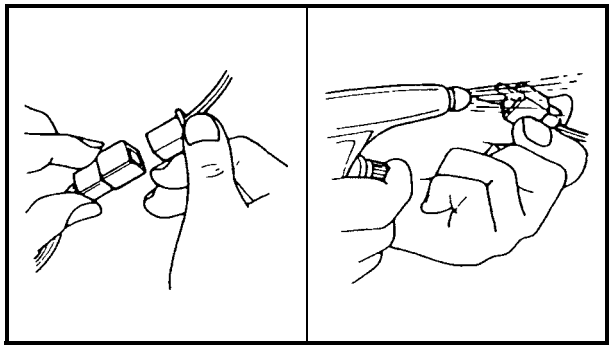

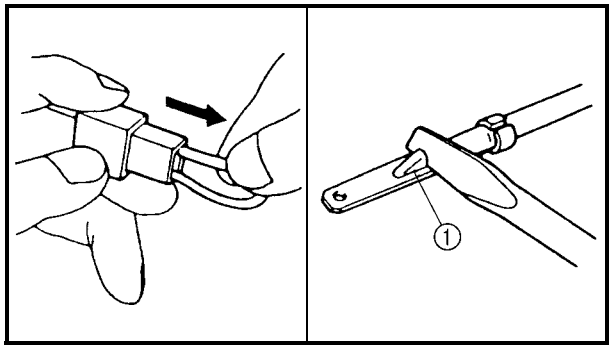


EBS00019

**CHECKING THE CONNECTIONS**

Check the leads, couplers, and connectors for stains, rust, moisture, etc.

1. Disconnect:
   - lead
   - coupler
   - connector
2. Check:
   - lead
   - coupler
   - connector
     Moisture → Dry with an air blower.
     Rust/stains → Connect and disconnect several times.
3. Check:
   - all connections
     Loose connection → Connect properly.

**NOTE:**

If the pin ① on the terminal is flattened, bend it up.

4. Connect:
   - lead
   - coupler
   - connector

**NOTE:**

Make sure all connections are tight.

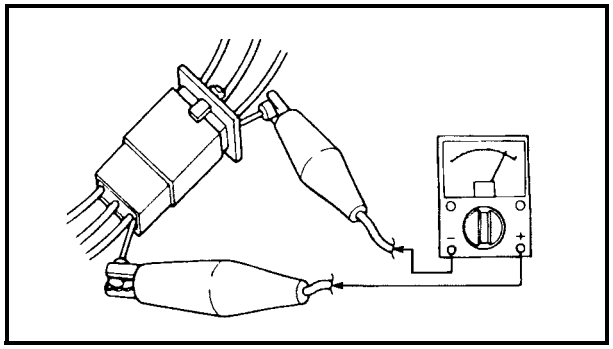

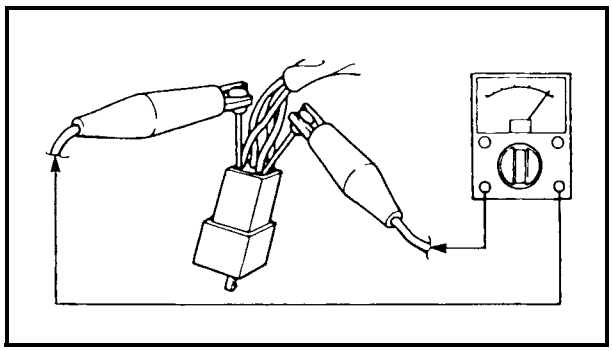

5. Check:
   - continuity (with the pocket tester)

**Pocket tester**
**90890-03112**
**Analog pocket tester**
**YU-03112-C**

**NOTE:**

- If there is no continuity, clean the terminals.
- When checking the wire harness, perform steps (1) to (3).
- As a quick remedy, use a contact revitalizer available at most part stores.

EBS00021

# SPECIAL TOOLS

The following special tools are necessary for complete and accurate tune-up and assembly. Use only the appropriate special tools; this will help prevent damage caused by the use of inappropriate tools or improvised techniques. Special tools may differ by shape and part number from country to country. In such a case, two types are provided.
When placing an order, refer to the list provided below to avoid any mistakes.
For US and CDN
P/N. YM-, YU-, YS-, YK-, ACC-
Except for US and CDN
P/N. 90890-

| Tool No. | Tool name/How to use | Illustration |
|---|---|---|
| 90890-01083<br>YU-01083-1 | Slide hammer bolt<br>Slide hammer bolt 6 mm<br><br>This tool is used to remove the rocker arm shaft. | 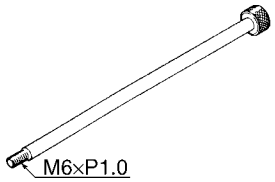 |
| 90890-01084<br>YU-01083-3 | Weight<br><br>This tool is used to remove the rocker arm shaft. | 90890-01084<br> 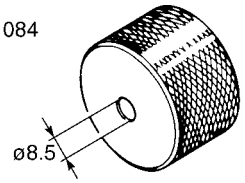 <br>YU-01083-3<br> 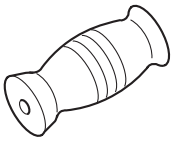 |
| 90890-01085<br>YU-01083-2 | Slide hammer bolt<br>Slide hammer bolt 8 mm<br><br>This tool is used when removing the crankshaft. | 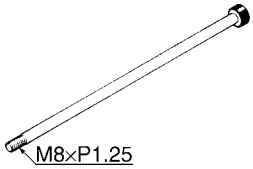 |
| 90890-01135<br>YU-01135-B | Crankcase separating tool<br>Crankcase separator<br><br>This tool is used to separate the crankcase. | 90890-01135<br> 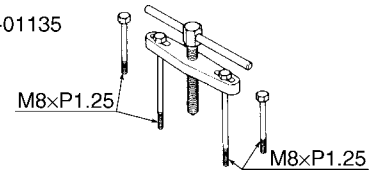 <br>YU-01135-B<br> 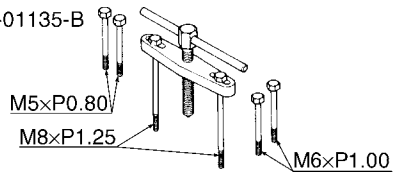 |
| 90890-01225<br>YM-01225-A | Valve guide remover (7.0 mm)<br><br>This tool is needed to remove and install the valve guides. | 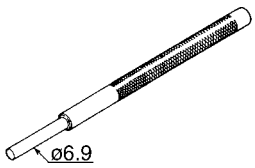 |

| Tool No. | Tool name/How to use | Illustration |
|---|---|---|
| 90890-01227<br>YM-01227 | Valve guide reamer (7.0 mm)<br><br>This tool is needed to rebore the new valve guides. | 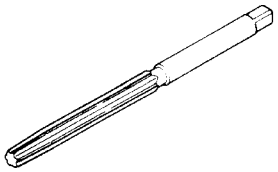 |
| 90890-01235<br>YU-01235 | Rotor holding tool<br>Universal magneto & rotor holder<br>This tool is needed to hold the starter pulley when removing/installing the starter pulley bolt or camshaft sprocket bolts. | 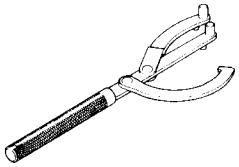 |
| 90890-01275<br>YU-90060 | Crankshaft installer bolt<br>Bolt<br><br>This tool is used to install the crankshaft. | 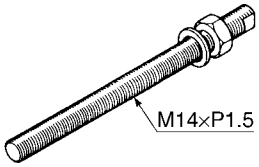 |
| 90890-01304<br>YU-01304 | Piston pin puller set<br>Piston pin puller<br><br>This tool is used to remove the piston pin. | 90890-01304<br> 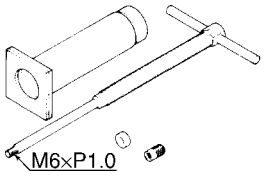 <br>YU-01304<br> 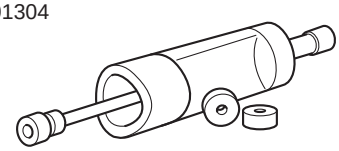 |
| 90890-01312<br>YM-01312-A | Fuel level gauge<br><br>This gauge is used to measure the fuel level in the float chamber. | |
| 90890-01327<br>YM-01327 | Damper rod holder (30 mm)<br><br>This tool is needed to loosen and tighten the steering stem bearing retainer. | 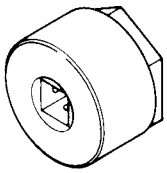 |
| 90890-01404<br>YM-01404 | Flywheel puller<br><br>This tool is used to remove the AC magneto rotor. | 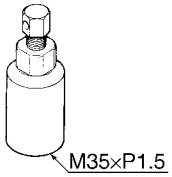 |
| 90890-01430<br>YM-38404 | Ring nut wrench<br><br>This tool is needed to remove and install the middle driven shaft bearing retainer. | 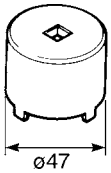 |

| Tool No. | Tool name/How to use | Illustration |
|---|---|---|
| 90890-01467<br>YM-01467 | Gear lash measurement tool<br><br>This tool is used to measure the gear lash. | 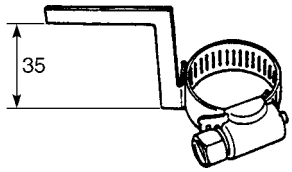 |
| 90890-01474<br>YM-01474 | Ball joint remover<br><br>These tools are used to remove or install the ball joints. | 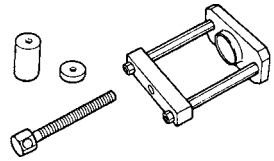 |
| 90890-01475<br>YM-01475 | Gear lash measurement tool<br>Middle drive gear lash tool<br><br>This tool is used to measure the gear lash. | 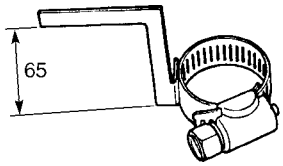 |
| 90890-01477<br>YM-01477 | Ball joint remover/installer attachment set<br><br>This tool is used to remove and install the ball joints. | |
| 90890-01530<br>YM-01530 | Ring gear fix bolt (M12)<br><br>This tool is used to measure the gear lash. | 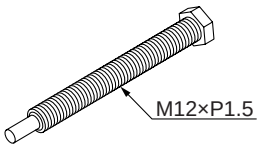 |
| 90890-01701<br>YS-01880-A | Sheave holder<br>Primary clutch holder<br>This tool is needed to hold the primary sheave when removing or installing the sheave nuts. | 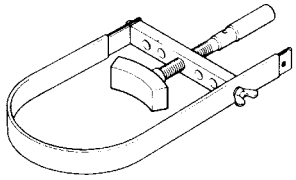 |
| 90890-03079<br>YM-34483 | Thickness gauge<br>Narrow gauge set<br><br>This tool is used to measure the valve clearance. | 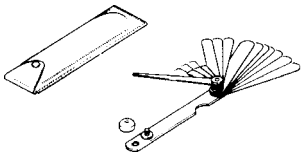 |
| 90890-03081<br>YU-33223 | Compression gauge<br>Engine compression tester<br><br>This tool is needed to measure engine compression. | 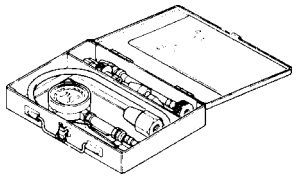 |
| 90890-03112<br>YU-03112-C | Pocket tester<br>Analog pocket tester<br><br>This instrument is needed for checking the electrical systems. | 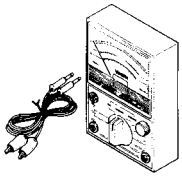 |

| Tool No. | Tool name/How to use | Illustration |
|---|---|---|
| 90890-03141<br>YU-03141 | Timing light<br>Inductive clamp timing light<br><br>This tool is necessary for checking ignition timing. | 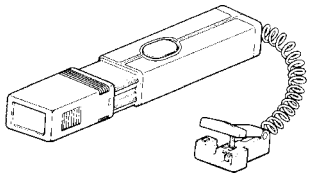 |
| 90890-04017<br>YM-04017 | Valve guide installer (ø7.0)<br>Valve guide installer (7.0 mm)<br><br>This tool is needed to install the valve guides. | 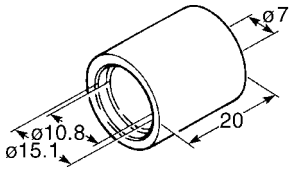 |
| 90890-04019<br>YM-04019 | Valve spring compressor<br><br>This tool is used to remove or install the valve assemblies. | 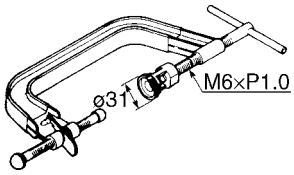 |
| Adapter<br>YM-33279<br>Spacer<br>90890-04060<br>YM-90070-A | Adapter #11<br>Pot spacer<br><br>These tools are used to install the crankshaft. | |
| 90890-04062<br>YM-04062 | Universal joint holder<br><br>This tool is needed when removing or installing the universal joint yoke nut. | 90890-04062<br> 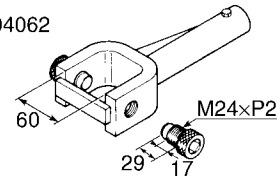 <br>YM-04062<br> 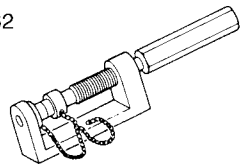 |
| 90890-04081<br>YM-91044 | Spacer (crankshaft installer)<br>Pot spacer<br><br>This tool is used to install the crankshaft. | 90890-04081<br> 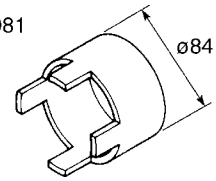 <br>YM-91044<br> 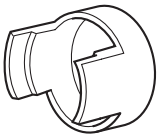 |
| 90890-04082 | Extension<br><br>This tool is used to measure engine compression. | 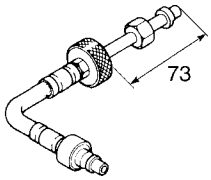 |

| Tool No. | Tool name/How to use | Illustration |
|---|---|---|
| 90890-04086<br>YM-91042 | Universal clutch holder<br><br>This tool is needed to hold the clutch carrier when removing or installing the carrier nut. | 90890-04086<br> 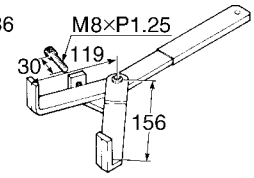 <br>YM-91042<br> 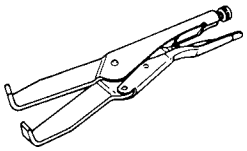 |
| 90890-04088 | Buffer boss installer set<br><br>These tools are used to install the crankshaft. | 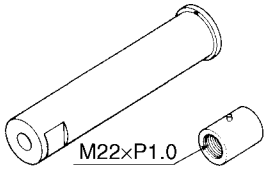 |
| 90890-04128<br>YM-04128 | Bearing retainer wrench<br>Middle gear bearing retainer<br><br>This tool is needed when removing or installing the bearing retainers. | 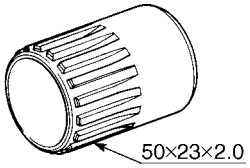 |
| 90890-04129<br>YM-04129 | Pinion gear fix clamp<br>Pinion gear clamp<br><br>This tool is used to hold the middle drive gear shaft. | 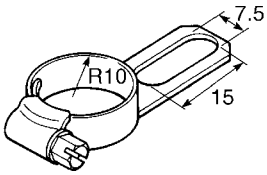 |
| 90890-04133<br>YM-08035-A | Tappet adjusting tool (4 mm)<br>Valve adjustment wrench 3 mm & 4 mm<br><br>This tool is necessary for adjusting the valve clearance. | 90890-04133<br> 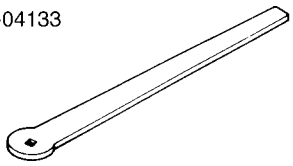 <br>YM-08035-A<br> 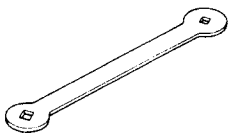 |
| 90890-06754<br>YM-34487 | Ignition checker<br>Opama pet-4000 spark checker<br><br>This instrument is necessary for checking the ignition system components. | 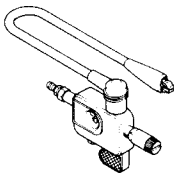 |
| 90890-06760<br>YU-39951-B | Digital tachometer<br><br>This tool is needed for checking engine rpm. | 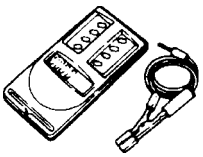 |

| Tool No. | Tool name/How to use | Illustration |
|---|---|---|
| 90890-85505 | Yamaha bond No. 1215<br>(Three bond No.1215®)<br><br>This bond is used on crankcase mating surfaces, etc. | 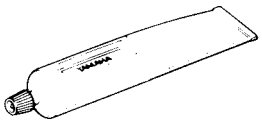 |
| YM-33280 | Pot extension<br><br>This tool is used to install the crankshaft. | 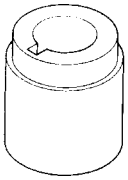 |
| YU-90050 | Crankshaft installer set<br><br>These tools are used to install the crank-shaft. | 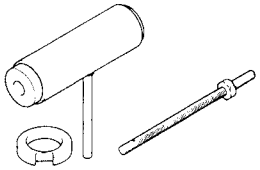 |

EBS01001

# SPECIFICATIONS

## GENERAL SPECIFICATIONS

| Item | Standard |
|---|---|
| **Model code** | 4S11<br>4S14 |
| **Dimensions** | |
| Overall length | 2,016 mm (79.4 in) |
| Overall width | 1,116 mm (43.9 in) |
| Overall height | 1,187 mm (46.7 in) |
| Seat height | 895 mm (35.2 in) |
| Wheelbase | 1,230 mm (48.4 in) |
| Minimum ground clearance | 267 mm (10.5 in) |
| Minimum turning radius | 3,200 mm (126.0 in) |
| **Basic weight** | |
| With oil and fuel | 285.0 kg (628 lb) |
| **Engine** | |
| Engine type | Air-cooled 4-stroke, SOHC |
| Cylinder arrangement | Forward-inclined single cylinder |
| Displacement | 387.0 $cm^3$ (23.62 cu. in) |
| Bore × stroke | 83.0 × 71.5 mm (3.27 × 2.81 in) |
| Compression ratio | 8.60 : 1 |
| Standard compression pressure (at sea level) | 920 kPa (9.21 $kgf/cm^2$, 130.9 psi) |
| Starting system | Electric and recoil starter |
| **Lubrication system** | Wet sump |
| **Oil type or grade** | |
| Engine oil | API service SG type or higher<br>JASO standard MA<br> 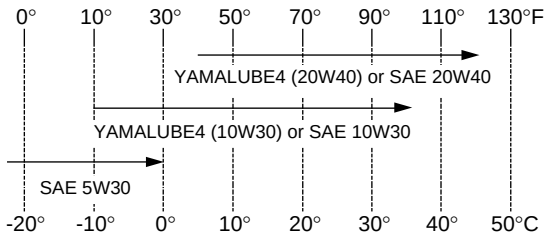 <br> |
| Final gear oil | Yamaha Friction Modified Shaft Drive Gear Oil (Part No.: ACC-SHAFT-LU-00) |
| Differential gear oil | Yamaha Friction Modified Shaft Drive Gear Oil (Part No.: ACC-SHAFT-LU-00) or SAE 80 API GL-4 Hypoid gear oil |

| Item | Standard |
|---|---|
| **Oil quantity** | |
| Engine oil | |
| Periodic oil change | 2.90 L (2.55 Imp qt, 3.07 US qt) |
| With oil filter replacement | 3.00 L (2.64 Imp qt, 3.17 US qt) |
| Total amount | 3.50 L (3.08 Imp qt, 3.70 US qt) |
| Final gear oil | |
| Periodic oil change | 0.50 L (0.44 Imp qt, 0.53 US qt) |
| Total amount | 0.53 L (0.47 Imp qt, 0.56 US qt) |
| Differential gear case oil | |
| Periodic oil change | 0.23 L (0.20 Imp qt, 0.24 US qt) |
| Total amount | 0.25 L (0.22 Imp qt, 0.26 US qt) |
| **Air filter** | Dry element |
| **Fuel** | |
| Type | Unleaded gasoline only |
| Fuel tank capacity | 15.0 L (3.30 Imp gal, 3.96 US gal) |
| Fuel reserve amount | 4.0 L (0.88 Imp gal, 1.06 US gal) |
| **Carburetor** | |
| Type/quantity | BSR33 × 1 |
| Manufacturer | MIKUNI |
| **Spark plug** | |
| Type/manufacturer | DR8EA/NGK |
| Spark plug gap | 0.6 ~ 0.7 mm (0.024 ~ 0.028 in) |
| **Clutch type** | Wet, centrifugal automatic |
| **Transmission** | |
| Primary reduction system | Spur gear |
| Primary reduction ratio | 76/24 (3.166) |
| Secondary reduction system | Shaft drive |
| Secondary reduction ratio | 28/24 × 24/18 × 33/9 (5.704) |
| Transmission type | Constant mesh, 5-speed forward, 1 speed reverse |
| Operation | Left foot operation |
| 1st | 40/12 (3.333) |
| 2nd | 34/18 (1.888) |
| 3rd | 30/22 (1.363) |
| 4th | 25/26 (0.962) |
| 5th | 19/27 (0.704) |
| Reverse gear | 22/17 × 35/15 (3.019) |

| Item | | Standard |
|---|---|---|
| **Chassis** | | |
| Frame type | | Steel tube frame |
| Caster angle | | 3.0° |
| Camber angle | | 2.0° |
| Kingpin angle | | 10.0° |
| Trail | | 17.0 mm (0.67 in) |
| Tread front (STD) | | 850.0 mm (33.46 in) |
| Tread rear (STD) | | 825.0 mm (32.48 in) |
| Toe-in (with tires touching the ground) | | 0 ~ 10.0 mm (0 ~ 0.39 in) |
| **Tire** | | |
| Type | front | Tubeless |
| | rear | Tubeless |
| Size | front | AT25 × 8-12 |
| | rear | AT25 × 10-12 |
| Manufacturer/model | front | ITP/MUDLIGHT |
| | rear | ITP/MUDLIGHT |
| **Tire pressure (cold tire)** | | |
| Maximum load* | | 210.0 kg (463 lb) |
| Off-road riding | front | 22 ~ 28 kPa (0.22 ~ 0.28 kg/cm$^2$, 3.2 ~ 4.1 psi) |
| | rear | 22 ~ 28 kPa (0.22 ~ 0.28 kg/cm$^2$, 3.2 ~ 4.1 psi) |
| *Load is total weight of cargo, rider, accessories, and tongue | | |
| **Brake** | | |
| Front brake | type | Dual disc brake |
| | operation | Right hand operation |
| Rear brake | type | Wet, multiple-disc brake |
| | operation | Left hand and right foot operation |
| **Suspension** | | |
| Front suspension | | Double wishbone |
| Rear suspension | | Double wishbone |
| **Shock absorber** | | |
| Front shock absorber | | Coil spring/oil damper |
| Rear shock absorber | | Coil spring/oil damper |
| **Wheel travel** | | |
| Front wheel travel | | 147 mm (5.8 in) |
| Rear wheel travel | | 192 mm (7.6 in) |
| **Electrical system** | | |
| Ignition system | | DC CDI |
| Generator system | | AC magneto |
| Battery type | | YTX14AH |
| Battery capacity | | 12 V 14.0 Ah |
| **Bulb type** | | Krypton bulb |

| Item | Standard |
|---|---|
| **Bulb voltage/wattage × quantity** | |
| Headlight | 12 V 30.0 W/30.0 W × 2 |
| Tail/brake light | 12 V 21.0/5.0 W × 1 |
| Indicator light | |
| Meter lighting | 12 V 1.7 W × 1 |
| Neutral indicator light | 12 V 1.7 W × 1 |
| Reverse indicator light | 12 V 1.7 W × 1 |
| Oil temperature warning light | 12 V 1.7 W × 1 |
| On-command four-wheel-drive indicator light | 12 V 1.7 W × 1 |
| Differential gear lock indicator light | 12 V 1.7 W × 1 |

EBS01002

# ENGINE SPECIFICATIONS

| Item | Standard | Limit |
|---|---|---|
| **Cylinder head** | | |
| Maximum warpage ∗ 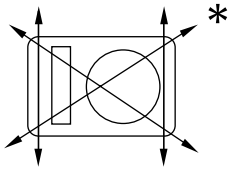 | ---- | 0.05 mm (0.0020 in) |
| **Cylinder** | | |
| Bore | 82.970 ~ 83.020 mm (3.2665 ~ 3.2685 in) | 83.150 mm (3.2736 in) |
| Measuring point ∗ 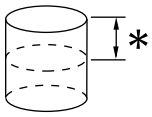 | 40.0 mm (1.57 in) | ---- |
| Maximum taper | ---- | 0.05 mm (0.0020 in) |
| Out-of-round | ---- | 0.05 mm (0.002 in) |
| **Camshaft** | | |
| Drive system | Chain drive (left) | ---- |
| Camshaft lobe dimensions 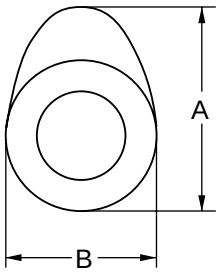 | | |
| Intake measurement “A” | 40.620 ~ 40.720 mm (1.5992 ~ 1.6031 in) | 40.52 mm (1.595 in) |
| “B” | 32.180 ~ 32.280 mm (1.2669 ~ 1.2709 in) | 32.08 mm (1.263 in) |
| Exhaust measurement “A” | 40.620 ~ 40.720 mm (1.5992 ~ 1.6031 in) | 40.52 mm (1.595 in) |
| “B” | 32.180 ~ 32.280 mm (1.2669 ~ 1.2709 in) | 32.08 mm (1.263 in) |
| Maximum camshaft runout 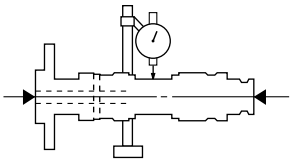 | ---- | 0.030 mm (0.0012 in) |

| Item | Standard | Limit |
|---|---|---|
| **Timing chain** | | |
| Model/number of links | BF05M/92 | ---- |
| Tensioning system | Automatic | ---- |
| **Rocker arm/rocker arm shaft** | | |
| Rocker arm inside diameter | 11.980 ~ 11.998 mm (0.4717 ~ 0.4724 in) | 12.058 mm (0.4747 in) |
| Shaft outside diameter | 11.961 ~ 11.971 mm (0.4709 ~ 0.4713 in) | 11.931 mm (0.4697 in) |
| Arm-to-shaft clearance | 0.009 ~ 0.037 mm (0.0004 ~ 0.0015 in) | 0.080 mm (0.0032 in) |
| Rocker-arm-to-rocker-arm-shaft clearance | 0.009 ~ 0.037 mm (0.0004 ~ 0.0015 in) | ---- |
| **Valve, valve seat, valve guide** | | |
| Valve clearance–intake (cold) | 0.06 ~ 0.10 mm (0.0024 ~ 0.0039 in) | ---- |
| Valve clearance–exhaust (cold) | 0.16 ~ 0.20 mm (0.0063 ~ 0.0079 in) | ---- |
| Valve dimensions | | |
| 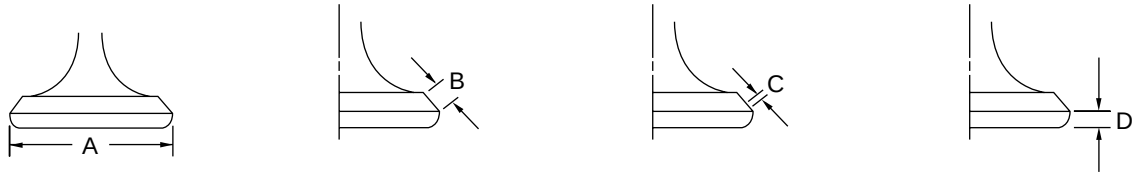  Head Diameter; Face Width; Seat Width; Margin Thickness | | |
| Valve head diameter “A” | | |
| Intake | 39.90 ~ 40.10 mm (1.5709 ~ 1.5787 in) | ---- |
| Exhaust | 33.90 ~ 34.10 mm (1.3346 ~ 1.3425 in) | ---- |
| Valve face width “B” | | |
| Intake | 2.26 mm (0.0890 in) | ---- |
| Exhaust | 2.26 mm (0.0890 in) | ---- |
| Valve seat width “C” | | |
| Intake | 1.20 ~ 1.40 mm (0.0472 ~ 0.0551 in) | 1.60 mm (0.0630 in) |
| Exhaust | 1.20 ~ 1.40 mm (0.0472 ~ 0.0551 in) | 1.60 mm (0.0630 in) |
| Valve margin thickness “D” | | |
| Intake | 1.00 ~ 1.40 mm (0.0394 ~ 0.0551 in) | ---- |
| Exhaust | 0.80 ~ 1.20 mm (0.0315 ~ 0.0472 in) | ---- |
| Valve stem diameter | | |
| Intake | 6.975 ~ 6.990 mm (0.2746 ~ 0.2752 in) | 6.950 mm (0.2736 in) |
| Exhaust | 6.955 ~ 6.970 mm (0.2738 ~ 0.2744 in) | 6.915 mm (0.2722 in) |
| Valve guide inside diameter | | |
| Intake | 7.000 ~ 7.012 mm (0.2756 ~ 0.2761 in) | 7.030 mm (0.2768 in) |
| Exhaust | 7.000 ~ 7.012 mm (0.2756 ~ 0.2761 in) | 7.030 mm (0.2768 in) |

| Item | Standard | Limit |
|---|---|---|
| Valve-stem-to-valve-guide clearance | | |
| Intake | 0.010 ~ 0.037 mm (0.0004 ~ 0.0015 in) | 0.080 mm (0.0031 in) |
| Exhaust | 0.025 ~ 0.052 mm (0.0010 ~ 0.0020 in) | 0.100 mm (0.0039 in) |
| Valve stem runout | ---- | 0.01 mm (0.00004 in) |
| Valve seat width | | |
| Intake | 1.20 ~ 1.40 mm (0.0472 ~ 0.0551 in) | 1.60 mm (0.0630 in) |
| Exhaust | 1.20 ~ 1.40 mm (0.0472 ~ 0.0551 in) | 1.60 mm (0.0630 in) |
| **Valve spring** | | |
| Inner spring | | |
| Free length | | |
| Intake | 39.90 mm (1.57 in) | 37.90 mm (1.49 in) |
| Exhaust | 39.90 mm (1.57 in) | 37.90 mm (1.49 in) |
| Installed length (valve closed) | | |
| Intake | 34.10 mm (1.34 in) | ---- |
| Exhaust | 34.10 mm (1.34 in) | ---- |
| Compressed spring force (installed) | | |
| Intake | 93 ~ 109 N (9.5 ~ 11.1 kgf, 20.94 ~ 24.47 lb) | ---- |
| Exhaust | 93 ~ 109 N (9.5 ~ 11.1 kgf, 20.94 ~ 24.47 lb) | ---- |
| Spring tilt * | | |
| Intake | ---- | 2.5°/1.70 mm (2.5°/0.067 in) |
| Exhaust | ---- | 2.5°/1.70 mm (2.5°/0.067 in) |

| Item | Standard | Limit |
|---|---|---|
| Winding direction (top view) | | |
| Intake | Counterclockwise | ---- |
| Exhaust | Counterclockwise | ---- |
| Outer spring | | |
| Free length | | |
| Intake | 43.27 mm (1.70 in) | 41.27 mm (1.62 in) |
| Exhaust | 43.27 mm (1.70 in) | 41.27 mm (1.62 in) |
| Installed length (valve closed) | | |
| Intake | 36.6 mm (1.44 in) | ---- |
| Exhaust | 36.6 mm (1.44 in) | ---- |
| Compressed spring force (installed) | | |
| Intake | 202 ~ 237 N (20.6 ~ 24.2 kgf, 45.41 ~ 53.35 lb) | ---- |
| Exhaust | 202 ~ 237 N (20.6 ~ 24.2 kgf, 45.41 ~ 53.35 lb) | ---- |
| Spring tilt * 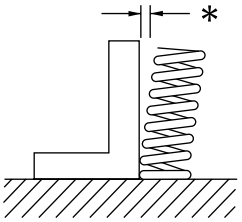 | | |
| Intake | ---- | 2.5°/1.9 mm (2.5°/0.075 in) |
| Exhaust | ---- | 2.5°/1.9 mm (2.5°/0.075 in) |
| Winding direction (top view) | | |
| Intake | Clockwise | ---- |
| Exhaust | Clockwise | ---- |

| Item | Standard | Limit |
|---|---|---|
| **Piston** | | |
| Piston-to-cylinder clearance | 0.040 ~ 0.060 mm (0.0016 ~ 0.0024 in) | 0.015 mm (0.0059 in) |
| Diameter “D” | 82.920 ~ 82.970 mm (3.2646 ~ 3.2665 in) | ---- |
| 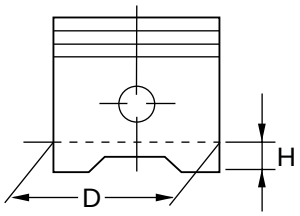  | | |
| Height “H” | 4.5 mm (0.18 in) | ---- |
| Offset | 0.50 mm (0.0197 in) | ---- |
| Offset direction | Intake side | ---- |
| Piston pin bore inside diameter | 19.004 ~ 19.015 mm (0.7482 ~ 0.7486 in) | 19.045 mm (0.7498 in) |
| Piston pin outside diameter | 18.990 ~ 18.995 mm (0.7476 ~ 0.7478 in) | 18.970 mm (0.7862 in) |
| Piston-pin-to-piston-pin-bore clearance | 0.009 ~ 0.025 mm (0.0004 ~ 0.0010 in) | 0.075 mm (0.0030 in) |
| **Piston rings** | | |
| Top ring | | |
| 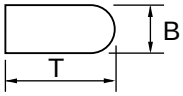  | | |
| Ring type | Barrel | ---- |
| Dimensions (B × T) | 1.20 × 3.30 mm (0.05 × 0.13 in) | ---- |
| End gap (installed) | 0.20 ~ 0.40 mm (0.008 ~ 0.016 in) | 0.50 mm (0.020 in) |
| Ring side clearance | 0.040 ~ 0.080 mm (0.0016 ~ 0.0032 in) | 0.12 mm (0.0047 in) |
| 2nd ring | | |
| 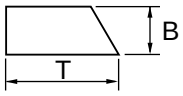  | | |
| Ring type | Taper | ---- |
| Dimensions (B × T) | 1.50 × 3.40 mm (0.06 × 0.13 in) | ---- |
| End gap (installed) | 0.20 ~ 0.40 mm (0.01 ~ 0.02 in) | 0.50 mm (0.0020 in) |
| Ring side clearance | 0.030 ~ 0.070 mm (0.0012 ~ 0.0028 in) | 0.12 mm (0.0047 in) |

| Item | Standard | Limit |
|---|---|---|
| Oil ring 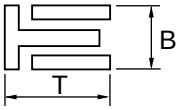  | | |
| Dimensions (B × T) | 2.80 × 2.80 mm (0.11 × 0.11 in) | ---- |
| End gap (installed) | 0.30 ~ 0.90 mm (0.01 ~ 0.04 in) | ---- |
| **Crankshaft** 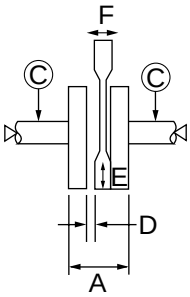  | | |
| Crank width “A” | 58.95 ~ 59.00 mm (2.321 ~ 2.323 in) | ---- |
| Maximum runout “C” | ---- | 0.060 mm (0.0024 in) |
| | | 0.03 mm (0.0012 in) |
| Big end side clearance “D” | 0.350 ~ 0.850 mm (0.0138 ~ 0.0335 in) | 1.0 mm (0.04 in) |
| Big end radial clearance “E” | 0.010 ~ 0.025 mm (0.0004 ~ 0.0010 in) | ---- |
| Small end free play “F” | 0.80 ~ 1.00 mm (0.03 ~ 0.04 in) | 2.0 mm (0.08 in) |
| **Balancer** | | |
| Balancer drive method | Gear | ---- |
| **Clutch** | | |
| Friction plate | | |
| Thickness | 2.94 ~ 3.06 mm (0.11 ~ 0.12 in) | 2.8 mm (0.110 in) |
| Quantity | 7 | ---- |
| Clutch plate 1 | | |
| Thickness | 1.50 ~ 1.70 mm (0.06 ~ 0.07 in) | ---- |
| Quantity | 4 | ---- |
| Max. warpage | ---- | 0.2 mm (0.0079 in) |
| Clutch plate 2 | | |
| Clutch plate thickness | 1.90 ~ 2.10 mm (0.07 ~ 0.08 in) | ---- |
| Plate quantity | 2 | ---- |

| Item | | Standard | Limit |
|---|---|---|---|
| Clutch spring | | | |
| Free length | | 40.1 mm (1.58 in) | 38.1 mm (1.50 in) |
| Quantity | | 5 | ---- |
| Minimum length | | 24.1 mm (0.95 in) | ---- |
| Clutch release method | | Inner push, cam push | ---- |
| **Automatic centrifugal clutch** | | | |
| Clutch shoe thickness | | 2.0 mm (0.08 in) | 1.5 mm (0.06 in) |
| Clutch shoe spring free length | | 42.5 mm (1.67 in) | ---- |
| Clutch-in revolution | | 1,900 r/min | ---- |
| Clutch-stall revolution | | 3,200 r/min | ---- |
| **Transmission** | | | |
| Maximum main axle runout | | ---- | 0.08 mm (0.0032 in) |
| Maximum drive axle runout | | ---- | 0.08 mm (0.0032 in) |
| **Shifting mechanism** | | | |
| Shift mechanism type | | Shift drum and guide bar | ---- |
| **Carburetor** | | | |
| I. D. mark | | 4S11 10 | ---- |
| Main jet | (M.J) | #112.5 | ---- |
| Main air jet | (M.A.J) | #70 | ---- |
| Jet needle | (J.N) | 5EP9-55-1 | ---- |
| Needle jet | (N.J) | P-OM (#826) | ---- |
| Pilot air jet 1 | (P.A.J.1) | #80 | ---- |
| Pilot air jet 2 | (P.A.J.2) | 1.3 | ---- |
| Pilot outlet | (P.O) | ø0.8 | ---- |
| Pilot jet | (P.J) | #17.5 | ---- |
| Bypass 1 | (B.P.1) | ø0.8 | ---- |
| Bypass 2 | (B.P.2) | ø0.8 | ---- |
| Bypass 3 | (B.P.3) | ø0.8 | ---- |
| Valve seat size | (V.S) | ø2.0 | ---- |
| Starter jet | (G.S.1) | #70 | ---- |
| Starter jet | (G.S.2) | 0.9 | ---- |
| Throttle valve size | | #100 | ---- |
| Float height | (F.H) | 13.0 mm (0.51 in) | ---- |
| Fuel level A (using a fuel level gauge) | | 4.0 ~ 5.0 mm (0.16 ~ 0.20 in) | ---- |
| Engine idle speed | | 1,450 ~ 1,550 r/min | ---- |
| Intake vacuum | | 33.3 kPa (250 mmHg, 9.8 inHg) | ---- |
| **Oil filter type** | | Wire mesh | ---- |

| Item | Standard | Limit |
|---|---|---|
| **Oil pump** | | |
| Oil pump type | Trochoid | ---- |
| Inner-rotor-to-outer-rotor-tip clearance | Less than 0.15 mm (0.0059 in) | 0.20 mm (0.0079 in) |
| Outer-rotor-to-oil-pump-housing clearance | 0.010 ~ 0.014 mm (0.0039 ~ 0.0055 in) | 0.21 mm (0.0083 in) |
| Oil-pump-housing-to-inner-and-outer-rotor clearance | 0.040 ~ 0.090 mm (0.0016 ~ 0.0035 in) | 0.16 mm (0.0062 in) |
| Bypass valve opening pressure | 40.0 ~ 80.0 kPa (0.40 ~ 0.80 kgf/cm$^2$, 5.8 ~ 11.6 psi) | ---- |
| Relief valve operating pressure | 60.0 kPa (0.60 kgf/cm$^2$, 8.7 psi) | ---- |
| Oil pressure (hot) | 8.0 kPa at 1,600 r/min (0.08 kg/cm$^2$ at 1,600 r/min, 1.2 psi at 1,600 r/min) | ---- |
| Pressure check location | Cylinder head | ---- |
| **Shaft drive** | | |
| Middle gear backlash | 0.10 ~ 0.30 mm (0.0039 ~ 0.0118 in) | ---- |
| Final gear backlash | 0.10 ~ 0.20 mm (0.0039 ~ 0.0079 in) | ---- |
| Differential gear backlash | 0.05 ~ 0.25 mm (0.0020 ~ 0.0098 in) | ---- |

**Crankcase tightening sequence**

Crankcase (left)

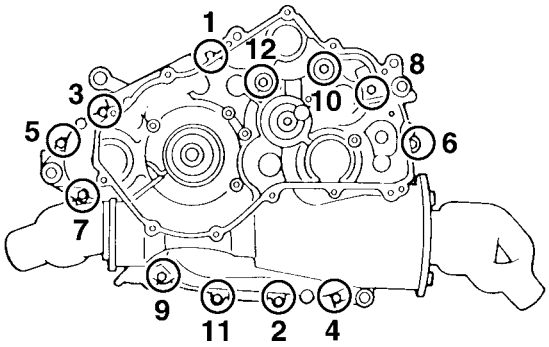


Crankcase (right)

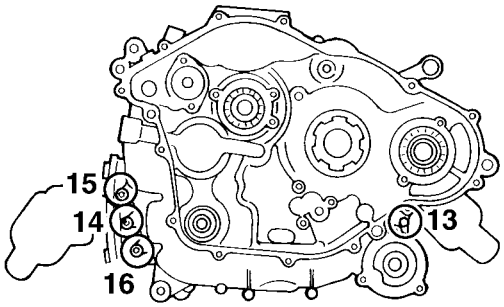


① ~ ⑬ : M6 bolts
⑭ ~ ⑯ : M8 bolts

**Cylinder head tightening sequence**

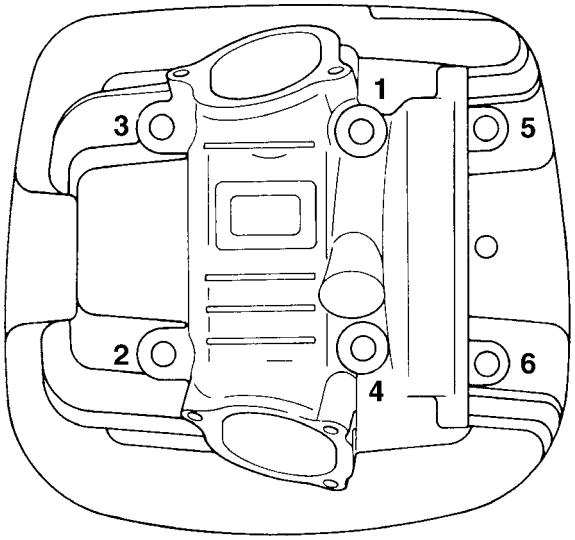

EBS01003

# CHASSIS SPECIFICATIONS

| Item | Standard | Limit |
|---|---|---|
| **Steering system** | | |
| Steering bearing type | Ball bearing | ---- |
| **Front suspension** | | |
| Shock absorber travel | 99.0 mm (3.90 in) | ---- |
| Spring free length | 300 mm (11.81 in) | ---- |
| Installed length | 240.5 mm (9.47 in) | ---- |
| Spring rate (K1) | 15.00 N/mm (1.53 kg/mm, 85.65 lb/in) | ---- |
| Spring stroke (K1) | 0 ~ 99.0 mm (0 ~ 3.90 in) | ---- |
| Optional spring available | No | ---- |
| **Rear suspension** | | |
| Shock absorber travel | 95.0 mm (3.74 in) | ---- |
| Spring free length | 278.0 mm (10.94 in) | ---- |
| Spring installed length | 249.5 mm (9.82 in) | ---- |
| Spring rate (K1) | 27.00 N/mm (2.75 kg/mm, 154.17 lb/in) | ---- |
| Spring stroke (K1) | 0 ~ 95.0 mm (0 ~ 3.74 in) | ---- |
| Optional spring available | No | ---- |
| **Front wheel** | | |
| Type | Panel wheel | ---- |
| Rim size | 12 × 6.0 AT | ---- |
| Rim material | Steel | ---- |
| Maximum radial wheel runout | ---- | 2.0 mm (0.08 in) |
| Maximum lateral wheel runout | ---- | 2.0 mm (0.08 in) |
| **Rear wheel** | | |
| Type | Panel wheel | ---- |
| Rim size | 12 × 7.5 AT | ---- |
| Rim material | Steel | ---- |
| Maximum radial wheel runout | ---- | 2.0 mm (0.08 in) |
| Maximum lateral wheel runout | ---- | 2.0 mm (0.08 in) |

| Item | Standard | Limit |
|---|---|---|
| **Front disc brake** | | |
| Type | Single | ---- |
| Disc outside diameter × thickness | 200.0 × 3.5 mm (7.87 × 0.14 in) | ---- |
| Brake disc minimum thickness | 3.5 mm (0.14 in) | ---- |
| Brake disc maximum deflection | 0.15 mm (0.0059 in) | ---- |
| Pad thickness inner | 4.5 mm (0.18 in) | 1.0 mm (0.04 in) |
| Pad thickness outer | 4.5 mm (0.18 in) | 1.0 mm (0.04 in) |
| Master cylinder inside diameter | 14.00 mm (0.55 in) | ---- |
| Caliper cylinder inside diameter | 32.00 mm (1.26 in) | ---- |
| Brake fluid type | DOT 4 | ---- |
| **Rear disc brake** | | |
| Type | Wet, multiple-disc brake | ---- |
| Friction plate thickness | 2.45 mm (0.096 in) | 2.22 mm (0.087 in) |
| Rear brake plate thickness | 2.29 mm (0.090 in) | 2.14 mm (0.084 in) |
| **Brake lever and brake pedal** | | |
| Front brake lever free play | 0 mm (0 in) | ---- |
| Rear brake lever free play | 8.0 ~ 10.5 mm (0.31 ~ 0.41 in) | ---- |
| Brake pedal position | 5.0 mm (0.20 in) | ---- |
| Brake pedal free play | 17 ~ 21 mm (0.67 ~ 0.83 in) | ---- |
| Throttle lever free play | 3.0 ~ 5.0 mm (0.12 ~ 0.20 in) | ---- |

EBS01004

# ELECTRICAL SPECIFICATIONS

| Item | Standard | Limit |
|---|---|---|
| **System voltage** | 12 V | ---- |
| **Ignition system** | | |
| Ignition timing (B.T.D.C.) | 10°/1,500 r/min | ---- |
| Advancer type | Digital | ---- |
| **Transistorized coil ignition** | | |
| Pick up coil resistance/color | 459 ~ 561 Ω at 20 °C (68 °F)/ white-red/white-green | ---- |
| **ECU** | | |
| Model/manufacturer | F8T40379/MITSUBISHI | ---- |
| **Ignition coil** | | |
| Model/manufacturer | 2JN/MORIC | ---- |
| Minimum ignition spark gap | 6.0 mm (0.24 in) | ---- |
| Primary coil resistance | 0.184 ~ 0.276 Ω at 20 °C (68 °F) | ---- |
| Secondary coil resistance | 6.32 ~ 9.48 kΩ at 20 °C (68 °F) | ---- |
| **Spark plug cap** | | |
| Material | Resin | ---- |
| Resistance | 10.0 kΩ | ---- |
| **AC magneto** | | |
| Model/manufacturer | F4T423/MITSUBISHI | ---- |
| Standard output | 14.0 V 15.0 A at 5,000 r/min | ---- |
| Stator coil resistance/color | 0.702 ~ 0.858 Ω at 20 °C (68 °F)/ white-white | ---- |
| **Rectifier/regulator** | | |
| Type | Semiconductor-short-circuit | ---- |
| Model/manufacturer | SH64E-11/SHINDENGEN | ---- |
| No load regulated voltage (DC) | 14.1 ~ 14.9 V | ---- |
| Rectifier capacity | 14.0 A | ---- |
| Withstand voltage | 200 V | ---- |
| **Electric starting system** | | |
| Type | Constant mesh | ---- |
| **Starter motor** | | |
| Model/manufacturer | DB4DY/DENSO | ---- |
| Power output | 0.70 kW | ---- |
| Armature coil resistance | 0.0117 ~ 0.0132 Ω at 20 °C (68 °F) | ---- |
| Brush overall length | 12.0 mm (0.47 in) | 8.50 mm (0.33 in) |
| Spring force | 6.38 ~ 9.32 N (651 ~ 950 gf, 22.97 ~ 33.55 oz) | ---- |
| Commutator diameter | 28.0 mm (1.10 in) | 27.0 mm (1.06 in) |
| Mica undercut | 0.40 ~ 0.80 mm (0.02 ~ 0.03 in) | ---- |

| Item | Standard | Limit |
|---|---|---|
| **Starter relay** | | |
| Model/manufacturer | MS5F-561/JIDECO | ---- |
| Amperage rating | 180.0 A | ---- |
| Coil winding resistance | 4.18 ~ 4.62 Ω at 20 °C (68 °F) | ---- |
| **Circuit breaker** | | |
| Circuit breaker type | Fuse | ---- |
| Fuses | | |
| Main fuse | 30.0 A | ---- |
| Headlight fuse | 15.0 A | ---- |
| Ignition fuse | 15.0 A | ---- |
| Auxiliary DC jack fuse | 10.0 A | ---- |
| Carburetor warmer fuse | 10.0 A | ---- |
| Four-wheel-drive motor fuse | 10.0 A | ---- |
| Spare fuse | 30.0 A | ---- |
| | 15.0 A | ---- |
| | 10.0 A | ---- |

EBS01005

# TIGHTENING TORQUES

## ENGINE TIGHTENING TORQUES

| Item | Part name | Thread size | Q'ty | Tightening torque | | | Remarks |
|---|---|---|---|---|---|---|---|
| | | | | Nm | m · kg | ft · lb | |
| Oil gallery bolt | Bolt | M6 | 1 | 7 | 0.7 | 5.1 | |
| Cylinder head (exhaust pipe) | Stud bolt | M6 | 2 | 7 | 0.7 | 5.1 | |
| Cylinder head | Bolt | M10 | 2 | 40 | 4.0 | 29 | E |
| | Bolt | M10 | 2 | 40 | 4.0 | 29 | E |
| | Bolt | M8 | 2 | 20 | 2.0 | 14 | |
| Breather plate | Bolt | M6 | 2 | 10 | 1.0 | 7.2 | |
| Bearing retainer (cylinder head) | Bolt | M6 | 2 | 8 | 0.8 | 5.8 | Use a lock washer. |
| Spark plug | — | M12 | 1 | 18 | 1.8 | 13 | |
| Cylinder | Bolt | M6 | 1 | 10 | 1.0 | 7.2 | LT |
| Tappet cover | Bolt | M6 | 5 | 10 | 1.0 | 7.2 | |
| Camshaft sprocket cover | Bolt | M6 | 2 | 10 | 1.0 | 7.2 | |
| AC magneto | Nut | M10 | 1 | 50 | 5.0 | 36 | |
| Balancer driven gear | Nut | M16 | 1 | 60 | 6.0 | 43 | Use a lock washer. |
| Valve adjusting screw | Nut | M7 | 2 | 20 | 2.0 | 14 | |
| Camshaft sprocket | Nut | M10 | 1 | 60 | 6.0 | 43 | |
| Timing chain tensioner cap | Bolt | M11 | 1 | 23 | 2.3 | 17 | |
| Timing chain tensioner | Bolt | M6 | 2 | 11 | 1.1 | 8 | |
| Timing chain guide (intake) | Bolt | M6 | 2 | 10 | 1.0 | 7.2 | |
| Oil pump assembly | Screw | M6 | 1 | 7 | 0.7 | 5.1 | |
| Oil pump | Screw | M6 | 2 | 8 | 0.8 | 5.8 | |
| Engine oil drain bolt | Bolt | M35 | 1 | 32 | 3.2 | 23 | |
| Oil filter cover joint nut | Nut | M14 | 2 | 50 | 5.0 | 36 | Yamaha bond No.1215 (Three bond No.1215®) |
| Oil delivery pipe 2 | Union bolt | M8 | 1 | 18 | 1.8 | 13 | |
| Oil cooler hose (engine side) | Nut | M16 | 2 | 35 | 3.5 | 25 | |
| Oil cooler hose (oil cooler side) | Nut | M16 | 2 | 21 | 2.1 | 15 | |
| Oil delivery pipe 1 | Union bolt | M8 | 2 | 16 | 1.6 | 11 | |
| Oil delivery pipe 3 | Bolt | M6 | 1 | 10 | 1.0 | 7.2 | |
| Carburetor joint (cylinder head side) | Bolt | M8 | 2 | 20 | 2.0 | 14 | |
| Carburetor joint (air filter side) | Bolt | M5 | 1 | 4 | 0.4 | 2.9 | |
| Bearing retainer (crankcase) | Screw | M6 | 4 | 8 | 0.8 | 5.8 | LT |
| Bearing retainer (crankcase cover) | Screw | M6 | 3 | 11 | 1.1 | 8 | LT |
| Crankcase | Bolt | M8 | 3 | 26 | 2.6 | 19 | LT |
| | Bolt | M6 | 5 | 10 | 1.0 | 7.2 | |
| | Bolt | M6 | 6 | 10 | 1.0 | 7.2 | |
| | Bolt | M6 | 2 | 10 | 1.0 | 7.2 | |

| Item | Part name | Thread size | Q'ty | Tightening torque | | | Remarks |
|---|---|---|---|---|---|---|---|
| | | | | Nm | m · kg | ft · lb | |
| Starter one-way clutch | Bolt | M8 | 6 | 30 | 3.0 | 22 | |
| Clutch carrier assembly | Nut | M22 | 1 | 140 | 14.0 | 100 | Stake. |
| Pressure plate | Bolt | M6 | 5 | 8 | 0.8 | 5.8 | |
| Clutch boss | Nut | M16 | 1 | 90 | 9.0 | 65 | Use a lock washer. |
| Middle drive shaft bearing retainer | Screw | M8 | 4 | 25 | 2.5 | 18 | |
| Middle driven shaft drive pinion gear | Nut | M22 | 1 | 130 | 13.0 | 94 | Stake. |
| Middle drive shaft bearing housing | Bolt | M8 | 6 | 32 | 3.2 | 23 | |
| Middle driven gear bearing retainer | Nut | M65 | 1 | 110 | 11.0 | 80 | |
| Yoke (middle driven gear) | Nut | M14 | 1 | 120 | 12.0 | 85 | |
| Middle driven gear bearing housing | Bolt | M8 | 4 | 25 | 2.5 | 18 | |
| Yoke (middle driven shaft) | Nut | M14 | 1 | 97 | 9.7 | 70 | |
| Middle driven shaft bearing retainer | Nut | M55 | 1 | 80 | 8.0 | 53 | |
| Shift cam side plate | Screw | M6 | 1 | 12 | 1.2 | 8.7 | |
| Shift cam segment | Screw | M6 | 1 | 12 | 1.2 | 8.7 | |
| Stopper lever | Bolt | M6 | 1 | 10 | 1.0 | 7.2 | |
| Stopper screw | Screw | M8 | 1 | 22 | 2.2 | 16 | Use a lock washer. |
| Clutch adjuster locknut | Nut | M22 | 1 | 20 | 2.0 | 14 | |
| Reverse control lever | Bolt | M6 | 1 | 13 | 1.3 | 9.4 | |
| Oil temperature sensor | — | M12 | 1 | 20 | 2.0 | 14 | |
| Gear position switch | Bolt | M6 | 1 | 6 | 0.6 | 4.3 | |
| Lead holder (pickup coil lead) | Bolt | M5 | 2 | 7 | 0.7 | 5.1 | |
| Pickup coil | Bolt | M5 | 2 | 7 | 0.7 | 5.1 | |
| Crankcase cover left-thrust washer | Screw | M5 | 3 | 7 | 0.7 | 5.1 | |
| Stator coil assembly | Screw | M5 | 3 | 7 | 0.7 | 5.1 | |
| Starter assembly | Bolt | M6 | 4 | 10 | 1.0 | 7.2 | |
| Starter motor assembly | Bolt | M6 | 2 | 10 | 1.0 | 7.2 | |
| Speedometer cable housing | Screw | M6 | 1 | 10 | 1.0 | 7.2 | |
| Exhaust pipe | Nut | M6 | 2 | 10 | 1.0 | 7.2 | |
| Exhaust pipe protector | Bolt | M6 | 4 | 24 | 2.4 | 17 | |
| Muffler and frame | Bolt | M10 | 2 | 69 | 6.9 | 50 | |
| Muffler protector | Bolt | M6 | 4 | 7 | 0.7 | 5.1 | |
| Exhaust pipe and muffler | Bolt | M6 | 1 | 20 | 2.0 | 14 | |

EBS01006

## CHASSIS TIGHTENING TORQUES

| Part to be tightened | Thread size | Tightening torque | | | Remarks |
|---|---|---|---|---|---|
| | | Nm | m · kg | ft · lb | |
| Engine and engine stay (front upper) | M8 | 34 | 3.4 | 24 | |
| Engine and engine stay (front lower) | M10 | 69 | 6.6 | 50 | |
| Engine and frame (rear upper) | M10 | 69 | 6.6 | 50 | |
| Engine and frame (rear lower) | M10 | 69 | 6.6 | 50 | |
| Frame and engine stay (front upper) | M8 | 34 | 3.4 | 24 | |
| Frame and engine stay (front lower) | M8 | 34 | 3.4 | 24 | |
| Front guard and front carrier (upper) | M8 | 34 | 3.4 | 24 | |
| Front guard and front carrier (lower) | M8 | 34 | 3.4 | 24 | |
| Footrest | M6 | 30 | 3.0 | 22 | |
| Footrest bracket and frame | M8 | 34 | 3.4 | 24 | |
| | M10 | 69 | 6.6 | 50 | |
| Frame and front carrier (front) | M6 | 11 | 1.1 | 8 | |
| Frame and front carrier (rear) | M8 | 34 | 3.4 | 24 | |
| Front fender inner panel | M6 | 30 | 3.0 | 22 | |
| Rear carrier and frame | M8 | 34 | 3.4 | 24 | |
| Rear shock absorber assembly | M10 | 45 | 4.5 | 32 | |
| Rear knuckle | M10 | 45 | 4.5 | 32 | LS |
| Rear upper arm | M10 | 45 | 4.5 | 32 | LS |
| Rear lower arm | M10 | 45 | 4.5 | 32 | LS |
| Stabilizer holder | M8 | 30 | 3.0 | 22 | |
| Stabilizer joint | M10 | 56 | 5.6 | 40 | |
| Differential and frame | M10 | 55 | 5.5 | 40 | |
| Differential gear case filler bolt | M14 | 23 | 2.3 | 17 | |
| Differential gear case drain bolt | M10 | 10 | 1.0 | 7.2 | |
| Universal joint yoke (final drive pinion gear) | M14 | 110 | 11.0 | 80 | |
| Brake hose union bolt | M10 | 27 | 2.7 | 19 | |
| Brake hose joint and brake hose | M10 | 19 | 1.9 | 13 | |
| Brake hose joint and frame | M8 | 23 | 2.3 | 17 | |
| Cable guide and frame | M8 | 23 | 2.3 | 17 | Use a lock washer. |
| Tie-rod and locknut | M12 | 30 | 3.0 | 22 | |
| Pitman arm and tie-rod end | M12 | 30 | 3.0 | 22 | |
| Steering knuckle and tie-rod end | M12 | 30 | 3.0 | 22 | |
| Pitman arm nut | M14 | 190 | 19.0 | 140 | |
| Bearing retainer | M42 | 40 | 4.0 | 29 | |
| Fuel tank | M6 | 10 | 1.0 | 7.2 | |
| Fuel cock | M6 | 5 | 0.5 | 3.6 | |
| Front arm protector | M6 | 7 | 0.7 | 5.1 | |
| Front shock absorber assembly | M10 | 45 | 4.5 | 32 | |
| Steering knuckle | M12 | 30 | 3.0 | 22 | |

| Part to be tightened | Thread size | Tightening torque | | | Remarks |
|---|---|---|---|---|---|
| | | Nm | m · kg | ft · lb | |
| Front upper arm | M10 | 45 | 4.5 | 32 | LS |
| Front lower arm | M10 | 45 | 4.5 | 32 | LS |
| Front brake caliper | M8 | 30 | 3.0 | 22 | |
| Front brake disc | M8 | 30 | 3.0 | 22 | |
| Front brake disc guard | M6 | 7 | 0.7 | 5.1 | |
| Rear brake pressure plate | M8 | 23 | 2.3 | 17 | |
| Front wheel axle nut | M20 | 260 | 26.0 | 190 | Stake. |
| Front wheel nut | M10 | 55 | 5.5 | 40 | |
| Rear wheel axle nut | M20 | 260 | 26.0 | 190 | Stake. |
| Rear wheel nut | M10 | 55 | 5.5 | 40 | |
| Front brake master cylinder holder | M6 | 10 | 1.0 | 7.2 | |
| Handlebar holder and steering stem | M8 | 23 | 2.3 | 17 | |
| Tail/brake light | M6 | 7 | 0.7 | 5.1 | |
| Meter bracket and steering stem | M6 | 7 | 0.7 | 5.1 | |
| Final gear case and sub frame | M10 | 45 | 4.5 | 32 | |
| Final gear case filler bolt | M14 | 23 | 2.3 | 17 | |
| Final gear case drain bolt | M14 | 23 | 2.3 | 17 | |
| Sub frame and frame | M10 | 45 | 4.5 | 32 | |
| | M12 | 82 | 8.2 | 35 | |
| Trailer hitch | M10 | 40 | 4.0 | 29 | |

EBS00022

## HOW TO USE THE CONVERSION TABLE

All specification data in this manual are listed in SI and METRIC UNITS.
Use this table to convert METRIC unit data to IMPERIAL unit data.

Ex.

| METRIC | | MULTIPLIER | | IMPERIAL |
|---|---|---|---|---|
| ** mm | × | 0.03937 | = | ** in |
| 2 mm | × | 0.03937 | = | 0.08 in |

CONVERSION TABLE

| METRIC TO IMPERIAL | | | |
|---|---|---|---|
| | Metric unit | Multiplier | Imperial unit |
| Torque | m · kg<br>m · kg<br>cm · kg<br>cm · kg | 7.233<br>86.794<br>0.0723<br>0.8679 | ft · lb<br>in · lb<br>ft · lb<br>in · lb |
| Weight | kg<br>g | 2.205<br>0.03527 | lb<br>oz |
| Speed | km/hr | 0.6214 | mph |
| Distance | km<br>m<br>m<br>cm<br>mm | 0.6214<br>3.281<br>1.094<br>0.3937<br>0.03937 | mi<br>ft<br>yd<br>in<br>in |
| Volume/ Capacity | cc ($cm^3$)<br>cc ($cm^3$)<br>lt (liter)<br>lt (liter) | 0.03527<br>0.06102<br>0.8799<br>0.2199 | oz (IMP liq.)<br>cu · in<br>qt (IMP liq.)<br>gal (IMP liq.) |
| Misc. | kg/mm<br>$kg/cm^2$<br>Centigrade (°C) | 55.997<br>14.2234<br>9/5+32 | lb/in<br>psi ($lb/in^2$)<br>Fahrenheit (°F) |

EBS00023

## GENERAL TIGHTENING TORQUE SPECIFICATIONS

This chart specifies tightening torques for standard fasteners with a standard ISO thread pitch. Tightening torque specifications for special components or assemblies are provided for each chapter of this manual. To avoid warpage, tighten multi-fastener assemblies in a crisscross pattern and progressive stages until the specified tightening torque is reached. Unless otherwise specified, tightening torque specifications require clean, dry threads. Components should be at room temperature.

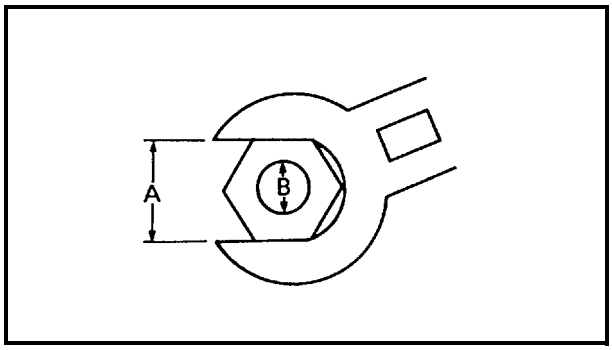


A: Distance between flats
B: Outside thread diameter

| A (nut) | B (bolt) | General tightening torques | | |
|---|---|---|---|---|
| | | Nm | m · kg | ft · lb |
| 10 mm | 6 mm | 6 | 0.6 | 4.3 |
| 12 mm | 8 mm | 15 | 1.5 | 11 |
| 14 mm | 10 mm | 30 | 3.0 | 22 |
| 17 mm | 12 mm | 55 | 5.5 | 40 |
| 19 mm | 14 mm | 85 | 8.5 | 61 |
| 22 mm | 16 mm | 130 | 13.0 | 94 |

EBS00024

# LUBRICATION POINTS AND LUBRICANT TYPES

## ENGINE

| Lubrication point | Lubricant |
|---|---|
| Oil seal lips | LS |
| Bearings | E |
| O-ring | LS |
| Valve stems (intake and exhaust) | M |
| Valve stem ends (intake and exhaust) | M |
| Camshaft lobes | M |
| Cylinder head bolts | E |
| Crankshaft pin | E |
| Connecting rod big end thrust surface | E |
| Balancer drive gear | E |
| Piston and piston rings | E |
| Piston pin | E |
| Buffer boss (crankshaft) | E |
| Oil pump shaft, rotor, housing | E |
| Starter idle gears 1, 2 | E |
| Starter wheel gear | E |
| Primary drive gear | E |
| Push rods 1, 2 | LS |
| Ball (push rod) | LS |
| Transmission gears (wheel and pinion) | M |
| Shift fork and guide bar | E |
| Shift drum shaft | E |
| Shift shaft | E |
| Reverse shift bracket | E |
| Ball (shift drum stopper) | E |
| Clutch housing | E |
| Gear coupling | E |
| Driven cam | M |
| Rocker arm shaft outer surfaces | E |
| Rocker arm inner surfaces | M |
| Gear position switch grommet | Yamaha bond No.1215 (Three bond No.1215®) |
| AC magneto lead grommet | Yamaha bond No.1215 (Three bond No.1215®) |
| Crankcase mating surface | Yamaha bond No.1215 (Three bond No.1215®) |

# LUBRICATION DIAGRAMS

① Camshaft
② Main axle
③ Drive axle
④ Crankshaft
⑤ Oil filter
⑥ Oil pump
⑦ Idle axle
⑧ Oil temperature sensor

Ⓐ To oil cooler

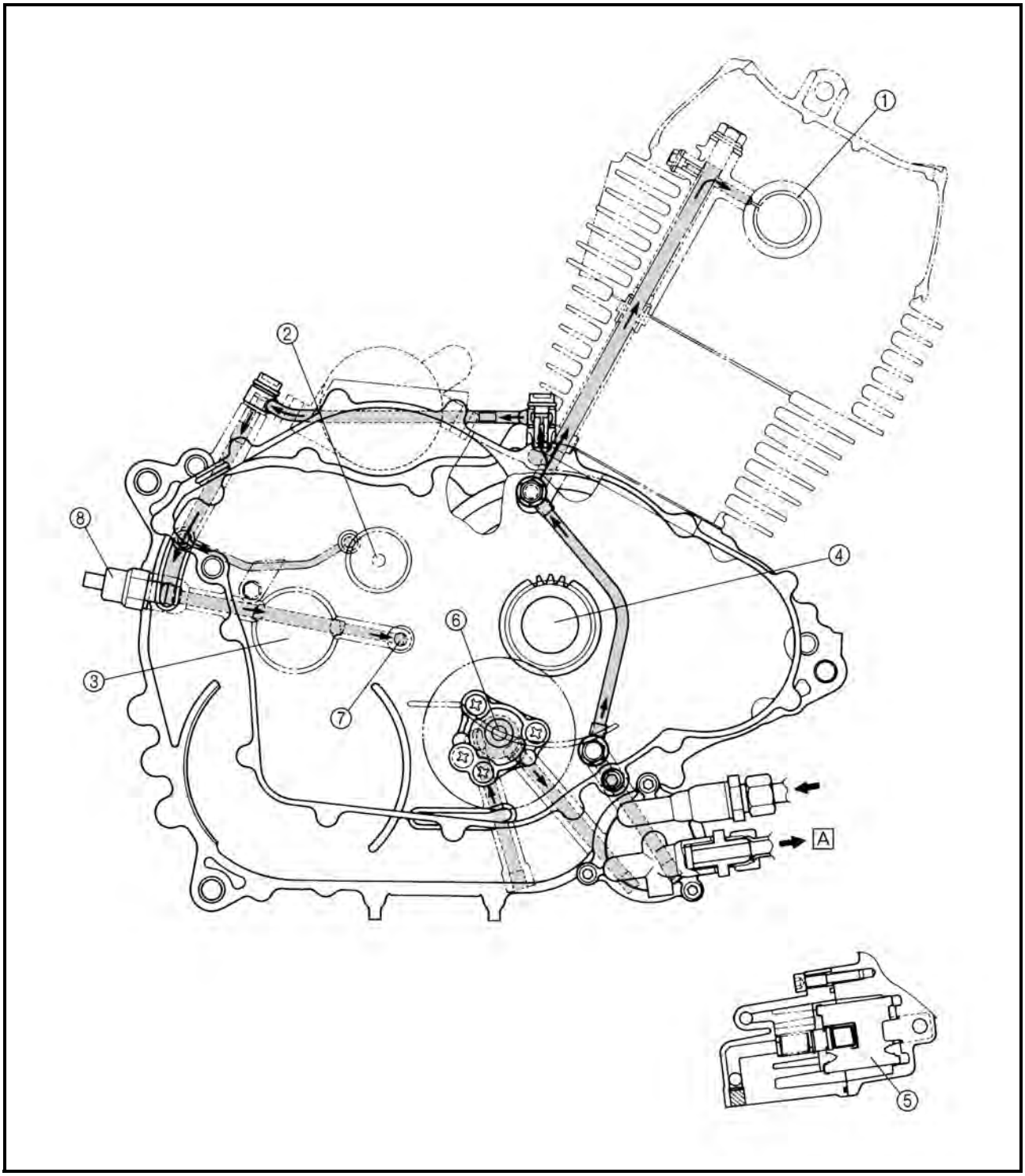

① Camshaft
② Oil strainer
③ Main axle
④ Drive axle
⑤ Crankshaft
⑥ Oil pump
⑦ Idle axle

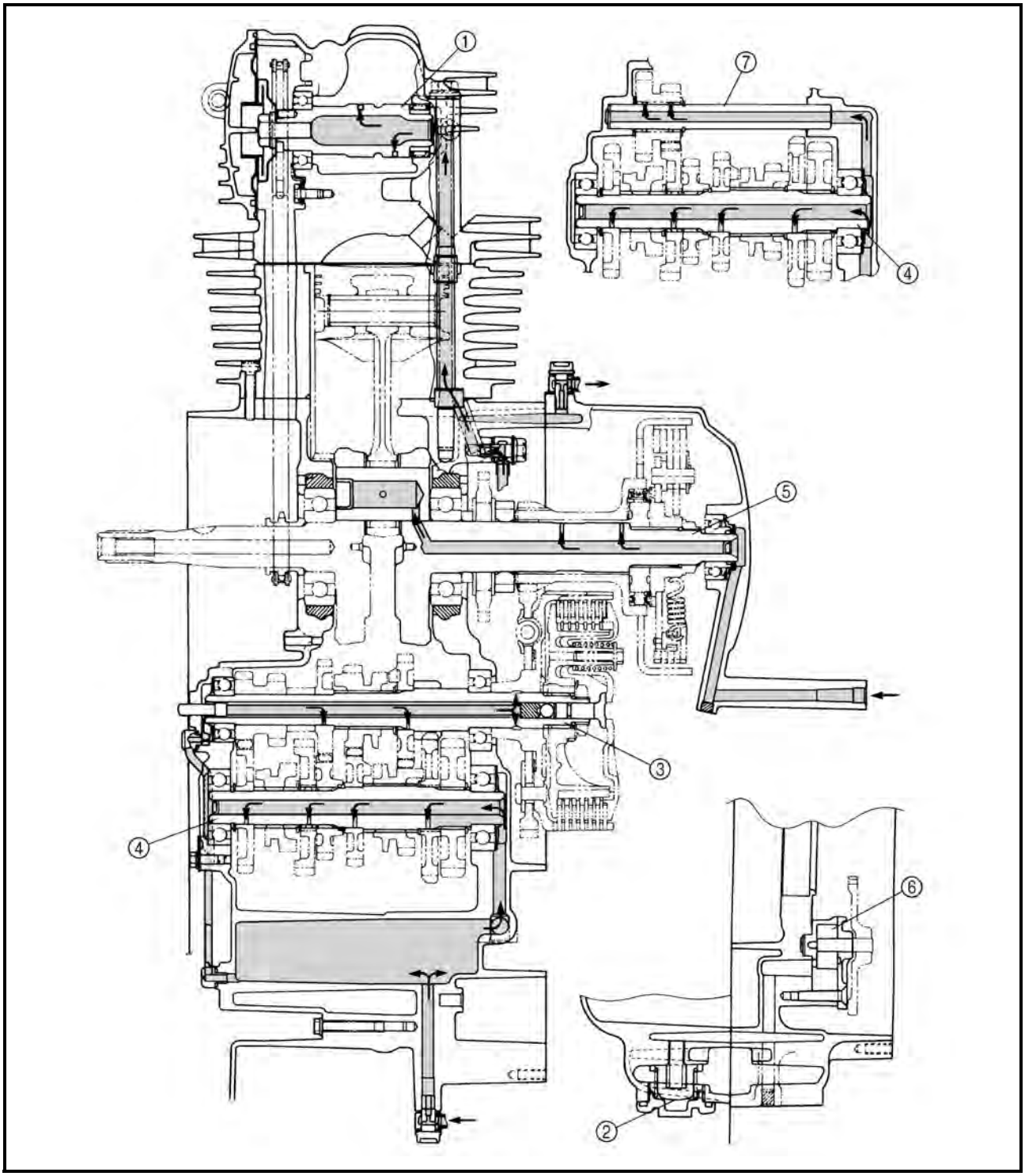

## CABLE ROUTING

① Left handlebar switch lead
② Rear brake lever light switch lead
③ Starter cable
④ Rear brake lever cable
⑤ Front brake hose
⑥ Front brake lever light switch lead
⑦ Differential gear motor lead
⑧ Throttle cable
⑨ Fuel tank breather hose
⑩ Speedometer couplers
⑪ Front brake light switch coupler
⑫ Main switch coupler
⑬ Rear brake lever light switch coupler
⑭ Left handlebar switch coupler
⑮ Oil cooler fan motor lead
⑯ Differential gear case breather hose
⑰ Auxiliary DC jack connector
⑱ Reverse control cable
⑲ Speedometer cable

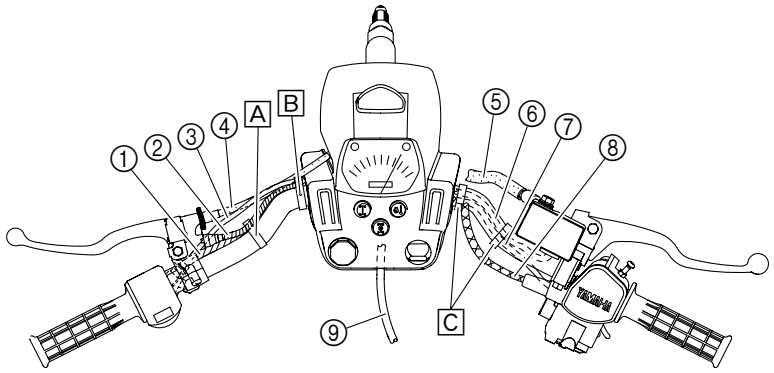


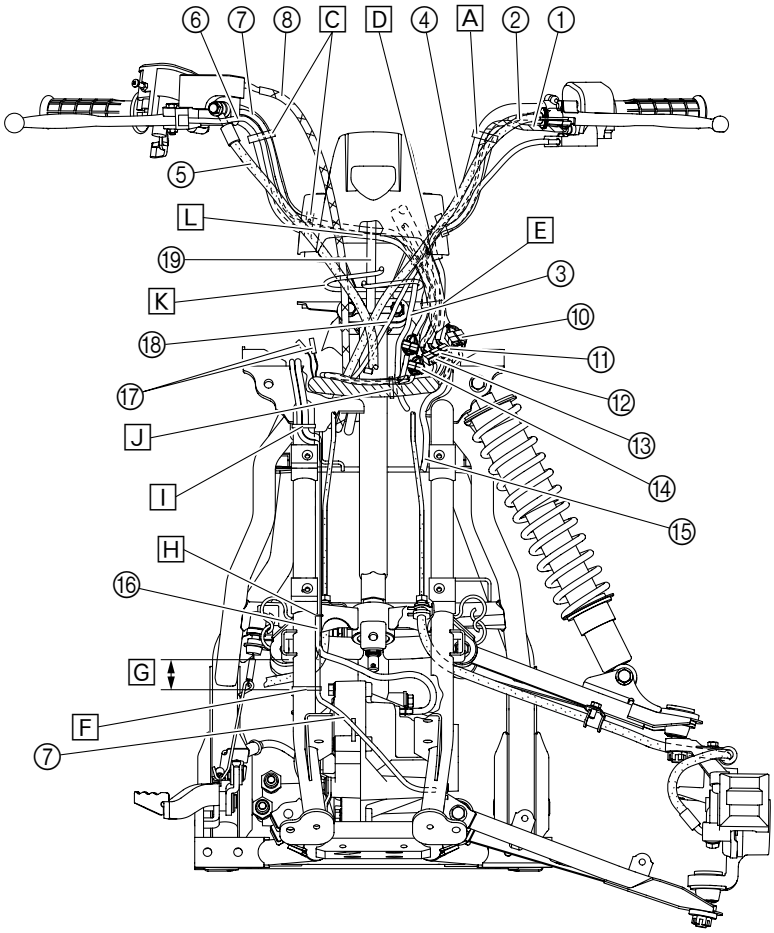

A Fasten the left handlebar switch lead and rear brake lever light switch lead to the handlebar with the plastic band.
B Fasten the starter cable, left handlebar switch lead, and rear brake lever light switch lead to the handlebar with the plastic band.
C Fasten the front brake light switch lead and the on-command four-wheel-drive motor switch and differential gear lock switch lead to the handlebar with the plastic band.
D Route the rear brake lever cable in front of the handlebar cover as shown in the illustration.
E Fasten the front brake light switch lead, indicator light lead, speedometer cable, main switch lead, on-command four-wheel-drive motor switch and differential gear lock switch lead, and left handlebar switch lead with the plastic band.
F Fasten the on-command four-wheel-drive motor switch and differential gear lock switch lead to the frame with the plastic band.

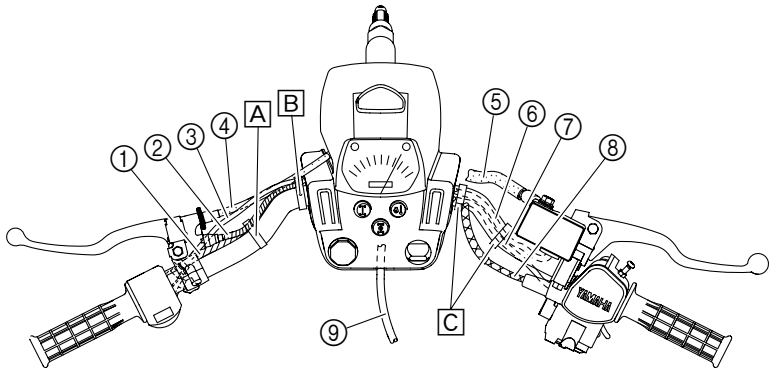


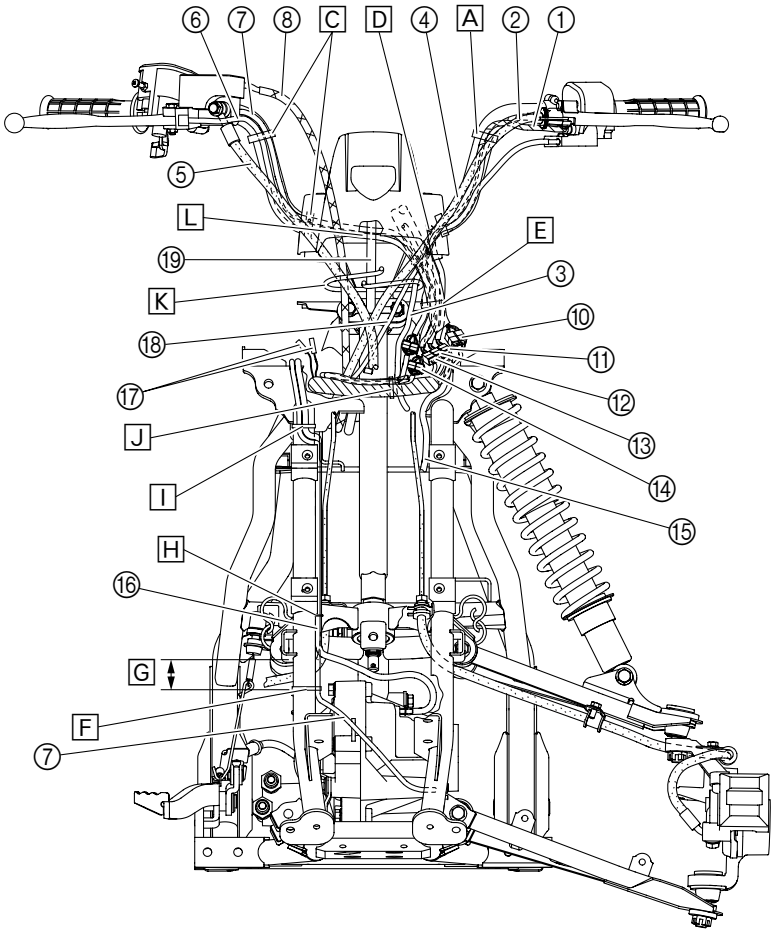

G 30 ~ 40 mm (1.18 ~ 1.57 in)

H Fasten the differential gear case breather hose and the on-command four-wheel-drive motor switch and differential gear lock switch lead with the plastic band.

I Fasten the differential gear case breather hose and the on-command four-wheel-drive motor switch and differential gear lock switch lead to the frame with the plastic band.

J Fasten the on-command four-wheel-drive motor switch and differential gear lock switch lead, left handlebar switch lead, and wire harness with the plastic band.

K Pass the front brake hose, rear brake lever cable, throttle cable, reverse lock release cable, and starter cable through the guide.

L Route the front brake light switch lead and the on-command four-wheel-drive motor switch and differential gear lock switch lead behind the speedometer cable.

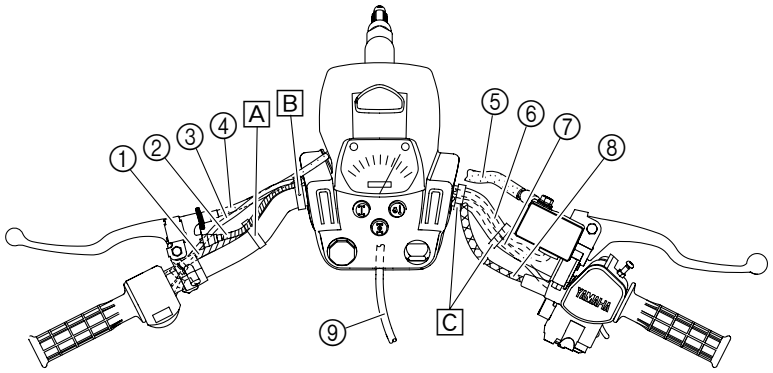


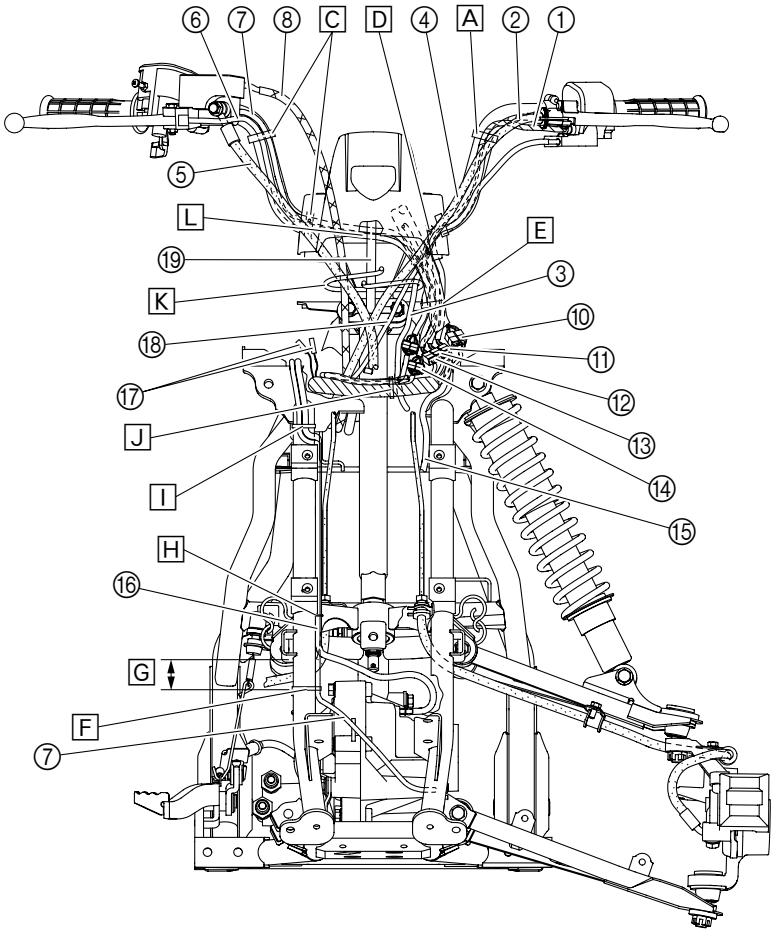

① Headlight lead
② Oil cooler fan motor lead
③ Speedometer couplers
④ Speedometer lead
⑤ Rear brake lever cable
⑥ Starter cable
⑦ Reverse control cable
⑧ Main switch lead
⑨ Indicator light coupler
⑩ Fuel tank breather hose
⑪ Front brake light switch coupler
⑫ Air vent hose
⑬ Final gear case breather hose
⑭ Carburetor warmer lead
⑮ Oil temperature sensor
⑯ AC magneto lead
⑰ Starter motor lead
⑱ Oil cooler inlet hose
⑲ Differential gear motor lead
⑳ On-command four-wheel-drive indicator light
㉑ Differential gear lock indicator light

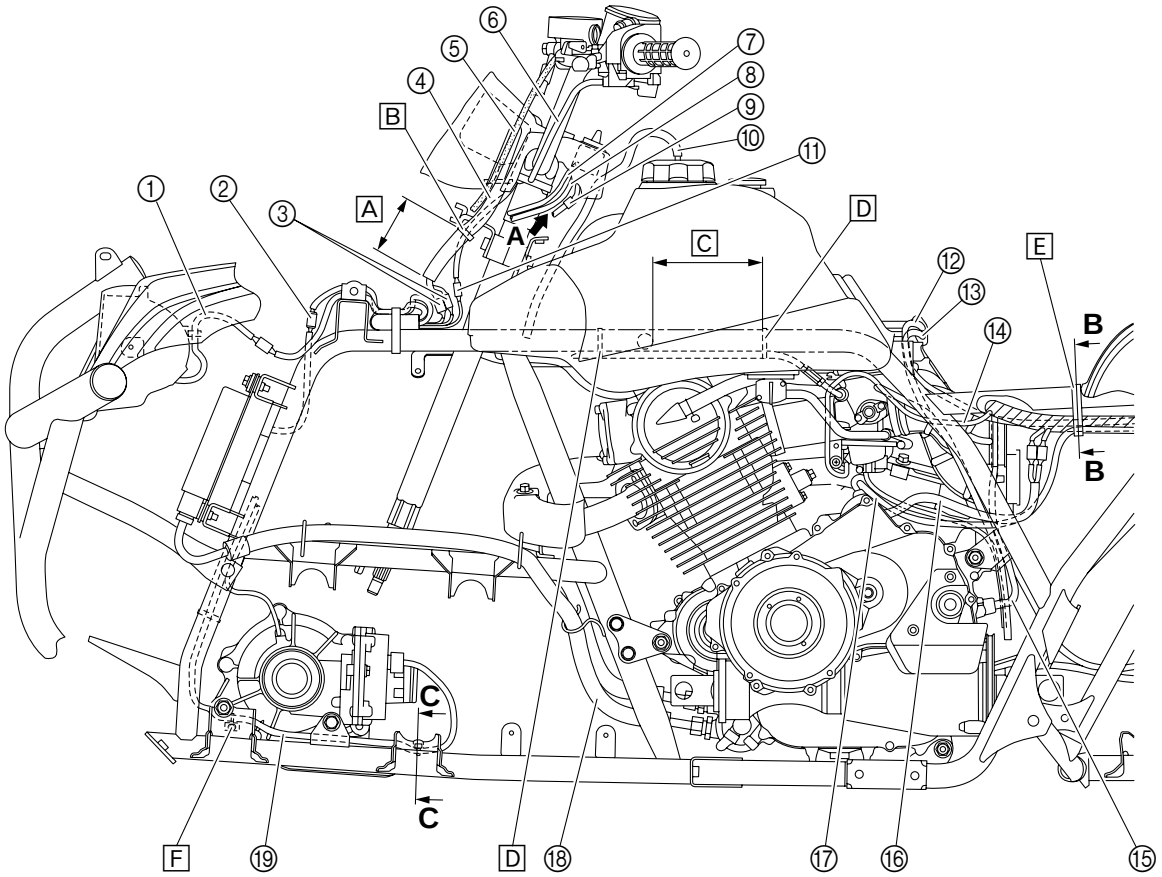


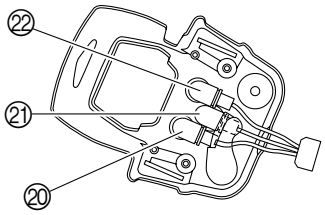

A

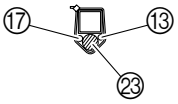

B-B

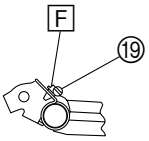

C-C

㉒ Oil temperature warning light
㉓ Wire harness

A 70 ~ 80 mm (2.76 ~ 3.15 in)
B Fasten the front brake light switch lead, indicator light lead, speedometer cable, on-command four-wheel-drive motor switch and differential gear lock switch lead, and left handlebar switch lead with the plastic band.
C 110 ~ 130 mm (4.33 ~ 5.12 in)
D Fasten the starter cable to the frame with the plastic band.
E Fasten the wire harness, starter motor lead, and final gear case breather hose to the frame with the plastic band, making sure not to pinch the hose.
F Fasten the on-command four-wheel-drive motor switch and differential gear lock switch lead to the frame with the plastic band.

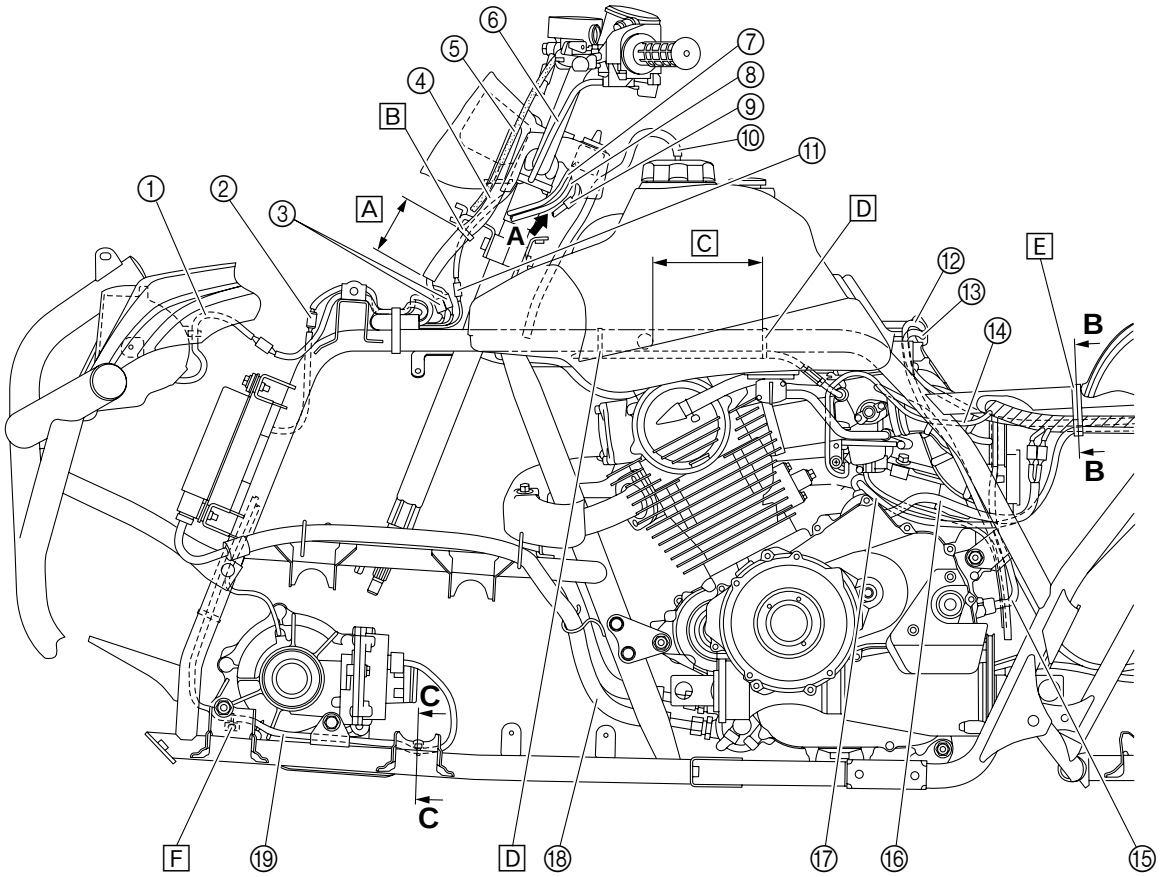


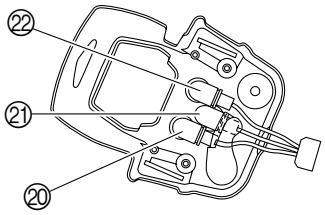

A

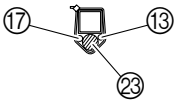

B-B

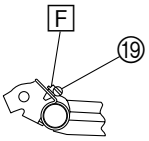

C-C

① Fuse box lead
② Final gear case breather hose
③ Negative battery lead
④ Rectifier regulator
⑤ Brake pedal cable
⑥ Rear brake lever cable
⑦ Wire harness
⑧ Starter motor lead
⑨ Tail/brake light lead

A Fasten the wire harness, starter motor lead, and final gear case breather hose to the frame with the plastic band, making sure not to pinch the hose.
B Fasten the tail/brake light leads with the holder on the rear storage compartment lid and the holder on the bottom of the compartment.

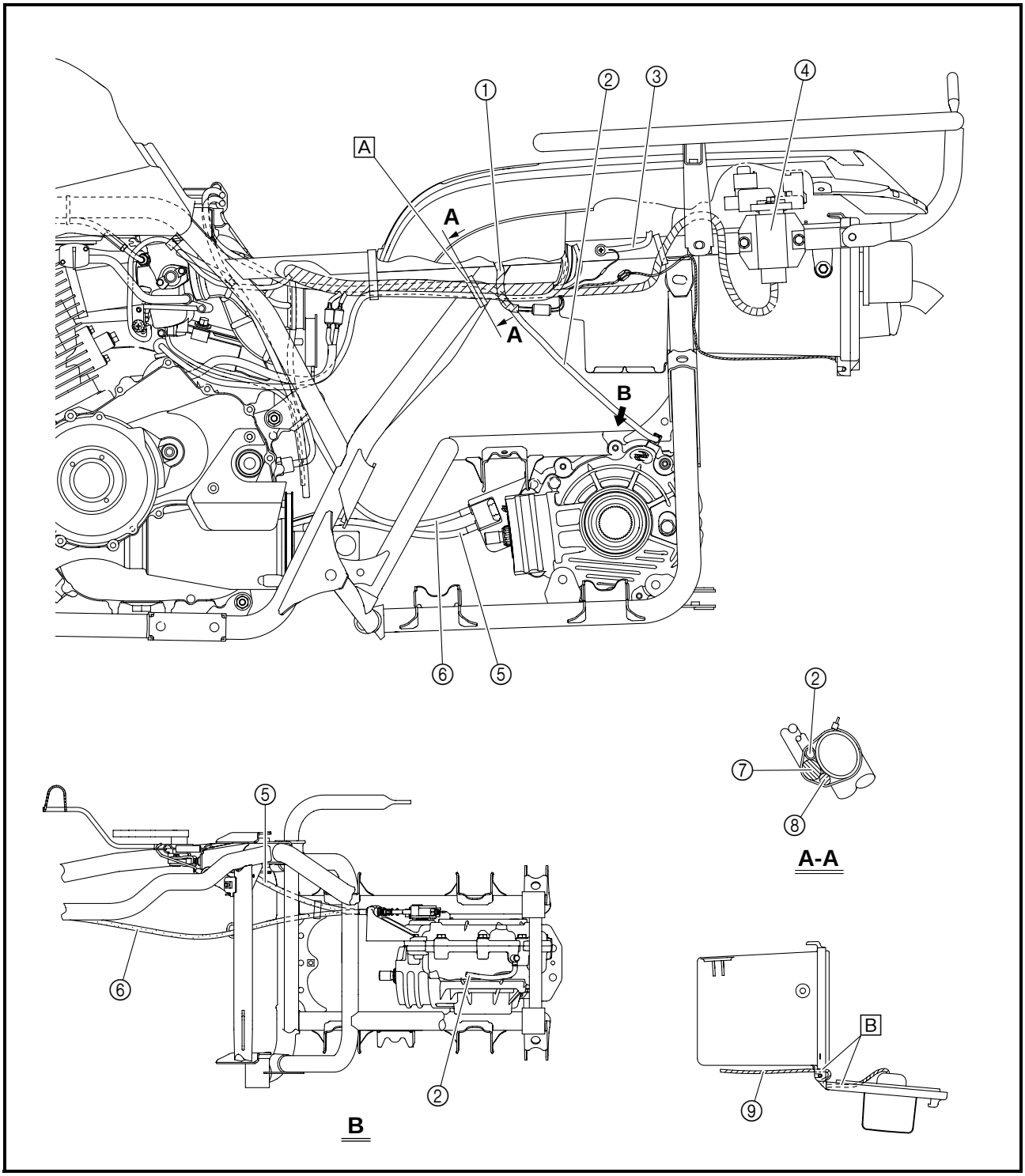

① Rear brake lever cable
② Spark plug lead
③ Ignition coil
④ Reverse control cable
⑤ Headlight lead
⑥ Differential gear motor lead
⑦ Oil cooler inlet hose
⑧ Oil cooler outlet hose
⑨ Speedometer cable
⑩ Throttle cable
⑪ Wire harness

A 20 ~ 30 mm (0.79 ~ 1.18 in)
B Fasten the wire harness, rear brake lever cable, reverse lock release cable, and speedometer cable to the frame with the plastic band.
C 140 ~ 150 mm (5.51 ~ 5.91 in)
D Fasten the wire harness and spark plug lead to the frame with the plastic band.
E Fasten the wire harness at the white tape with the plastic band.

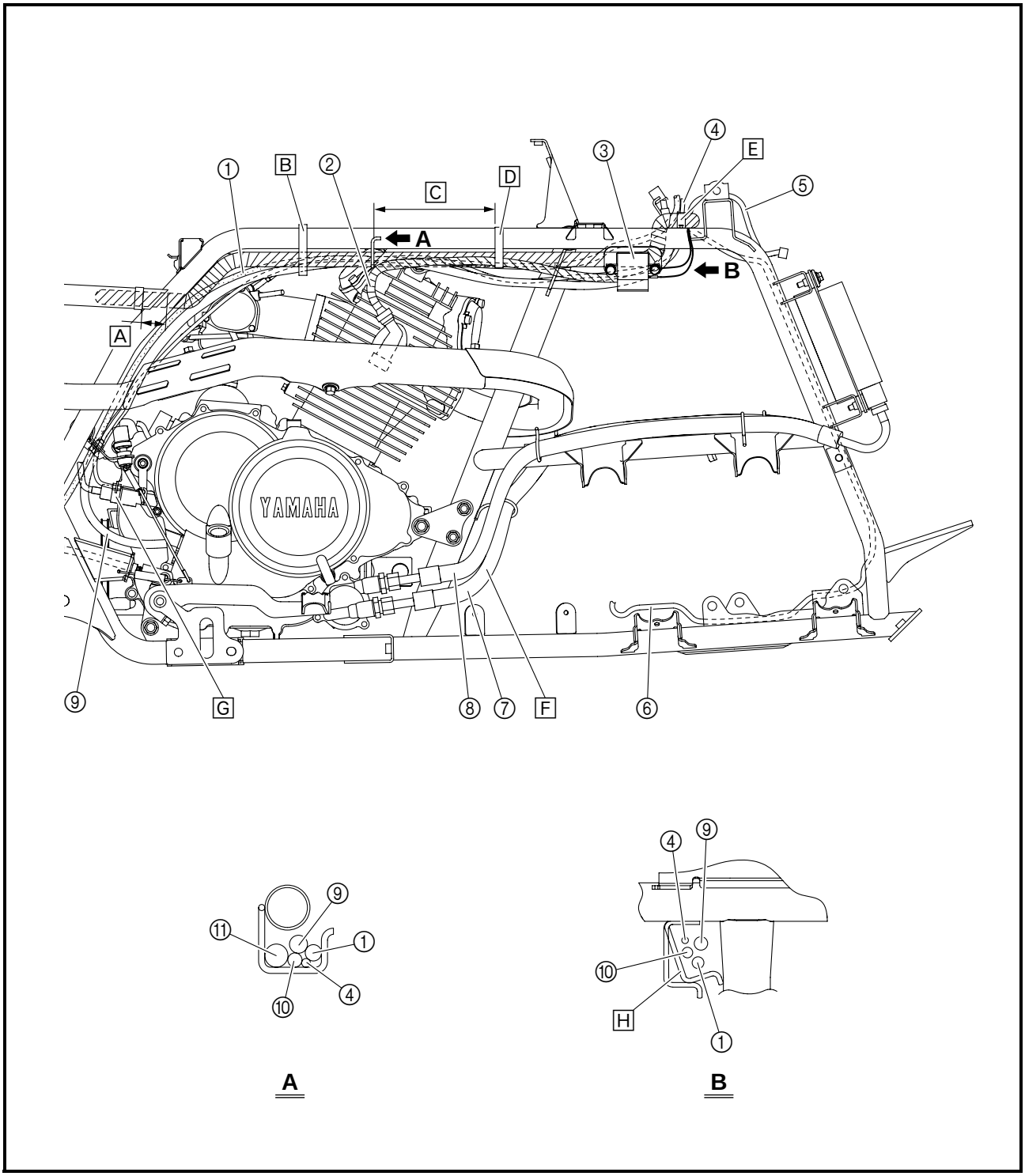

F Make sure that the oil hoses do not contact each other or the frame in the area shown in the illustration.
G Adjust the reverse control cable so that it is not too taut or slack. The cable should not hang down and it should not cause the lever arm on the engine to move.
H Pass the leads through the guide, and then bend the guide as shown in the illustration.

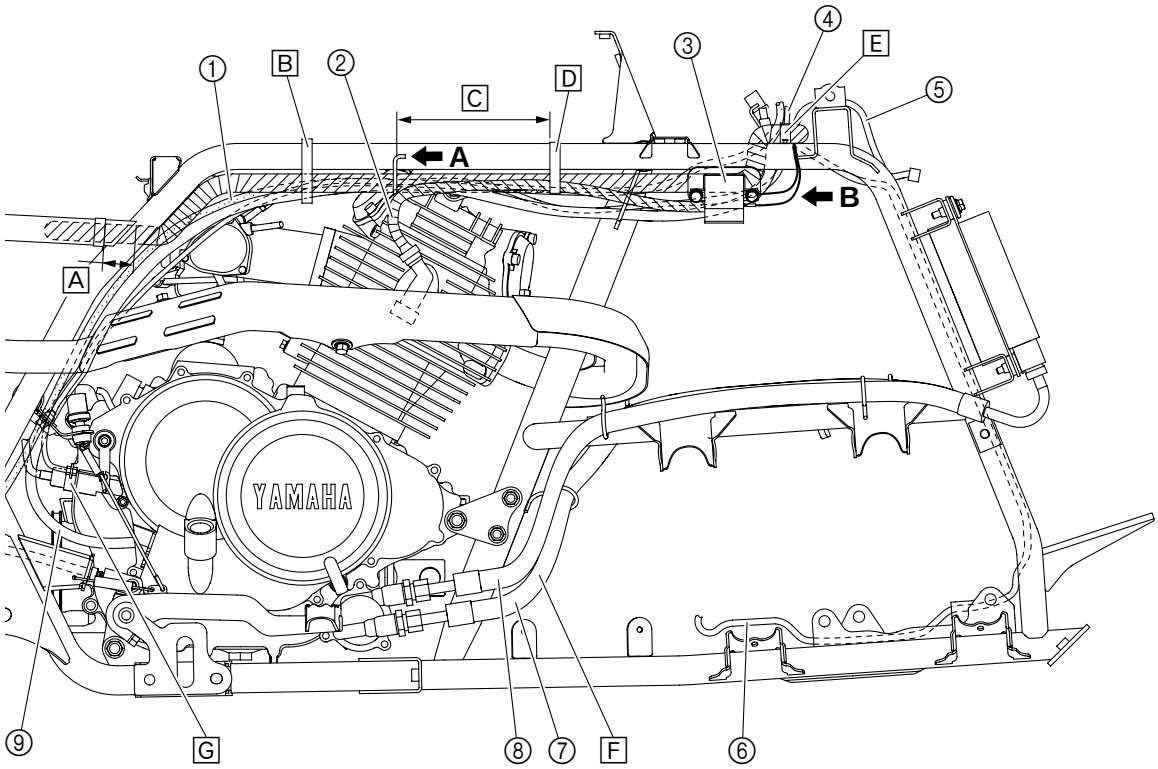


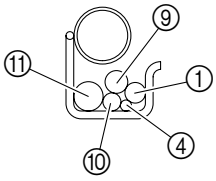


A

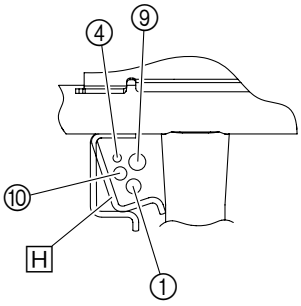


B

① Brake pedal light switch
② Speedometer cable
③ Oil temperature sensor
④ Brake pedal cable
⑤ Rear brake lever cable
⑥ Air vent hose
⑦ Final gear case breather hose
⑧ Wire harness
⑨ Neutral switch lead
⑩ Overflow hose
⑪ Reverse control cable
⑫ Brake pedal light switch lead
⑬ Starter motor lead
⑭ AC magneto lead
⑮ Vacuum hose

A Make sure that the brake cables do not contact the stabilizer.
B Fasten the brake pedal cable and rear brake lever cable with the plastic band.

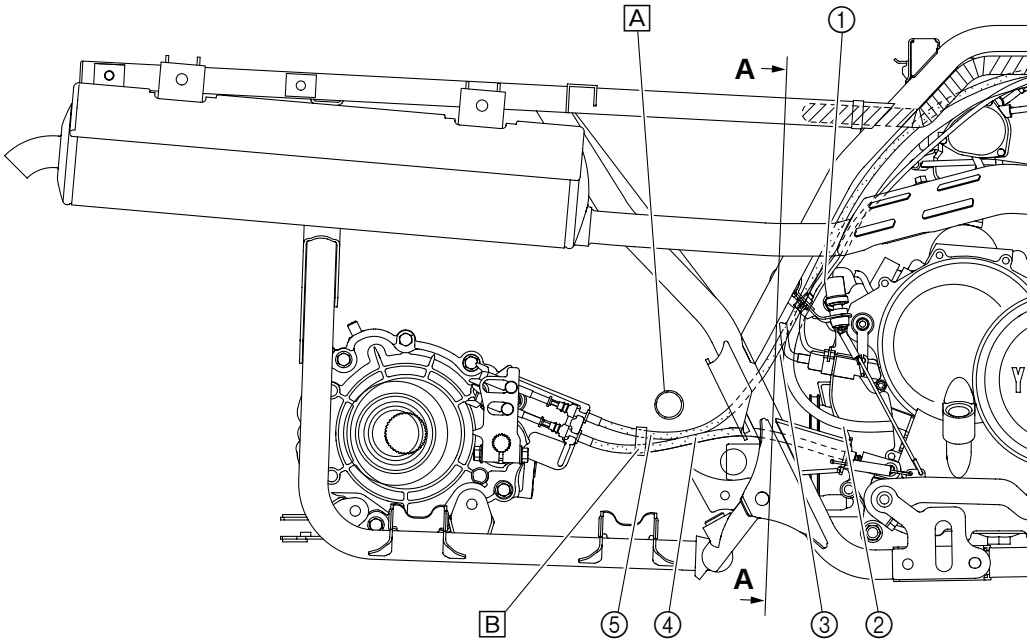


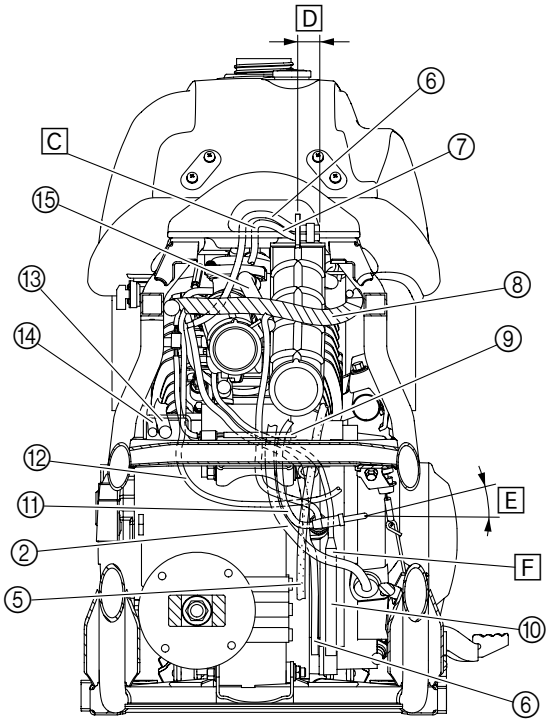


A-A

C Pass the air vent hose through the left hole in the fuel tank and pass the final gear case breather hose through the right hole.
D 10 ~ 20 mm (0.39 ~ 0.79 in)
E 10 ~ 20°
F Make sure that the rear brake cable, thermo switch lead, reverse lock release cable, and speedometer cable do not contact each other in the area shown in the illustration.

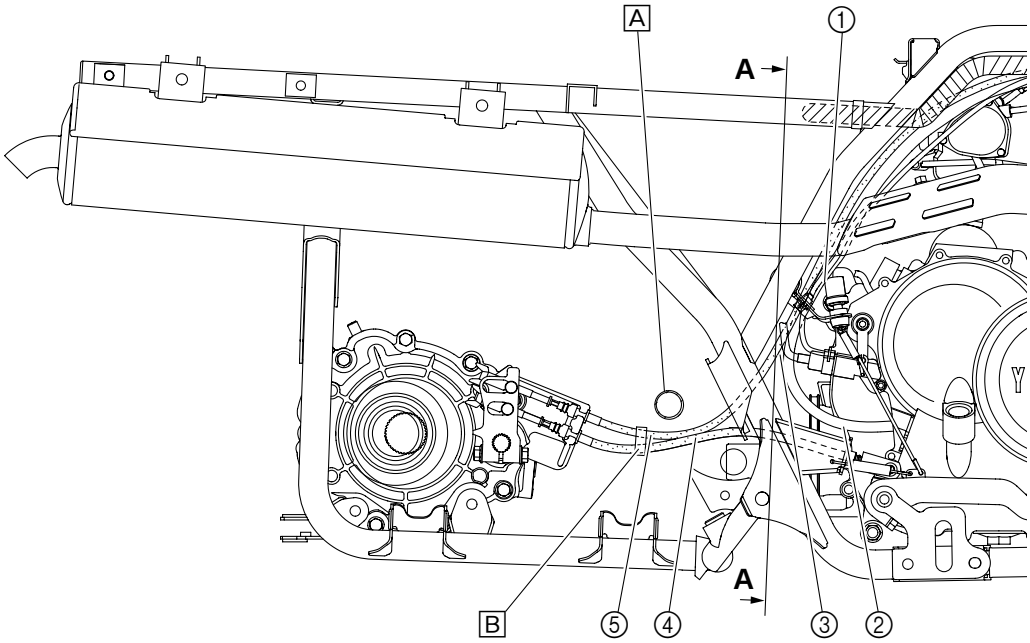


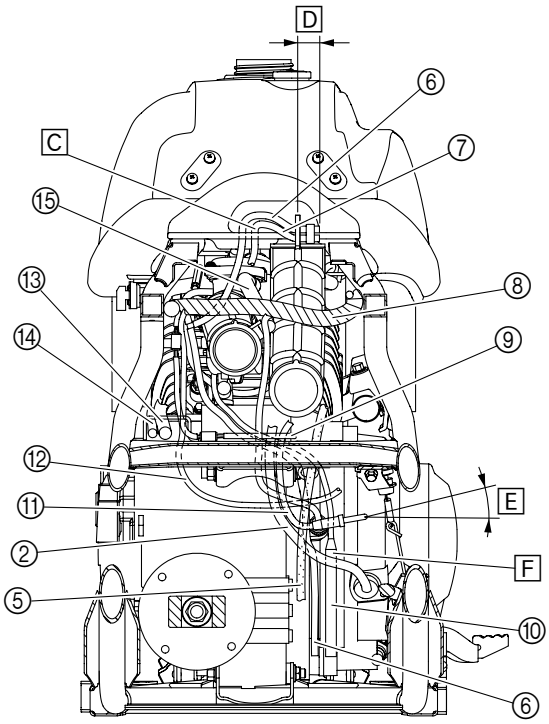


A-A

① Differential gear case breather hose
② Throttle cable
③ Wire harness
④ Air vent hose
⑤ Final gear case breather hose
⑥ Positive battery lead
⑦ Starter relay
⑧ Headlight relay
⑨ Four-wheel-drive relay 2
⑩ Four-wheel-drive relay 1
⑪ On-command four-wheel-drive indicator light relay
⑫ Four-wheel-drive relay 3
⑬ CDI unit
⑭ Negative battery lead
⑮ Battery
⑯ Oil cooler fan motor relay
⑰ Four-wheel-drive motor fuse
⑱ Oil cooler fan motor control unit
⑲ Fuse box
⑳ Carburetor warmer lead

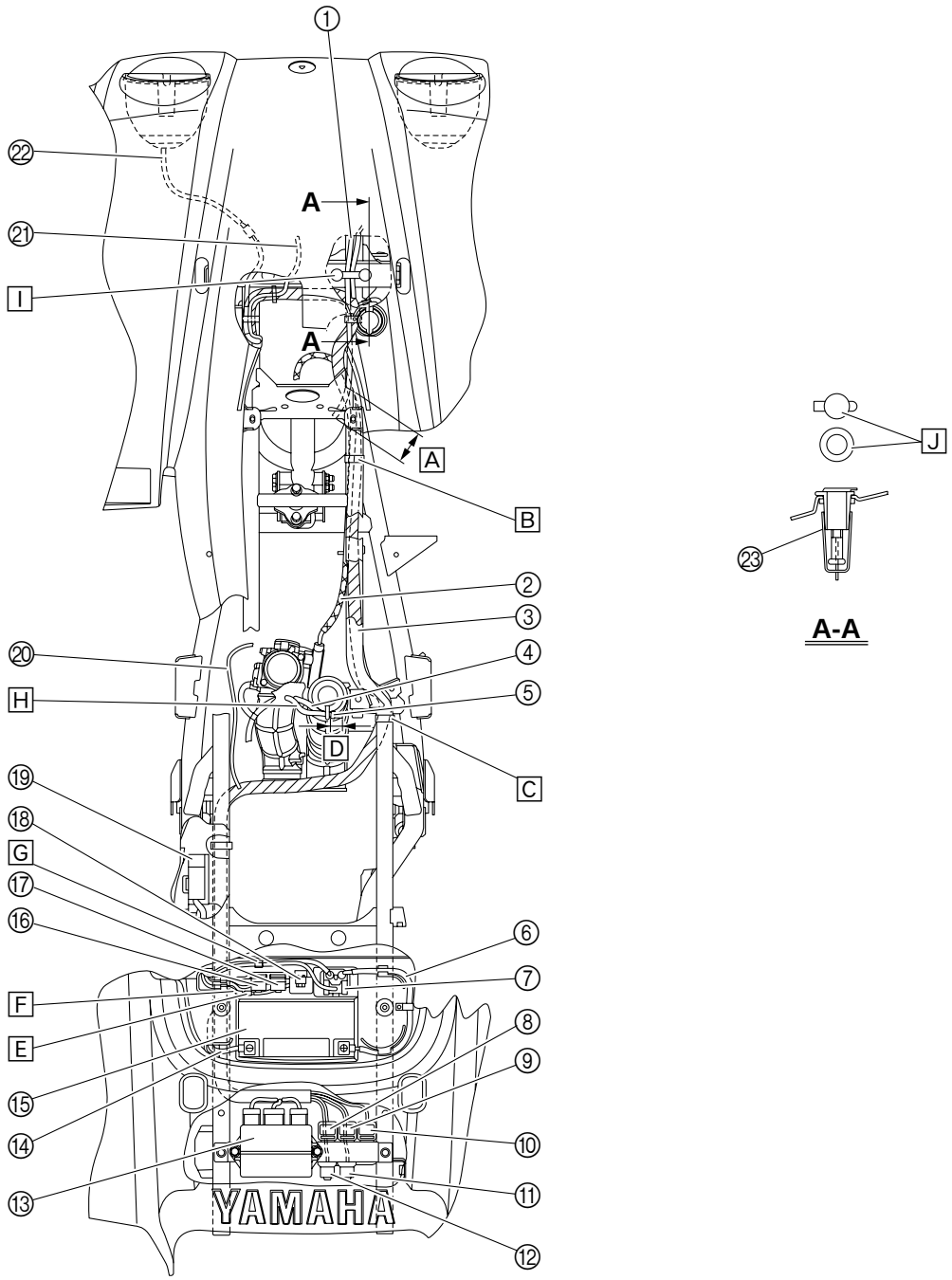

㉑ Oil cooler fan motor lead
㉒ Headlight lead
㉓ Auxiliary DC jack

A 130 ~ 140 mm (5.12 ~ 5.51 in)
B Fasten the wire harness and spark plug lead to the frame with the plastic band.
C Fasten the wire harness to the frame with the plastic band.
D 10 ~ 20 mm (0.39 ~ 0.79 in)
E Place the oil cooler fan motor control unit coupler inside the battery box.
F Make sure not to pinch the leads.
G Fasten the starter motor lead and starter relay lead with the plastic band.
H Pass the air vent hose through the left hole in the fuel tank and pass the final gear case breather hose through the right hole.
I Route all of the leads over the bracket.

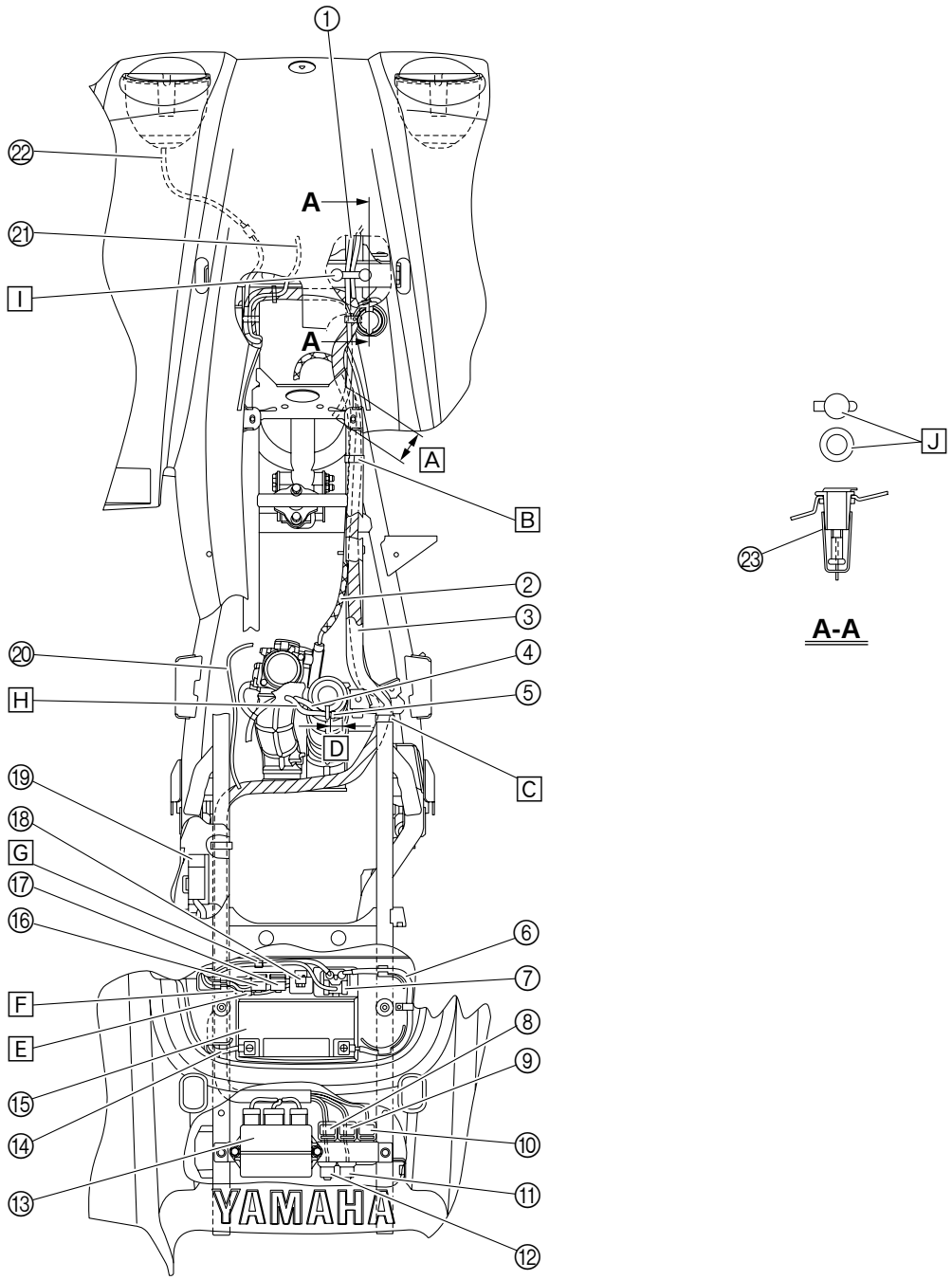

[J] Position the auxiliary DC jack and cap so that the text is aligned as shown in the illustration.

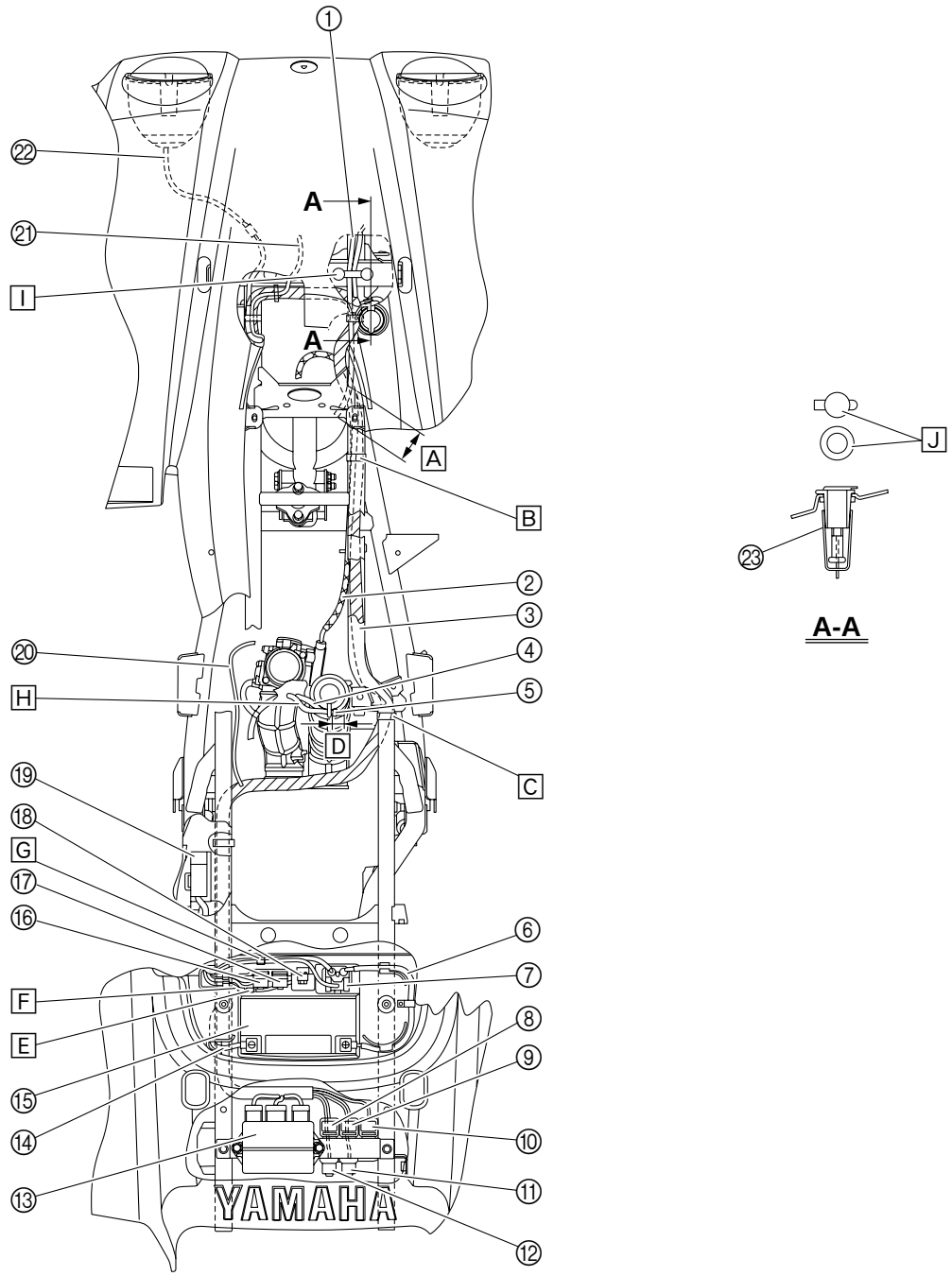

EBS00029

# PERIODIC CHECKS AND ADJUSTMENTS

## INTRODUCTION

This chapter includes all information necessary to perform recommended checks and adjustments. These preventive maintenance procedures, if followed, will ensure more reliable vehicle operation and a longer service life. The need for costly overhaul work will be greatly reduced. This information applies to vehicles already in service as well as to new vehicles that are being prepared for sale. All service technicians should be familiar with this entire chapter.

EBU21742

## PERIODIC MAINTENANCE CHART FOR THE EMISSION CONTROL SYSTEM

**NOTE:**

- For ATVs not equipped with an odometer or an hour meter, follow the month maintenance intervals.
- For ATVs equipped with an odometer or an hour meter, follow the km (mi) or hours maintenance intervals. However, keep in mind that if the ATV isn't used for a long period of time, the month maintenance intervals should be followed.
- Items marked with an asterisk should be performed by a Yamaha dealer as they require special tools, data and technical skills.



| NO. | | ITEM | CHECK OR MAINTENANCE JOB | Whichever comes first ⇨ | | INITIAL | | | EVERY | |
|---|---|---|---|---|---|---|---|---|---|---|
| | | | | | month | 1 | 3 | 6 | 6 | 12 |
| | | | | | km (mi) | 320 (200) | 1300 (800) | 2500 (1600) | 2500 (1600) | 5000 (3200) |
| | | | | | hours | 20 | 80 | 160 | 160 | 320 |
| 1 | * | **Fuel line** | • Check fuel hoses for cracks or other damage, and replace if necessary. | | | | | √ | √ | √ |
| 2 | | **Spark plug** | • Check condition and clean, regap, or replace if necessary. | | | √ | √ | √ | √ | √ |
| 3 | * | **Valves** | • Check valve clearance and adjust if necessary. | | | √ | | √ | √ | √ |
| 4 | * | **Carburetor** | • Check starter (choke) operation and correct if necessary.<br>• Check engine idling speed and adjust if necessary. | | | | √ | √ | √ | √ |
| 5 | * | **Crankcase breather system** | • Check breather hose for cracks or other damage, and replace if necessary. | | | | | √ | √ | √ |
| 6 | * | **Exhaust system** | • Check for leakage and replace gasket(s) if necessary.<br>• Check for looseness and tighten all screw clamps and joints if necessary. | | | | | √ | √ | √ |
| 7 | | **Spark arrester** | • Clean. | | | | | √ | √ | √ |

EBU21863

# GENERAL MAINTENANCE AND LUBRICATION CHART

| NO. | | ITEM | CHECK OR MAINTENANCE JOB | Whichever comes first ⇨ | INITIAL | | | EVERY | |
|---|---|---|---|---|---|---|---|---|---|
| | | | | month | 1 | 3 | 6 | 6 | 12 |
| | | | | km (mi) | 320 (200) | 1300 (800) | 2500 (1600) | 2500 (1600) | 5000 (3200) |
| | | | | hours | 20 | 80 | 160 | 160 | 320 |
| 1 | | Air filter element | • Clean and replace if necessary. | | Every 20 ~ 40 hours (more often in wet or dusty areas) | | | | |
| 2 | * | Clutch | • Check operation and adjust if necessary. | | √ | | √ | √ | √ |
| 3 | * | Front brake | • Check operation and correct if necessary.<br>• Check fluid level and ATV for fluid leakage, and correct if necessary. | | √ | √ | √ | √ | √ |
| | | | • Replace brake pads. | | Whenever worn to the limit | | | | |
| 4 | * | Rear brake | • Check operation and correct if necessary.<br>• Check brake lever and pedal free play, and adjust if necessary. | | √ | √ | √ | √ | √ |
| | | | • Replace brake friction plates. | | Whenever worn to the limit | | | | |
| 5 | * | Brake hoses | • Check for cracks or other damage, and replace if necessary. | | | √ | √ | √ | √ |
| | | | • Replace. | | Every 4 years | | | | |
| 6 | * | Wheels | • Check runout and for damage, and replace if necessary. | | √ | | √ | √ | √ |
| 7 | * | Tires | • Check tread depth and for damage, and replace if necessary.<br>• Check air pressure and balance, and correct if necessary. | | √ | | √ | √ | √ |
| 8 | * | Wheel bearings | • Check for looseness or damage, and replace if necessary. | | √ | | √ | √ | √ |
| 9 | * | Drive shaft universal joint | • Lubricate with lithium-soap-based grease. | | | | √ | √ | √ |
| 10 | * | Chassis fasteners | • Make sure that all nuts, bolts, and screws are properly tightened. | | √ | √ | √ | √ | √ |
| 11 | * | Shock absorber assemblies | • Check operation and correct if necessary.<br>• Check for oil leakage and replace if necessary. | | | | √ | √ | √ |
| 12 | * | Stabilizer bushes | • Check for cracks or other damage, and replace if necessary. | | | | √ | √ | √ |
| 13 | * | Knuckle pivots | • Lubricate with lithium-soap-based grease. | | | | √ | √ | √ |
| 14 | * | Steering shaft | • Lubricate with lithium-soap-based grease. | | | | √ | √ | √ |
| 15 | * | Steering system | • Check operation and repair or replace if damaged.<br>• Check toe-in and adjust if necessary. | | √ | √ | √ | √ | √ |
| 16 | * | Axle boots | • Check for cracks or other damage, and replace if necessary. | | √ | √ | √ | √ | √ |
| 17 | | Engine oil | • Change.<br>• Check ATV for oil leakage, and correct if necessary. | | √ | | √ | √ | √ |
| 18 | | Engine oil filter element | • Clean or replace if necessary. | | √ | | √ | | √ |
| 19 | | Engine oil strainer | • Clean. | | √ | | √ | | √ |
| 20 | | Differential gear oil | • Change.<br>• Check ATV for oil leakage, and correct if necessary. | | √ | | | | √ |
| 21 | | Final gear oil | • Change.<br>• Check ATV for oil leakage, and correct if necessary. | | √ | | √ | √ | |
| 22 | * | Moving parts and cables | • Lubricate. | | | √ | √ | √ | √ |

| NO. | | ITEM | CHECK OR MAINTENANCE JOB | Whichever comes first ⇨ | | INITIAL | | | EVERY | |
|---|---|---|---|---|---|---|---|---|---|---|
| | | | | | month | 1 | 3 | 6 | 6 | 12 |
| | | | | | km (mi) | 320 (200) | 1300 (800) | 2500 (1600) | 2500 (1600) | 5000 (3200) |
| | | | | | hours | 20 | 80 | 160 | 160 | 320 |
| 23 | * | **Reverse lock release cable** | • Check operation and adjust or replace if necessary. | | | | | √ | √ | √ |
| 24 | * | **Throttle lever housing and cable** | • Check operation and correct if necessary.<br>• Check throttle cable free play and adjust if necessary.<br>• Lubricate throttle lever housing and cable. | | | √ | √ | √ | √ | √ |
| 25 | * | **Front and rear brake switches** | • Check operation and correct if necessary. | | | √ | √ | √ | √ | √ |
| 26 | * | **Lights and switches** | • Check operation and correct if necessary.<br>• Adjust headlight beams. | | | √ | √ | √ | √ | √ |

EBU28390

**NOTE:**

- The air filter needs more frequent service if you are riding in unusually wet or dusty areas.
- Hydraulic brake service
  - Regularly check and, if necessary, correct the brake fluid level.
  - Every two years replace the internal components of the brake master cylinder and calipers, and change the brake fluid.
  - Replace the brake hoses every four years and if cracked or damaged.

# SEAT, CARRIERS, FENDERS, FUEL TANK AND AIR FILTER

## SEAT

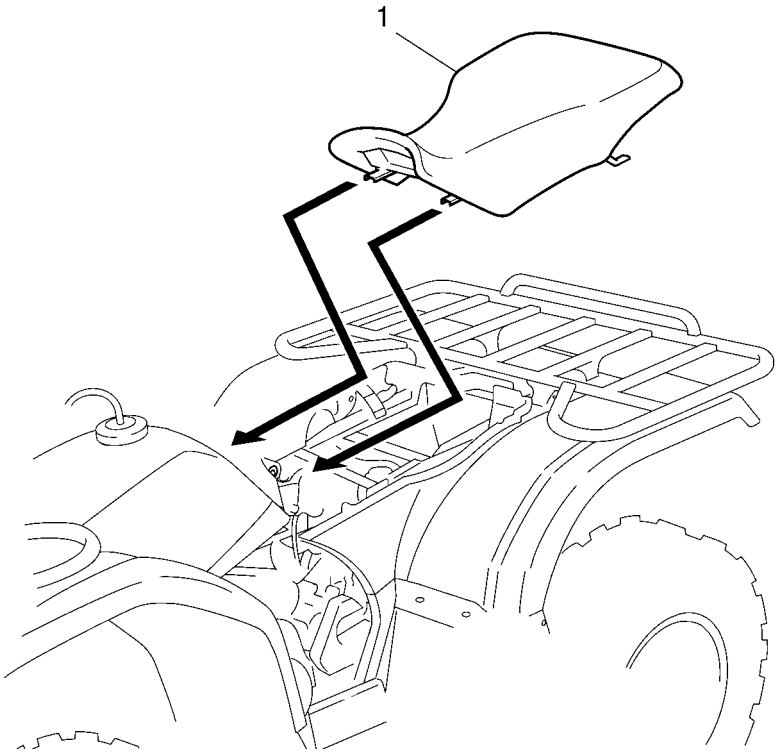


| Order | Job/Part | Q'ty | Remarks |
|---|---|---|---|
| 1 | **Removing the seat**<br>Seat | 1 | Remove the parts in the order listed.<br>**NOTE:**<br>Pull up the seat lock lever, then pull up on the rear of the seat.<br>For installation, reverse the removal procedure. |

## FRONT CARRIER, FRONT GUARD AND FRONT FENDER

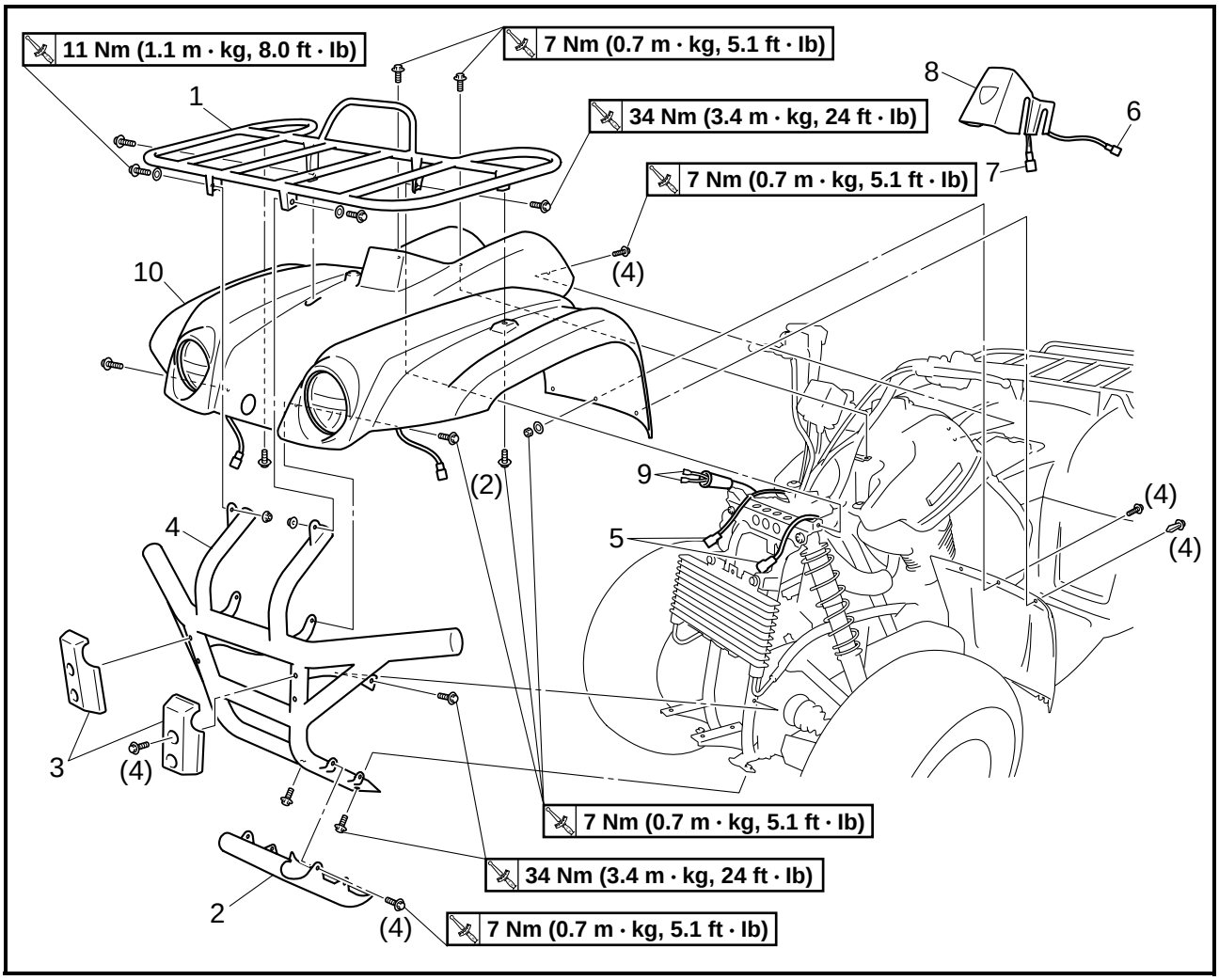


| Order | Job/Part | Q'ty | Remarks |
|---|---|---|---|
| | **Removing the front carrier, front guard and front fender** | | Remove the parts in the order listed. |
| | Seat | | Refer to "SEAT". |
| 1 | Front carrier | 1 | |
| 2 | Front skid plate | 1 | |
| 3 | Front guard cover | 2 | |
| 4 | Front guard | 1 | |
| 5 | Headlight coupler | 2 | Disconnect. |
| 6 | Main switch coupler | 1 | Disconnect. |
| 7 | Indicator light coupler | 1 | Disconnect. |
| 8 | Handlebar cover | 1 | |
| 9 | Auxiliary DC jack connector | 2 | Disconnect. |
| 10 | Front fender | 1 | |
| | | | For installation, reverse the removal procedure. |

## REAR CARRIER AND REAR FENDER

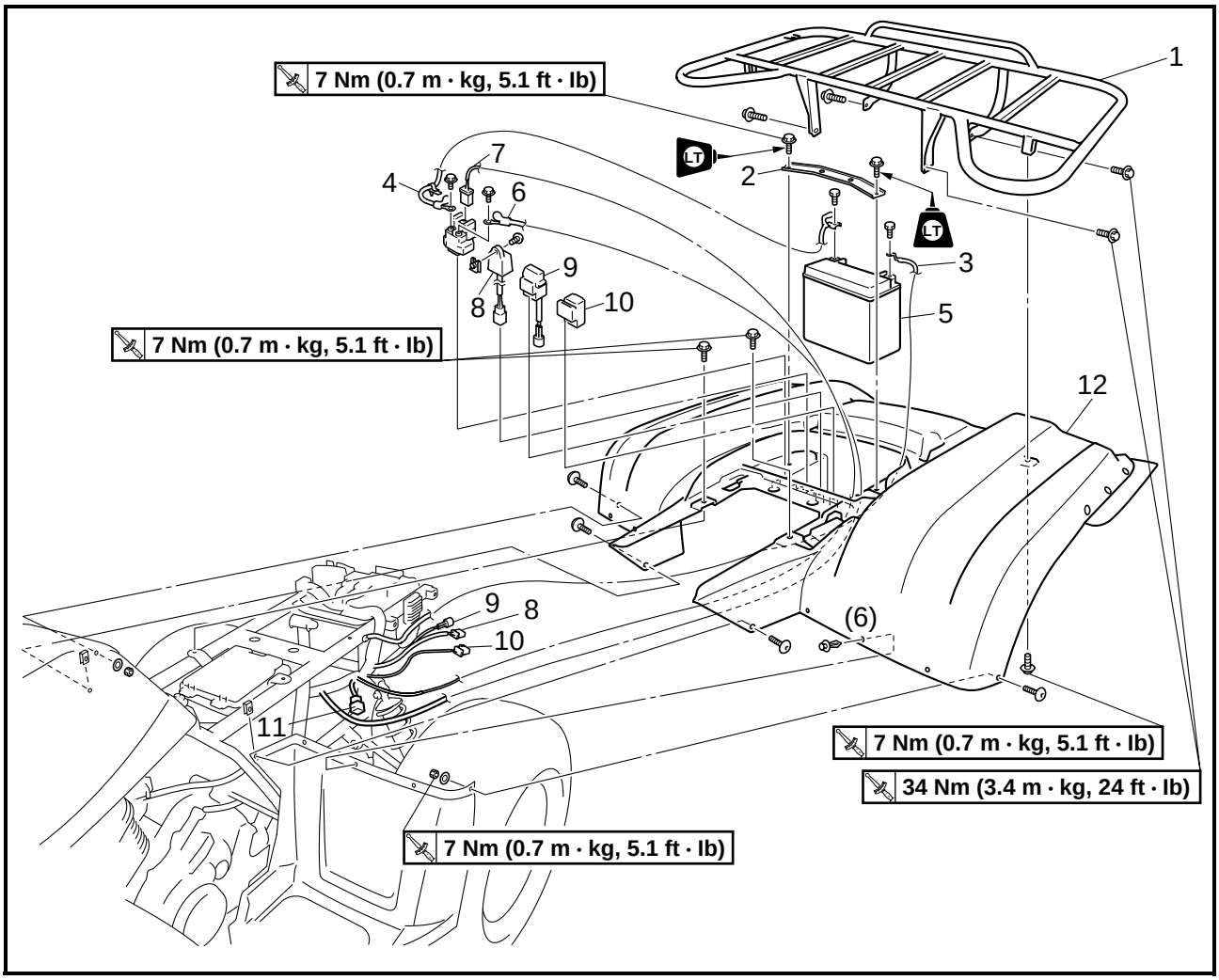


| Order | Job/Part | Q'ty | Remarks |
|---|---|---|---|
| | **Removing the rear carrier and rear fender** | | Remove the parts in the order listed. |
| | Seat | | Refer to "SEAT". |
| | Fuel tank | | Refer to "FUEL TANK AND AIR FILTER CASE". |
| 1 | Rear carrier | 1 | |
| 2 | Battery holding bracket | 1 | |
| 3 | Negative battery lead | 1 | Disconnect. **CAUTION: First disconnect the negative lead, then disconnect the positive lead.** |
| 4 | Positive battery lead | 1 | Disconnect. |
| 5 | Battery | 1 | |
| 6 | Starter relay ground lead | 1 | Disconnect. |

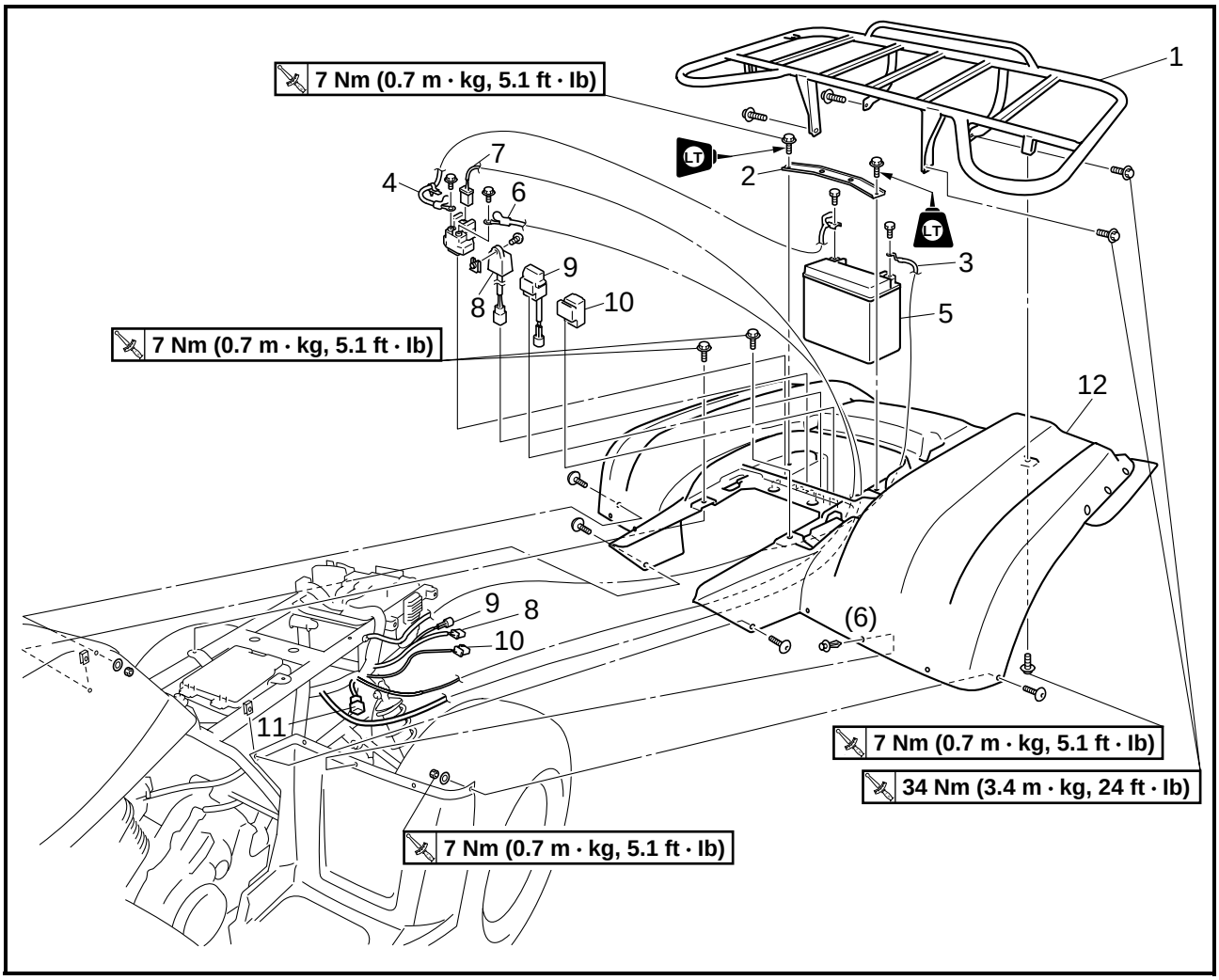


| Order | Job/Part | Q'ty | Remarks |
|---|---|---|---|
| 7 | Starter relay coupler | 1 | Disconnect. |
| 8 | Oil cooler fan motor control unit | 1 | |
| 9 | Four-wheel-drive motor fuse | 1 | |
| 10 | Oil cooler fan motor relay | 1 | |
| 11 | Fuse box coupler | 1 | Disconnect. |
| 12 | Rear fender | 1 | |
| | | | For installation, reverse the removal procedure. |

## FUEL TANK AND AIR FILTER CASE

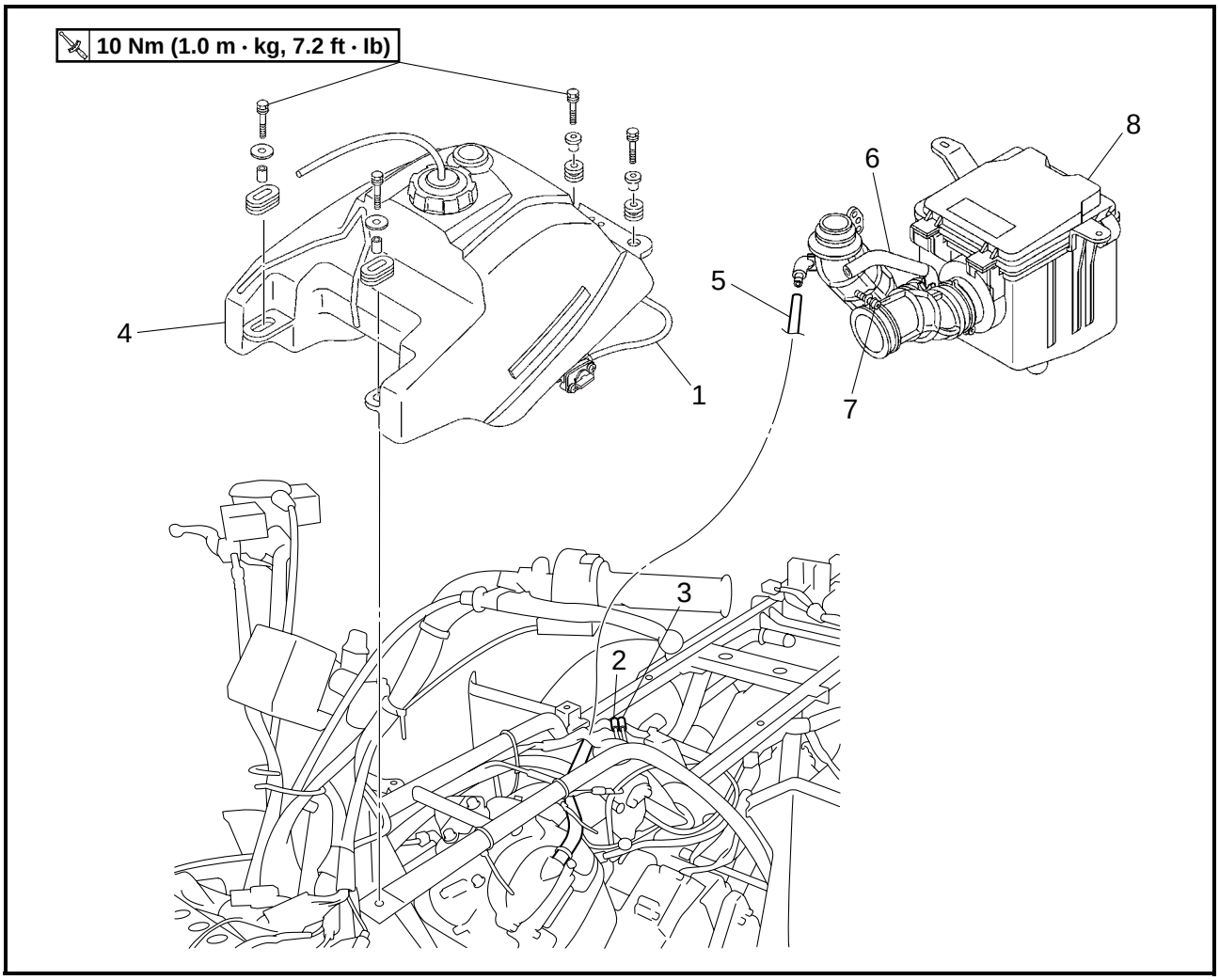


| Order | Job/Part | Q'ty | Remarks |
|---|---|---|---|
| | **Removing the fuel tank and air filter case** | | Remove the parts in the order listed. |
| | Seat | | Refer to "SEAT". |
| | Rear fender | | Refer to "REAR CARRIER AND REAR FENDER". |
| 1 | Fuel hose | 1 | **NOTE:** Before disconnecting the fuel hose, turn the fuel cock to "OFF". |
| 2 | Final gear case breather hose | 1 | Disconnect. |
| 3 | Float chamber air vent hose | 1 | Disconnect. |
| 4 | Fuel tank | 1 | **NOTE:** When installing the fuel tank, pass the fuel tank breather hose through the hole of the handlebar protector. |

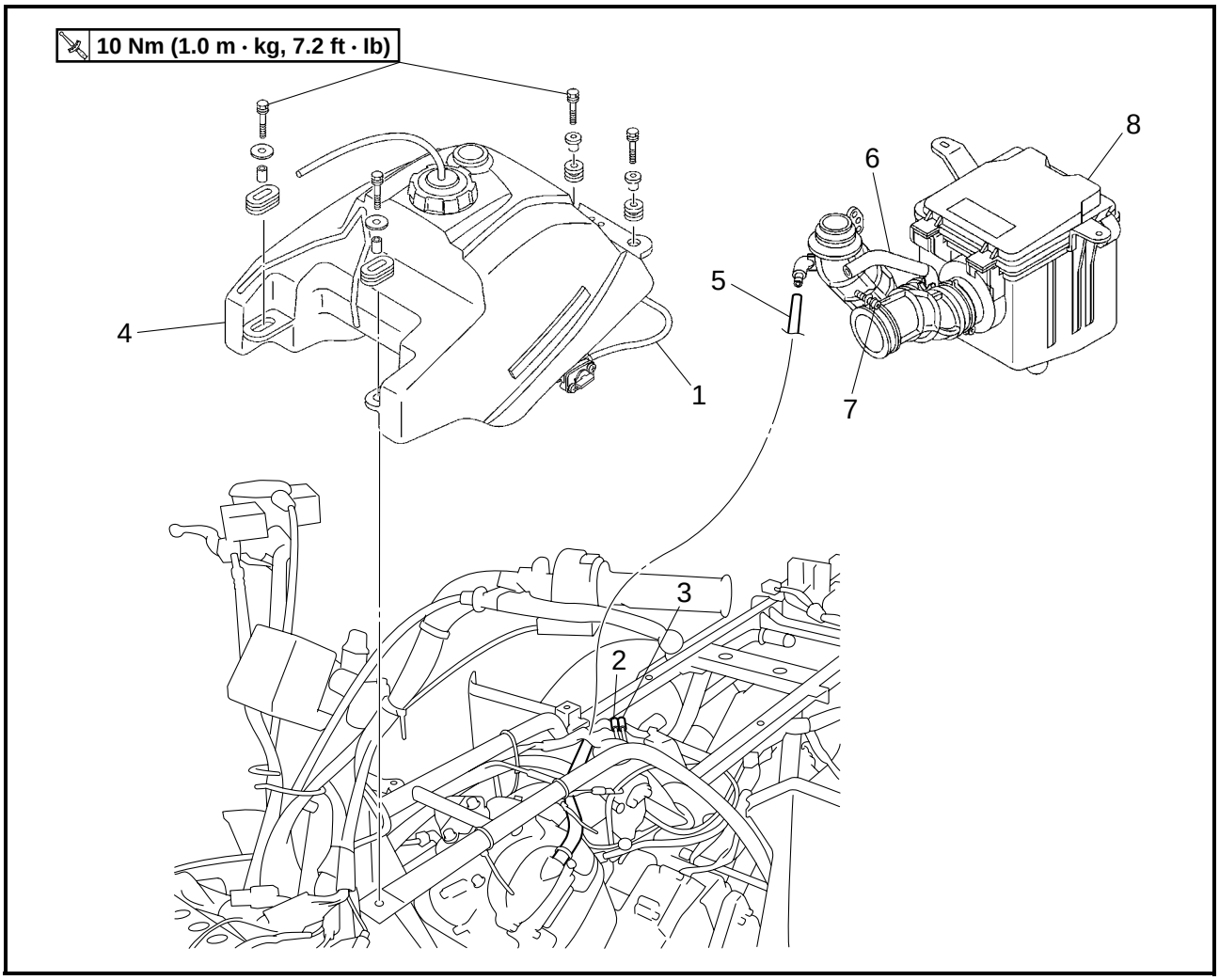


| Order | Job/Part | Q'ty | Remarks |
|---|---|---|---|
| 5 | Cylinder head breather hose | 1 | Disconnect. |
| 6 | Carburetor breather hose | 1 | Disconnect. |
| 7 | Air filter case clamp | 1 | Loosen. |
| 8 | Air filter case assembly | 1 | |
| | | | For installation, reverse the removal procedure. |

# FOOTREST BOARDS

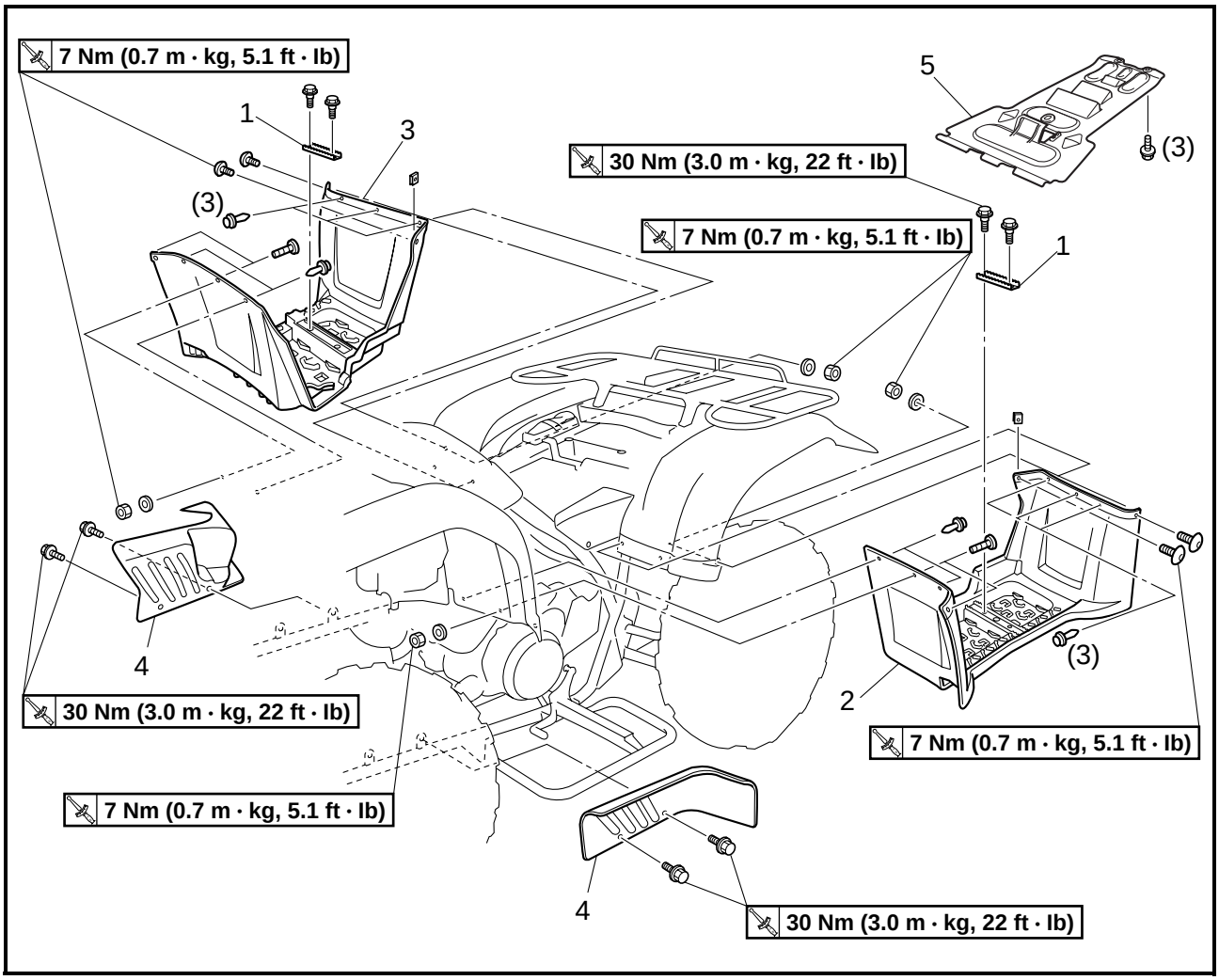


| Order | Job/Part | Q'ty | Remarks |
|---|---|---|---|
| | **Removing the footrest boards** | | Remove the parts in the order listed. |
| 1 | Footrest | 2 | |
| 2 | Left footrest board | 1 | |
| 3 | Right footrest board | 1 | |
| 4 | Front fender inner panel | 2 | |
| 5 | Rear skid plate | 1 | Refer to "INSTALLING THE REAR SKID PLATE".<br>For installation, reverse the removal procedure. |

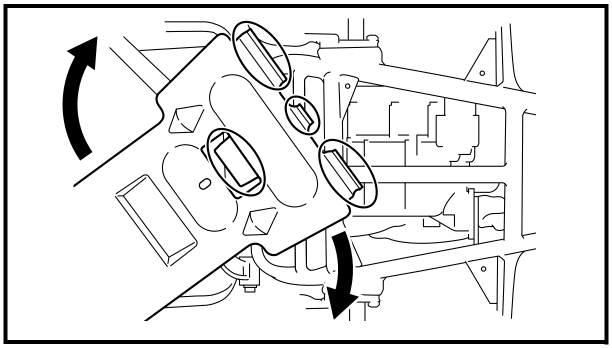

### INSTALLING THE REAR SKID PLATE

1. Install:
   - rear skid plate

▼▼▼▼▼▼▼▼▼▼▼▼▼▼▼▼▼▼▼▼▼▼▼▼▼▼▼▼▼▼▼▼▼▼▼

a. Position the rear skid plate at an angle to the frame, and then insert the inner projections on the plate between the frame cross members.

b. Rotate the rear skid plate so that it is parallel to the frame, making sure to hook the outer projections on the frame cross member.

▲▲▲▲▲▲▲▲▲▲▲▲▲▲▲▲▲▲▲▲▲▲▲▲▲▲▲▲▲▲▲▲▲▲▲

# ENGINE

## ADJUSTING THE VALVE CLEARANCE

The following procedure applies to all of the valves.

**NOTE:**

- Valve clearance adjustment should be made on a cold engine, at room temperature.
- When the valve clearance is to be measured or adjusted, the piston must be at top dead center (TDC) on the compression stroke.

1. Remove:
   - seat
   - front carrier
   - front fender
   - fuel tank

   Refer to “SEAT, CARRIERS, FENDERS, FUEL TANK AND AIR FILTER”.

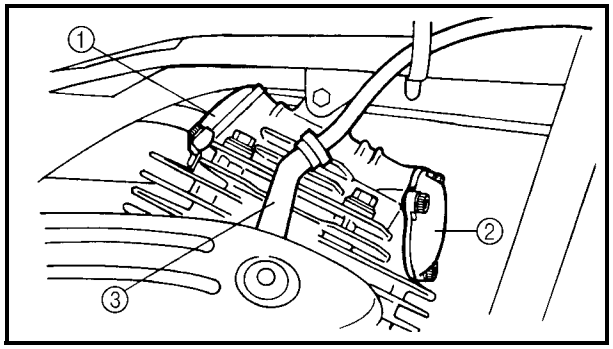


2. Remove:
   - intake tappet cover ①
   - exhaust tappet cover ②
   - camshaft sprocket cover
3. Disconnect:
   - spark plug cap ③
4. Remove:
   - spark plug

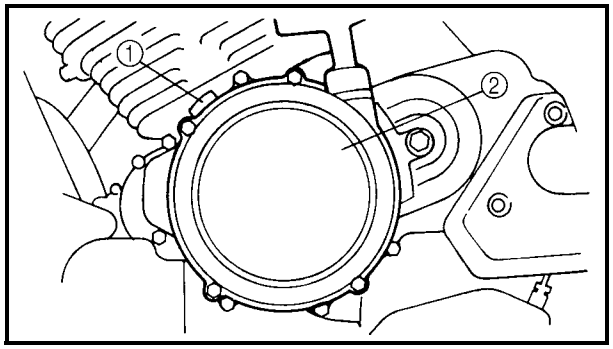


5. Remove:
   - timing mark accessing screw ①
   - recoil starter ②
6. Check:
   - valve clearance

   Out of specification → Adjust.

**Valve clearance (cold)**
**Intake**
**0.06 ~ 0.10 mm**
**(0.002 ~ 0.004 in)**
**Exhaust**
**0.16 ~ 0.20 mm**
**(0.006 ~ 0.008 in)**

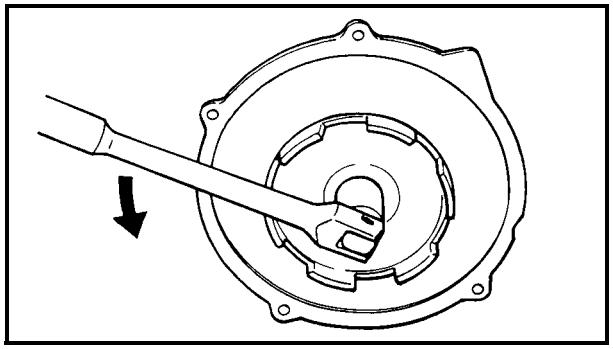

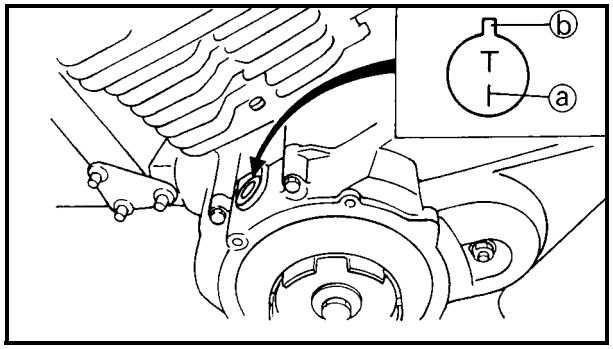


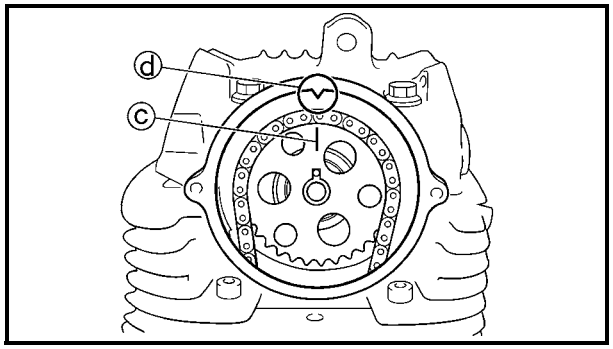


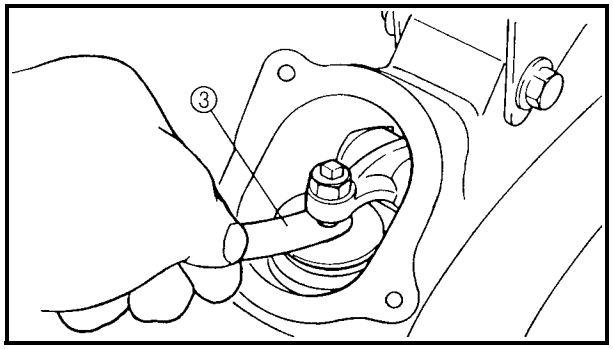


a. Turn the crankshaft counterclockwise with a wrench.
b. When the piston is at the top dead center (TDC) on the compression stroke, align the "I" mark ⓐ on the AC magneto rotor with the stationary pointer ⓑ on the AC magneto cover.

**NOTE:**
- To position the piston at the top dead center (TDC) on the compression stroke, align the "I" mark ⓒ on the camshaft sprocket with the stationary pointer ⓓ on the cylinder head.
- If there is no clearance, rotate the crankshaft counterclockwise one turn.

c. Measure the valve clearance using a thickness gauge ③.

**Thickness gauge**
**90890-03079**
**Narrow gauge set**
**YM-34483**

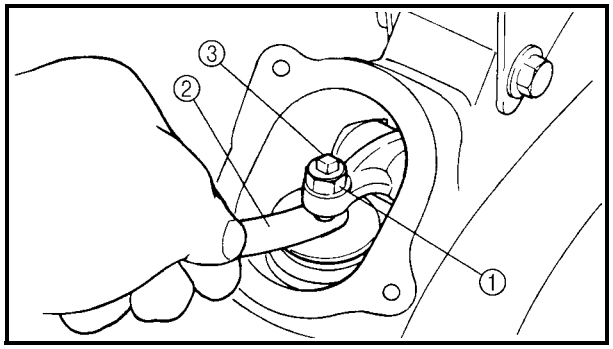


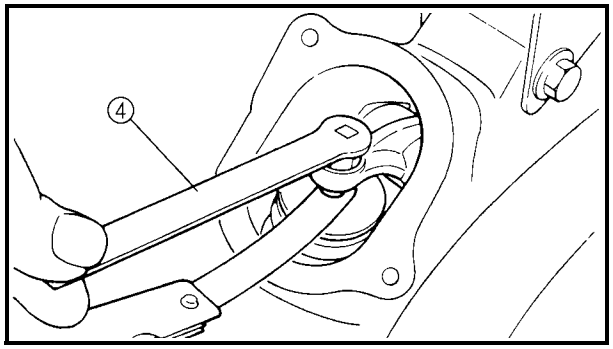


7. Adjust:
   - valve clearance

▼▼▼▼▼▼▼▼▼▼▼▼▼▼▼▼▼▼▼▼▼▼▼▼▼▼▼▼▼▼▼▼▼▼

a. Loosen the locknut ①.
b. Insert a thickness gauge ② between the adjuster end and the valve end.
c. Turn the adjuster ③ clockwise or counter-clockwise with the tappet adjusting tool ④ until the proper clearance is obtained.

**Tappet adjusting tool (4 mm)**
**90890-04133**
**Valve adjustment wrench 3 mm & 4 mm**
**YM-08035-A**

d. Hold the adjuster to prevent it from moving and then tighten the locknut.

**Locknut**
**20 Nm (2.0 m · kg, 14 ft · lb)**

e. Measure the valve clearance again.
f. If the valve clearance is still out of specification, repeat all of the valve clearance adjustment steps until the specified clearance is obtained.

▲▲▲▲▲▲▲▲▲▲▲▲▲▲▲▲▲▲▲▲▲▲▲▲▲▲▲▲▲▲▲▲▲▲

8. Install:
   - timing mark accessing screw
   - spark plug — **18 Nm (1.8 m · kg, 13 ft · lb)**
   - O-ring New
   - camshaft sprocket cover — **10 Nm (1.0 m · kg, 7.2 ft · lb)**
   - O-ring New
   - intake tappet cover — **10 Nm (1.0 m · kg, 7.2 ft · lb)**
   - O-ring New
   - exhaust tappet cover — **10 Nm (1.0 m · kg, 7.2 ft · lb)**

**NOTE:**
Install the tappet covers with the ridge facing up ①.

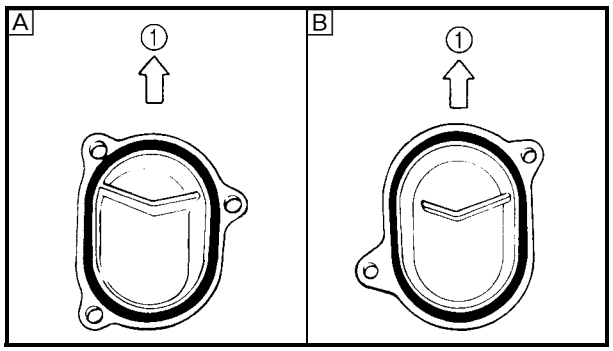


A Exhaust
B Intake

9. Install:
   - fuel tank
   - front fender
   - front carrier
   - seat

   Refer to “SEAT, CARRIERS, FENDERS, FUEL TANK AND AIR FILTER”.

## ADJUSTING THE IDLING SPEED

1. Start the engine and let it warm up for several minutes.
2. Attach:
   - digital tachometer
     (to the spark plug lead)

| | |
|---|---|
| | **Digital tachometer**<br>**90890-06760, YU-39951-B** |

3. Check:
   - engine idling speed

   Out of specification → Adjust.

| | |
|---|---|
| | **Engine idling speed**<br>**1,450 ~ 1,550 r/min** |

4. Adjust:
   - engine idling speed

▼▼▼▼▼▼▼▼▼▼▼▼▼▼▼▼▼▼▼▼▼▼▼▼▼▼▼▼▼▼▼▼▼▼▼▼

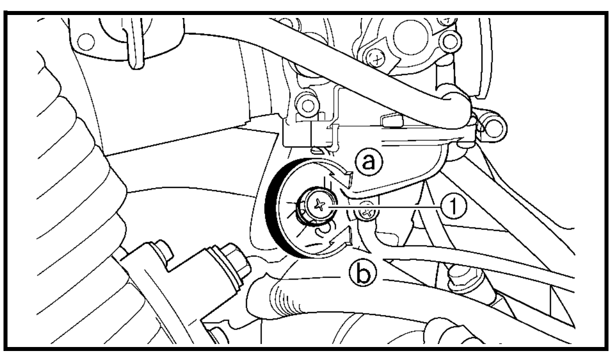


a. Turn the throttle stop screw ① in direction ⓐ or ⓑ until the specified idling speed is obtained.

| | |
|---|---|
| **Direction ⓐ** | **Idling speed increases.** |
| **Direction ⓑ** | **Idling speed decreases.** |

▲▲▲▲▲▲▲▲▲▲▲▲▲▲▲▲▲▲▲▲▲▲▲▲▲▲▲▲▲▲▲▲▲▲▲▲

5. Detach:
   - tachometer
6. Adjust:
   - throttle lever free play

   Refer to “ADJUSTING THE THROTTLE LEVER FREE PLAY”.

| | |
|---|---|
| | **Throttle lever free play**<br>**3 ~ 5 mm (0.12 ~ 0.20 in)** |

## ADJUSTING THE THROTTLE LEVER FREE PLAY

**NOTE:**
Engine idling speed should be adjusted properly before adjusting the throttle lever free play.

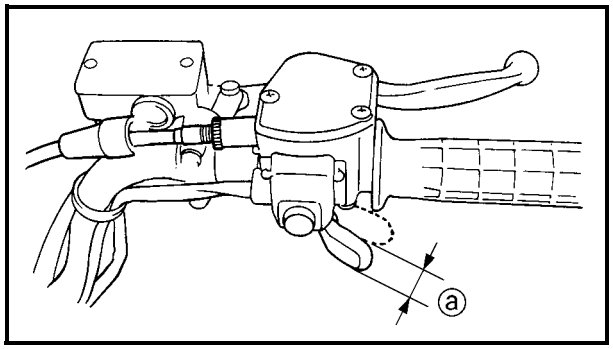


1. Measure:
   - throttle lever free play ⓐ
     Out of specification → Adjust.

| | |
|---|---|
| | **Throttle lever free play**<br>**3 ~ 5 mm (0.12 ~ 0.20 in)** |

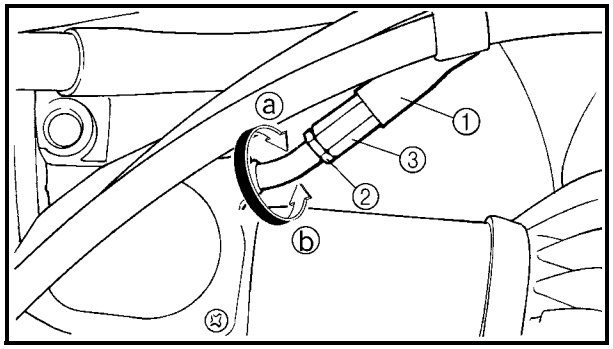


2. Adjust:
   - throttle lever free play

▼▼▼▼▼▼▼▼▼▼▼▼▼▼▼▼▼▼▼▼▼▼▼▼▼▼▼▼▼▼▼▼▼▼

**First step:**

a. Slide back the rubber cover ①.
b. Loosen the locknut ② on the carburetor side.
c. Turn the adjuster ③ in direction ⓐ or ⓑ until the correct free play is obtained.

| | |
|---|---|
| **Direction ⓐ** | **Free play increases.** |
| **Direction ⓑ** | **Free play decreases.** |

d. Tighten the locknut ②.
e. Slide the rubber cover to its original position.

**NOTE:**
If the free play cannot be adjusted here, adjust it at the throttle lever side of the cable.

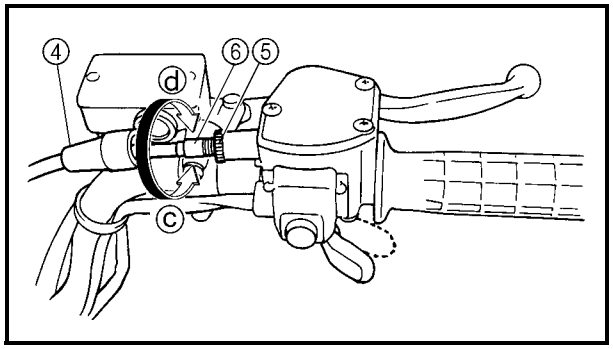


**Second step:**

f. Slide back the adjuster cover ④.
g. Loosen the locknut ⑤.
h. Turn the adjuster ⑥ in direction ⓒ or ⓓ until the correct free play is obtained.

| | |
|---|---|
| **Direction ⓒ** | **Free play increases.** |
| **Direction ⓓ** | **Free play decreases.** |

i. Tighten the locknut ⑤.
j. Slide the rubber cover to its original position.

**WARNING**

**After adjusting the free play, turn the handlebar to the right and left to make sure that the engine idling speed does not increase.**

▲▲▲▲▲▲▲▲▲▲▲▲▲▲▲▲▲▲▲▲▲▲▲▲▲▲▲▲▲▲▲▲

**ADJUSTING THE SPEED LIMITER**

The speed limiter keeps the throttle from becoming fully-opened even when the throttle lever is applied to the maximum position. Screwing in the adjusting screw stops the engine speed from increasing.

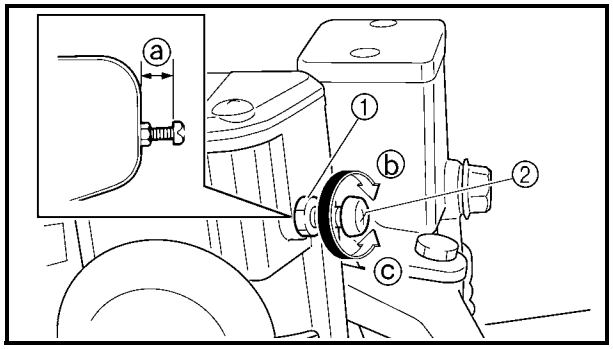


1. Measure:
   - speed limiter length ⓐ
     Out of specification → Adjust.

| | |
|---|---|
| | **Speed limiter length**<br>**Less than 12 mm (0.47 in)** |

2. Adjust:
   - speed limiter length

▼▼▼▼▼▼▼▼▼▼▼▼▼▼▼▼▼▼▼▼▼▼▼▼▼▼▼▼▼▼▼▼

a. Loosen the locknut ①.
b. Turn the adjuster ② in direction ⓑ or ⓒ until the specified speed limiter length is obtained.

| | |
|---|---|
| **Direction ⓑ** | **Speed limiter length decreases.** |
| **Direction ⓒ** | **Speed limiter length increases.** |

c. Tighten the locknut.

**WARNING**

- **Particularly for a beginner rider, the speed limiter should be screwed in completely. Screw it out little by little as their riding technique improves. Never remove the speed limiter for a beginning rider.**
- **For proper throttle lever operation do not turn out the adjuster more than 12 mm (0.47 in). Also, always adjust the throttle lever free play to 3 ~ 5 mm (0.12 ~ 0.20 in).**

▲▲▲▲▲▲▲▲▲▲▲▲▲▲▲▲▲▲▲▲▲▲▲▲▲▲▲▲▲▲▲▲

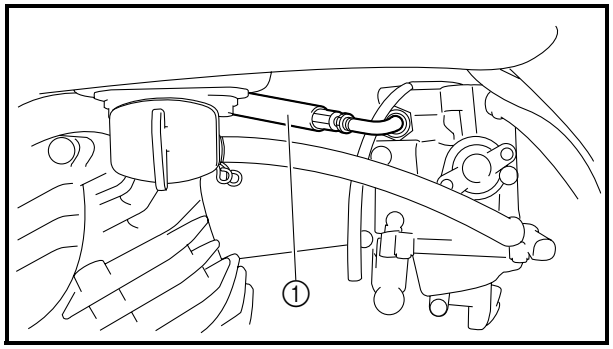


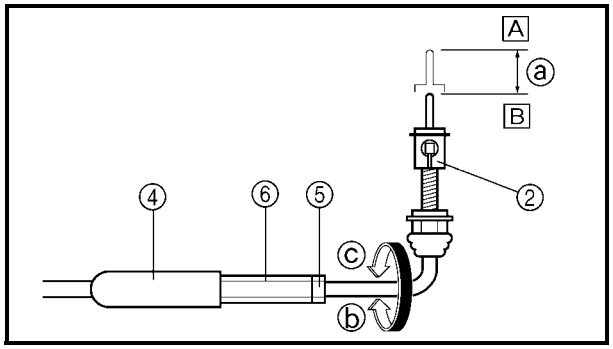


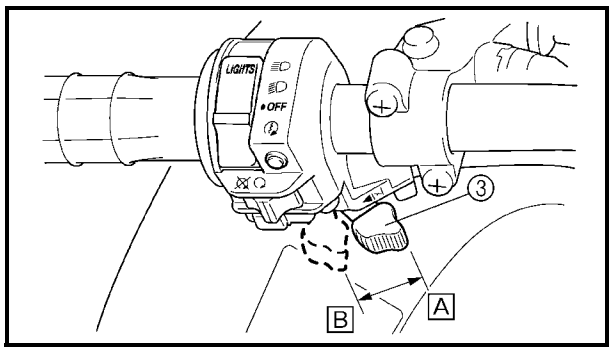


**ADJUSTING THE STARTER CABLE**

1. Adjust:
   - starter cable

▼▼▼▼▼▼▼▼▼▼▼▼▼▼▼▼▼▼▼▼▼▼▼▼▼▼▼▼▼▼▼▼

a. Disconnect the starter cable ① from the carburetor body.

**NOTE:**

Do not remove the starter plunger ② from the starter cable.

b. Measure the starter plunger stroke distance ⓐ of the starter lever ③ fully close to fully open position. If the distance is out of specification adjust it as described below.

| | |
|---|---|
| | **Starter plunger stroke distance 14.2 mm (0.56 in)** |

A Fully closed position
B Fully open position

c. Pull back the boot ④.
d. Loosen the locknut ⑤.
e. Turn the adjuster ⑥ in direction ⓑ or ⓒ until the correct free play is obtained.

| | |
|---|---|
| **Direction ⓑ** | **Free play increased.** |
| **Direction ⓒ** | **Free play decreased.** |

f. Tighten the locknut ⑤.
g. Push in the boot ④.

h. Connect the starter cable to the carburetor.

**WARNING**

**After adjusting the cable, turn the handlebar to right and left, and make sure that the engine idling speed does not increase.**

▲▲▲▲▲▲▲▲▲▲▲▲▲▲▲▲▲▲▲▲▲▲▲▲▲▲▲▲▲▲▲▲

**CHECKING THE SPARK PLUG**

1. Remove:
   - spark plug
2. Check:
   - spark plug type
     Incorrect → Replace.

| **Standard spark plug** |
|---|
| **DR8EA/NGK** |

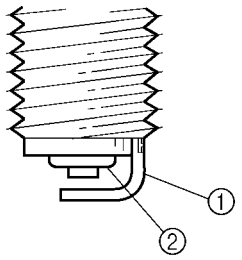


3. Inspect:
   - electrode ①
     Wear/damage → Replace.
   - insulator ②
     Abnormal color → Replace.
     Normal color is a medium-to-light tan color.
4. Clean:
   - spark plug
     (with a spark plug cleaner or wire brush)

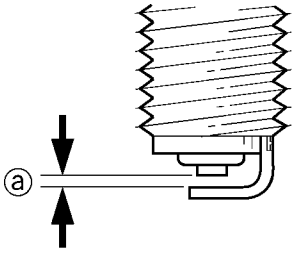


5. Measure:
   - spark plug gap ⓐ
     Use a wire gauge or feeler gauge.
     Out of specification → Regap.

| | |
|---|---|
| | **Spark plug gap**<br>**0.6 ~ 0.7 mm (0.024 ~ 0.028 in)** |

6. Tighten:
   - spark plug — **18 Nm (1.8 m · kg, 13 ft · lb)**

**NOTE:**

Before installing a spark plug, clean the gasket surface and plug surface.

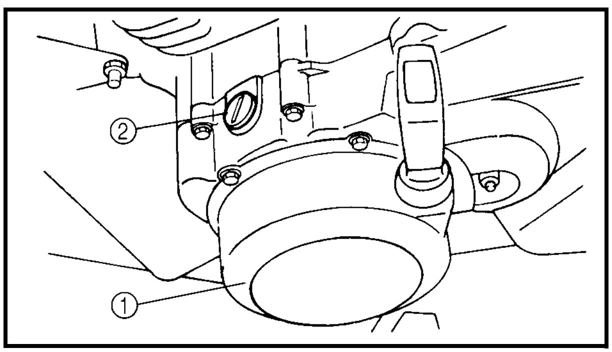


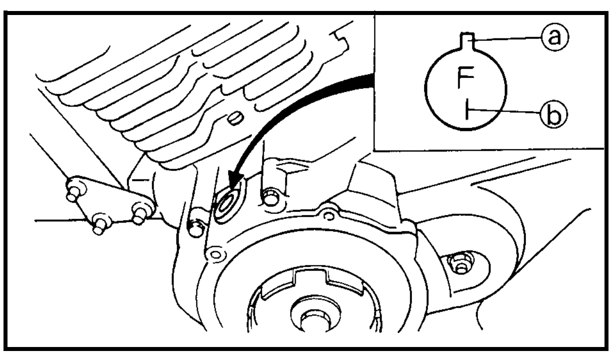


## CHECKING THE IGNITION TIMING

**NOTE:**

Engine idling speed and throttle cable free play should be adjusted properly before checking the ignition timing.

1. Attach:
   - digital tachometer
   - timing light
     (to spark plug lead)

| | |
|---|---|
| | **Digital tachometer**<br>**90890-06760, YU-39951-B**<br>**Timing light**<br>**90890-03141**<br>**Inductive clamp timing light**<br>**YU-03141** |

2. Check:
   - ignition timing

▼▼▼▼▼▼▼▼▼▼▼▼▼▼▼▼▼▼▼▼▼▼▼▼▼▼▼▼▼▼▼▼▼▼

a. Warm up the engine and keep it at the specified speed.

| | |
|---|---|
| | **Engine speed**<br>**1,450 ~ 1,550 r/min** |

b. Remove the recoil starter ①.

c. Remove the timing mark accessing screw ②.

d. Visually check the stationary pointer ⓐ to verify it is within the required firing range ⓑ indicated on the AC magneto rotor.
   Incorrect firing range → Check the pulser coil assembly.

e. Install the recoil starter.

**10 Nm (1.0 m · kg, 7.2 ft · lb)**

f. Install the timing mark accessing screw.

▲▲▲▲▲▲▲▲▲▲▲▲▲▲▲▲▲▲▲▲▲▲▲▲▲▲▲▲▲▲▲▲▲▲

## MEASURING THE COMPRESSION PRESSURE

**NOTE:**
Insufficient compression pressure will result in a loss of performance.

1. Check:
   - valve clearance
     Out of specification → Adjust.
     Refer to “ADJUSTING THE VALVE CLEARANCE”.
2. Start the engine and let it warm up for several minutes, and then turn it off.
3. Disconnect:
   - spark plug cap
4. Remove:
   - spark plug

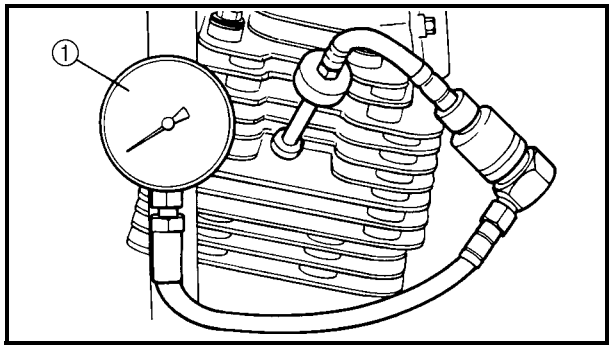


5. Attach:
   - extension
   - compression gauge ①

**Compression gauge**
**90890-03081**
**Engine compression tester**
**YU-33223**
**Extension**
**90890-04082**

6. Measure:
   - compression pressure
     Out of specification → Refer to steps (c) and (d).

**Compression pressure (at sea level)**
**Minimum**
**800 kPa**
**(8.00 kg/cm$^2$, 113.8 psi)**
**Standard**
**920 kPa**
**(9.20 kg/cm$^2$, 130.8 psi)**
**Maximum**
**1,030 kPa**
**(10.30 kg/cm$^2$, 146.5 psi)**

a. Set the main switch to “ON”.
b. With the throttle wide open, crank the engine until the reading on the compression gauge stabilizes.

**WARNING**

**To prevent sparking, ground the spark plug lead before cranking the engine.**

c. If the compression pressure is above the maximum specification, check the cylinder head, valve surfaces and piston crown for carbon deposits.
   Carbon deposits → Eliminate.
d. If the compression pressure is below the minimum specification, squirt a few drops of oil into the cylinder and measure again.
   Refer to the following table.

| Compression pressure (with oil applied into the cylinder) | |
|---|---|
| **Reading** | **Diagnosis** |
| **Higher than without oil** | **Piston ring(s) wear or damage → Repair.** |
| **Same as without oil** | **Piston rings, valves, cylinder head gasket or piston possibly defective → Repair.** |

7. Install:
   - spark plug — **18 Nm (1.8 m · kg, 13 ft · lb)**
8. Connect:
   - spark plug cap

EBS00064

## CHECKING THE ENGINE OIL LEVEL

1. Place the vehicle on a level surface.
2. Check the engine oil level on a cold engine.

**NOTE:**

If the engine was started before checking the oil level, be sure to warm up the engine sufficiently, and then wait at least 10 minutes until the oil settles for an accurate reading.

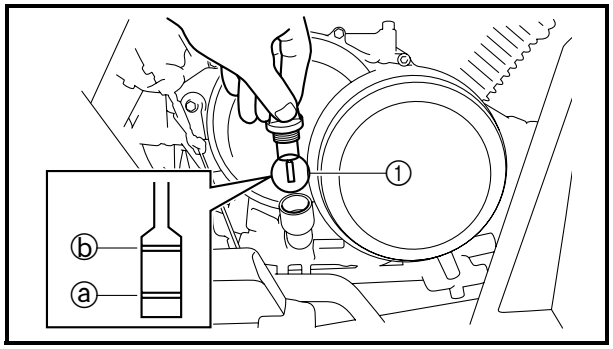


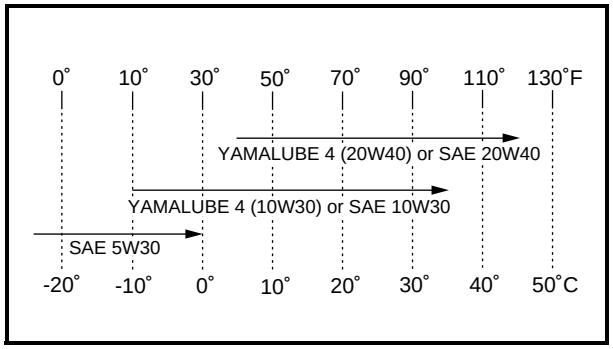


3. Check:
   - engine oil level
     Oil level should be between the minimum level mark ⓐ and maximum level mark ⓑ.
     Oil level low → Add oil to the proper level.

**NOTE:**
Do not screw the dipstick ① in when checking the oil level.

**Recommended engine oil type**
**YAMALUBE 4, SAE5W30, SAE10W30 or SAE20W40**
**Recommended engine oil grade**
**API service SG type or higher, JASO standard MA**

**CAUTION:**
**Do not allow foreign material to enter the crankcase.**

4. Check the engine oil level again.

**CAUTION:**
**Be sure the engine oil is at the correct level, otherwise engine damage may result.**

**WARNING**
**Never remove the dipstick just after high speed operation because the heated oil could spurt out. Wait until the oil cools down before removing the dipstick.**

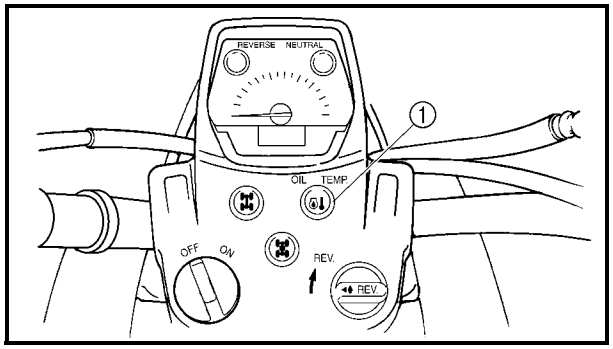


## OIL TEMPERATURE WARNING LIGHT CHECK

① Oil temperature warning light

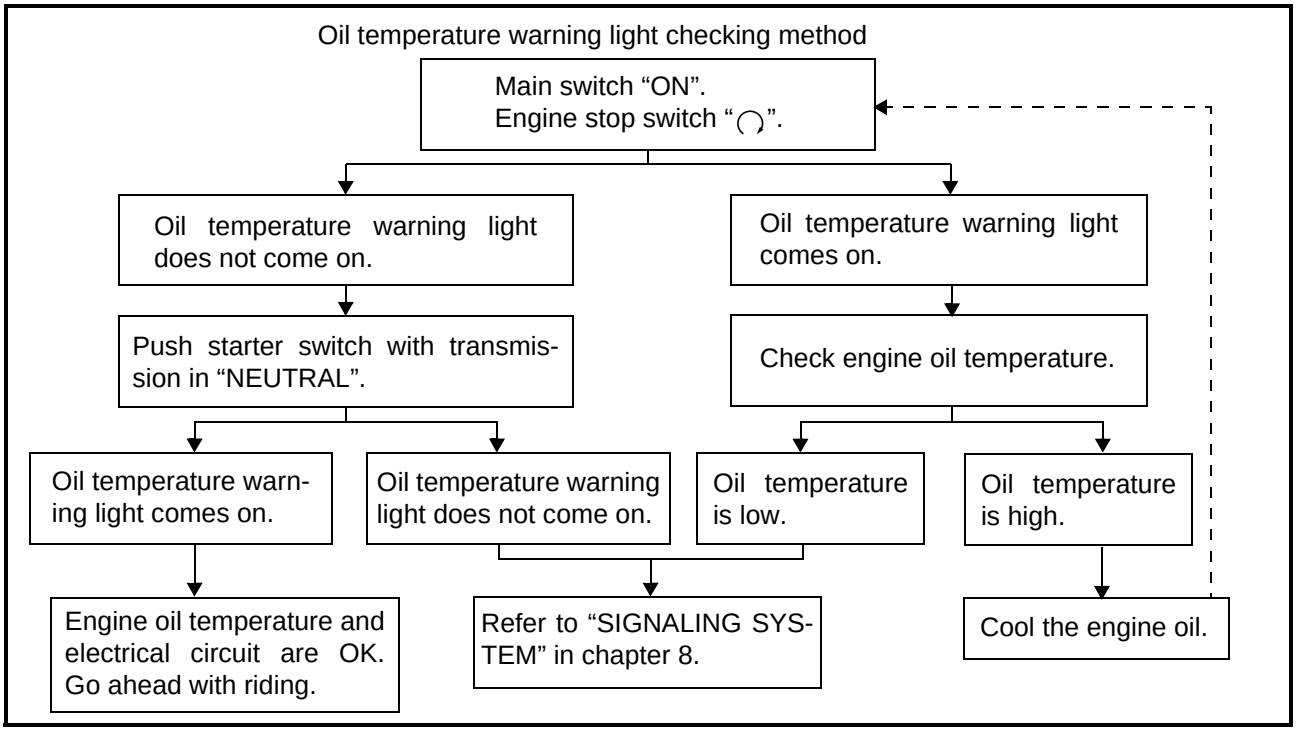


## CHANGING THE ENGINE OIL

1. Start the engine and let it warm up for several minutes, and then turn it off.
2. Place a container under the engine oil drain bolt.

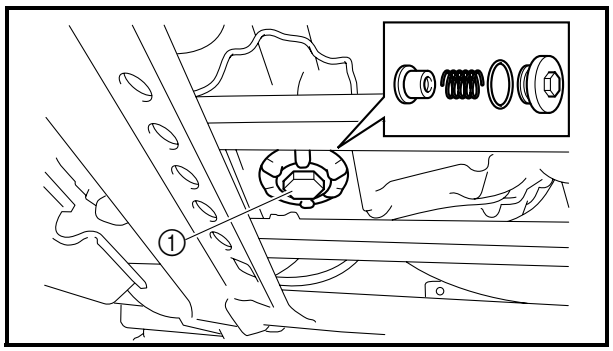


3. Remove:
   - dipstick
   - engine oil drain bolt ①
     (with O-ring, spring and strainer)
4. Drain:
   - engine oil
     (completely from the crankcase)

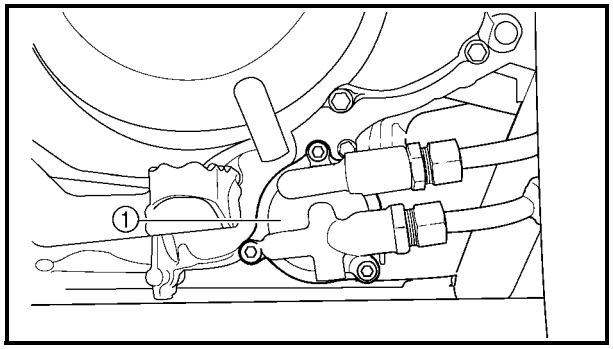


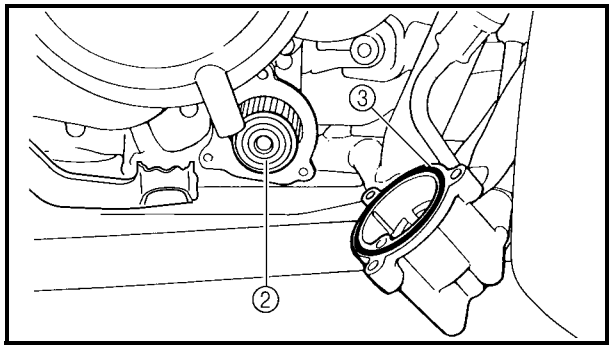


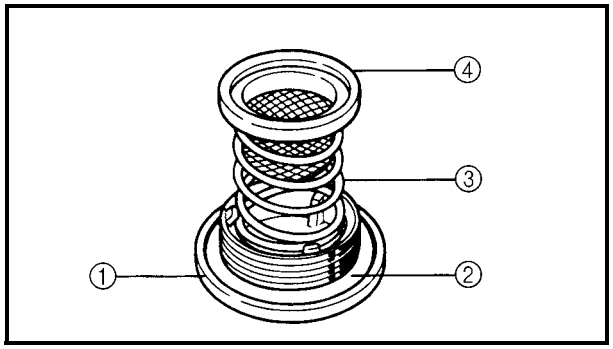


5. If the oil filter is to be replaced during this oil change, remove the following parts and then reinstall them afterwards.

▼▼▼▼▼▼▼▼▼▼▼▼▼▼▼▼▼▼▼▼▼▼▼▼▼▼▼▼▼▼▼▼▼▼▼▼▼▼

a. Remove the oil filter element cover ① and oil filter element ②.
b. Check the O-ring ③ and replace it if it is cracked or damaged.
c. Install the oil filter element and oil filter cover.

| | |
|---|---|
| | **Oil filter cover bolt**<br>**10 Nm (1.0 m · kg, 7.2 ft · lb)** |

▲▲▲▲▲▲▲▲▲▲▲▲▲▲▲▲▲▲▲▲▲▲▲▲▲▲▲▲▲▲▲▲▲▲▲▲▲▲

6. Install:
   - engine oil drain plug

| | |
|---|---|
| | **32 Nm (3.2 m · kg, 23 ft · lb)** |

**CAUTION:**

**Before reinstalling the engine oil drain plug ①, do not forget to install the O-ring ②, compression spring ③ and oil strainer ④.**

7. Fill:
   - crankcase
     (with the specified amount of the recommended engine oil)
     Refer to “CHECKING THE ENGINE OIL LEVEL”.

| | |
|---|---|
| | **Oil quantity**<br>**Total amount**<br>**3.5 L (3.08 Imp qt, 3.70 US qt)**<br>**Periodic oil change**<br>**2.9 L (2.55 Imp qt, 3.07 US qt)**<br>**With oil filter replacement**<br>**3.0 L (2.64 Imp qt, 3.17 US qt)** |

8. Install:
   - dipstick
9. Start the engine, warm it up for several times, and then turn it off.
10. Check:
    - engine
      (for oil leaks)
    - oil level
      Refer to “CHECKING THE ENGINE OIL LEVEL”.

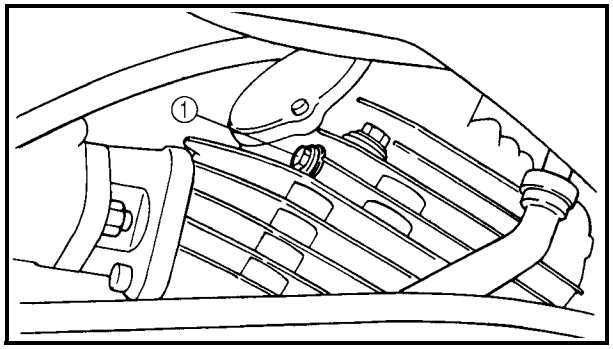


11.Check:
- engine oil pressure

▼▼▼▼▼▼▼▼▼▼▼▼▼▼▼▼▼▼▼▼▼▼▼▼▼▼▼▼▼▼▼▼▼▼

a. Slightly loosen the oil check bolt ① in the cylinder head.
b. Start the engine and keep it idling until oil begins to seep from the oil gallery hole. If no engine oil comes out after one minute, stop the engine immediately so it will not seize.
c. Check the oil passages, oil filter, and oil pump for damage or leakage.
d. Restart the engine after solving the problem(s), and recheck the oil pressure.
e. Stop the engine and tighten the oil check bolt (with gasket) to specification.

| | |
|---|---|
| | **Oil check bolt**<br>**7 Nm (0.7 m · kg, 5.1 ft · lb)** |

▲▲▲▲▲▲▲▲▲▲▲▲▲▲▲▲▲▲▲▲▲▲▲▲▲▲▲▲▲▲▲▲▲▲

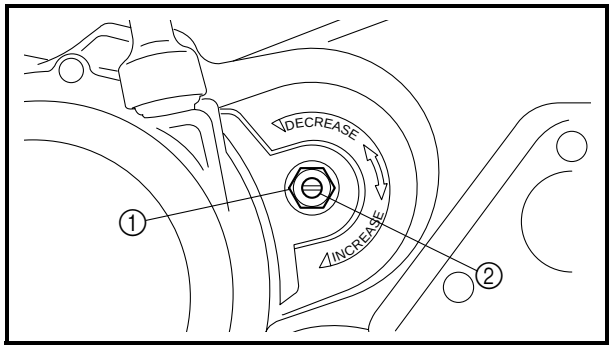


**ADJUSTING THE CLUTCH RELEASE**

1. Adjust:
- clutch release

▼▼▼▼▼▼▼▼▼▼▼▼▼▼▼▼▼▼▼▼▼▼▼▼▼▼▼▼▼▼▼▼▼▼

a. Loosen the locknut ①.
b. Slowly turn the adjuster ② counterclockwise until resistance is felt.
c. Then turn it clockwise 1/8 of a turn.

**CAUTION:**

**Do not start the engine while adjusting the clutch release.**

d. Tighten the locknut.

| | |
|---|---|
| | **Locknut**<br>**20 Nm (2.0 m · kg, 14 ft · lb)** |

▲▲▲▲▲▲▲▲▲▲▲▲▲▲▲▲▲▲▲▲▲▲▲▲▲▲▲▲▲▲▲▲▲▲

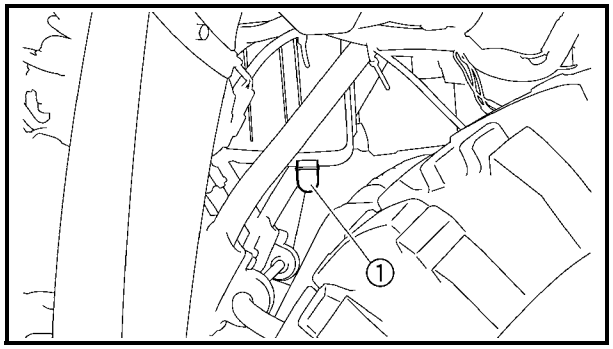


## CLEANING THE AIR FILTER ELEMENT

**NOTE:**

There is a check hose ① at the bottom of the air filter case. If dust and/or water collects in this hose, clean the air filter element and air filter case.

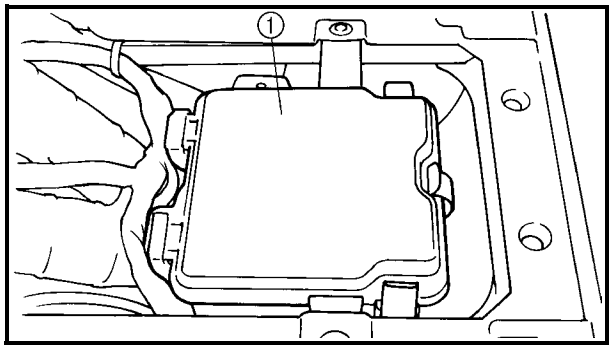


1. Remove:
   - seat
     Refer to “SEAT, CARRIERS, FENDERS, FUEL TANK AND AIR FILTER”.
   - air filter case cover ①

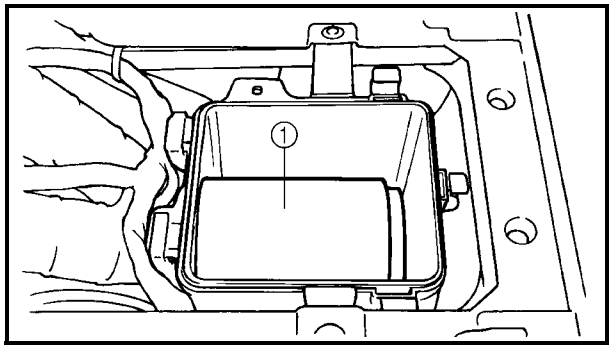


2. Remove:
   - air filter assembly ①

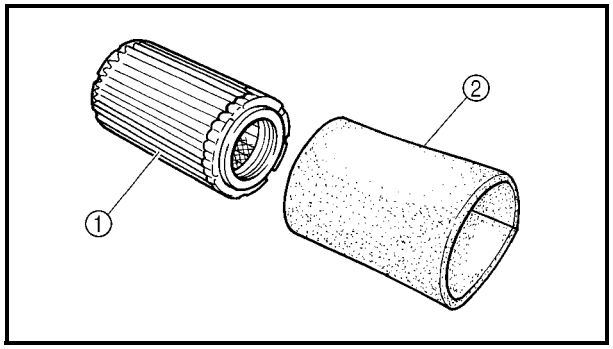


3. Remove:
   - air filter element ①
   - foam cover ②

**CAUTION:**

**The engine should never be run without the air filter; excessive piston and/or cylinder wear may result.**

4. Check:
   - air filter element ①
   - foam cover ②
     Damage → Replace.

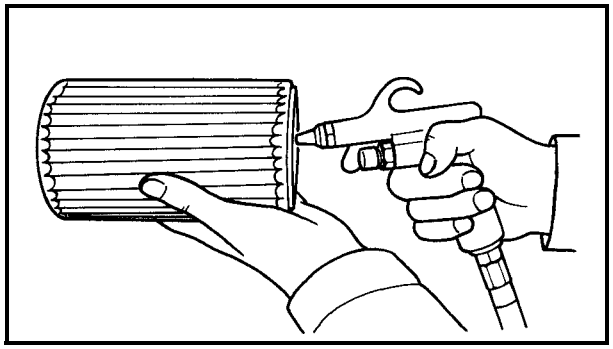

5. Clean:
   - air filter element
     Use compressed air to blow off dust from the inner surface of the element.
6. Clean:
   - foam cover
     Use compressed air to blow off dust from the inner surface of the foam cover.
7. Install:
   - foam cover (to air filter)
8. Install:
   - air filter assembly

**NOTE:**
Make sure its sealing surface matches the sealing surface of the case so there is no air leak.

9. Install:
   - air filter case cover
   - seat
     Refer to “SEAT, CARRIERS, FENDERS, FUEL TANK AND AIR FILTER”.

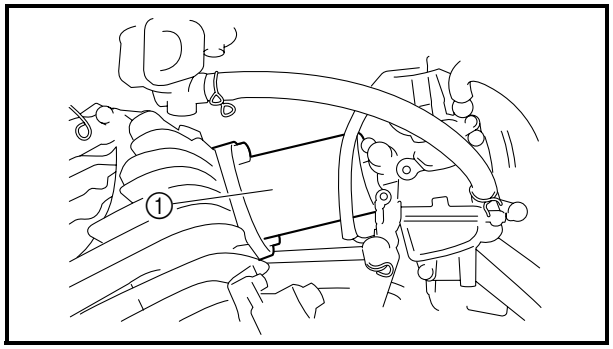


EAS00094
## CHECKING THE CARBURETOR JOINT

1. Check:
   - carburetor joint ①
     Cracks/damage → Replace.
     Refer to “CARBURETOR” in chapter 5.

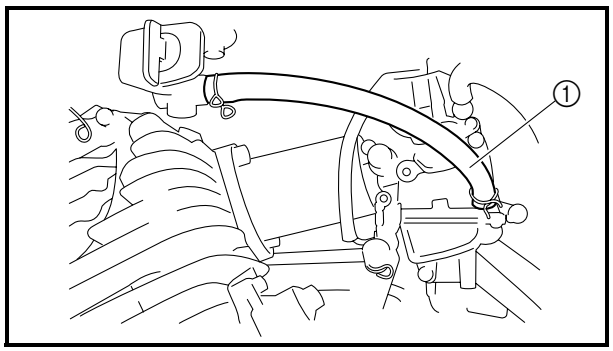


EAS00096
## CHECKING THE FUEL HOSE

1. Check:
   - fuel hose ①
     Cracks/damage → Replace.
     Loose connection → Connect properly.

EAS00098

## CHECKING THE CYLINDER HEAD BREATHER HOSE

1. Remove:
   - seat
   - fuel tank
     Refer to “SEAT, CARRIERS, FENDERS, FUEL TANK AND AIR FILTER”.

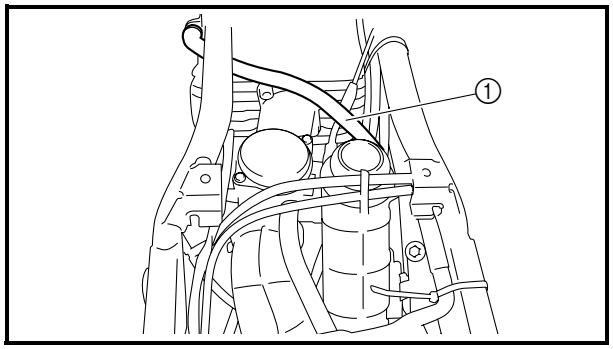


2. Check:
   - cylinder head breather hose ①
     Cracks/damage → Replace.
     Loose connection → Connect properly.

**CAUTION:**

**Make sure the cylinder head breather hose is routed correctly.**

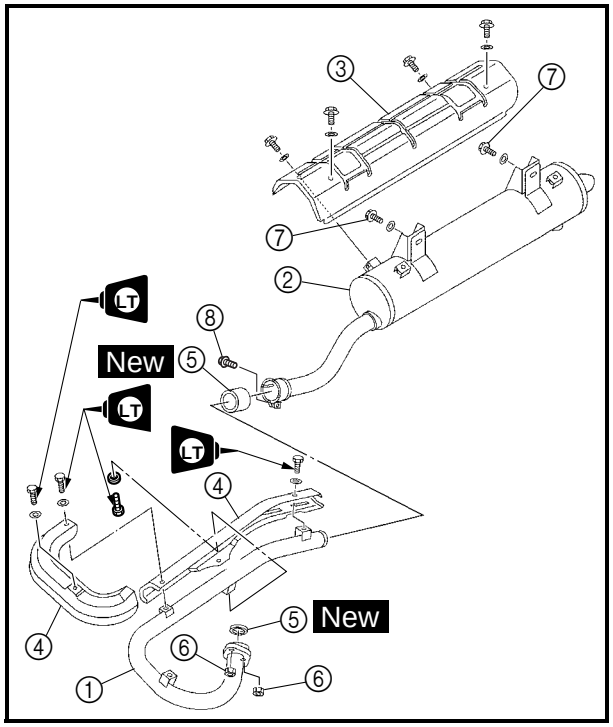


EAS00099

## CHECKING THE EXHAUST SYSTEM

The following procedure applies to all of the exhaust pipe gaskets.

1. Check:
   - exhaust pipe ①
   - muffler ②
   - muffler protector ③
   - exhaust pipe protectors ④
     Cracks/damage → Replace.
   - gaskets ⑤
     Exhaust gas leaks → Replace.
2. Check:
   - tightening torques

**Exhaust pipe nut ⑥**
**10 Nm (1.0 m · kg, 7.2 ft · lb)**
**Muffler bolt ⑦**
**69 Nm (6.9 m · kg, 50 ft · lb)**
**Exhaust pipe and muffler bolt ⑧**
**20 Nm (2.0 m · kg, 14 ft · lb)**

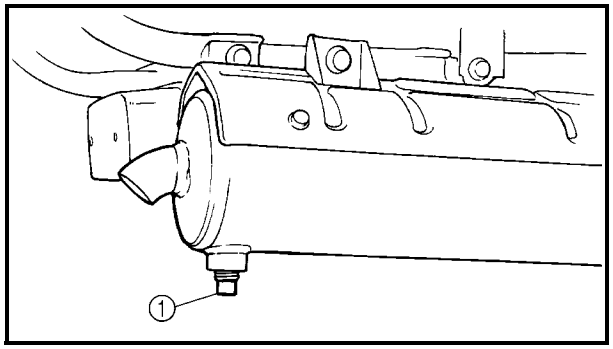


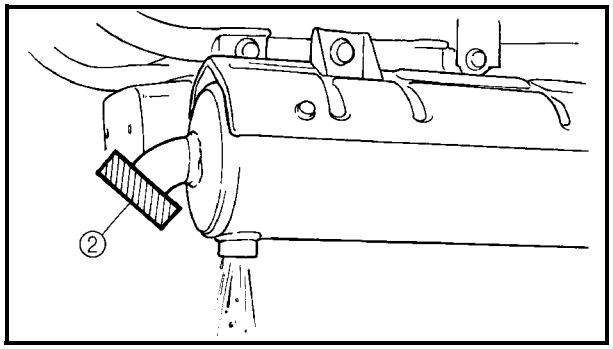


## CLEANING THE SPARK ARRESTER

1. Clean:
   - spark arrester

▼▼▼▼▼▼▼▼▼▼▼▼▼▼▼▼▼▼▼▼▼▼▼▼▼▼▼▼▼▼▼▼▼▼▼▼▼▼

**⚠ WARNING**

- **Select a well-ventilated area free of combustible materials.**
- **Always let the exhaust system cool before performing this operation.**

a. Remove the bolt ①.
b. Start the engine and rev it up approximately twenty times while momentarily creating exhaust system back pressure by blocking the end of the muffler with a shop towel ②.
c. Stop the engine and allow the exhaust pipe to cool.
d. Install the bolt ① and tighten it.

| | |
|---|---|
| | **Bolt**<br>**11 Nm (1.1 m · kg, 8.0 ft · lb)** |

▲▲▲▲▲▲▲▲▲▲▲▲▲▲▲▲▲▲▲▲▲▲▲▲▲▲▲▲▲▲▲▲▲▲▲▲▲▲

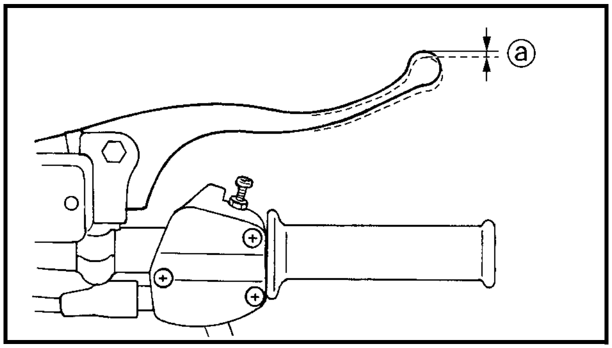


## CHASSIS

### ADJUSTING THE FRONT BRAKE

1. Check:
   - brake lever free play ⓐ
     Out of specification → Bleed the front brake system.
     Refer to "BLEEDING THE HYDRAULIC BRAKE SYSTEM".

**Front brake lever free play (at the end of the brake lever)**
**0 mm (0 in)**

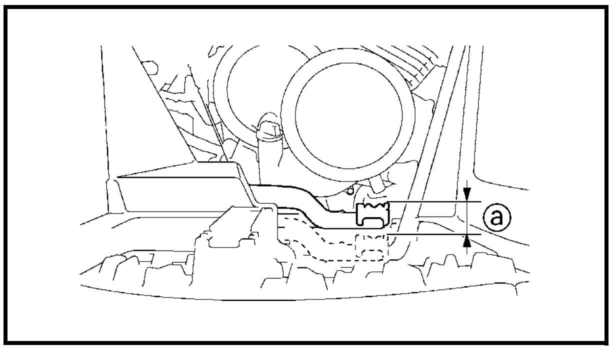


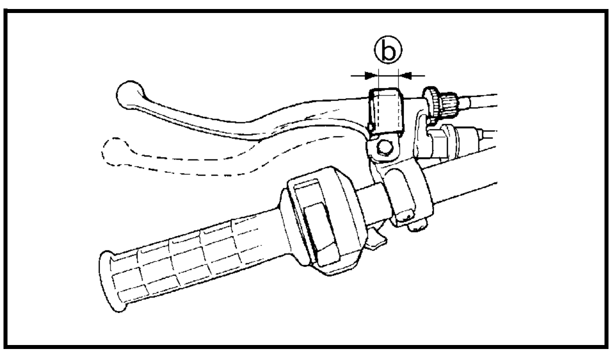


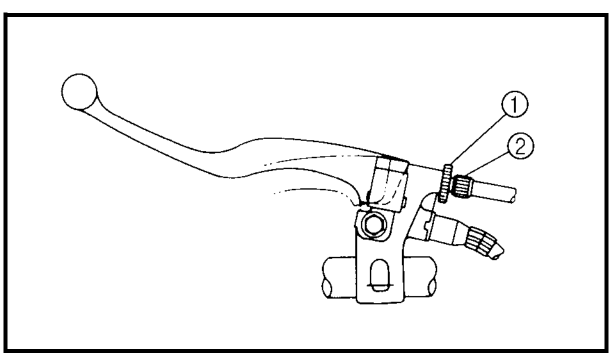


### ADJUSTING THE REAR BRAKE

**NOTE:**
When adjusting the rear brake, be sure to adjust both the brake pedal and the brake lever.

1. Check:
   - brake pedal free play ⓐ
   - rear brake lever free play ⓑ
     Out of specification → Adjust.

**Brake pedal free play ⓐ**
**16 ~ 20 mm (0.63 ~ 0.79 in)**
**Rear brake lever free play ⓑ**
**8.0 ~ 10.5 mm (0.31 ~ 0.41 in)**

2. Adjust:
   - rear brake lever free play
   - brake pedal free play

▼▼▼▼▼▼▼▼▼▼▼▼▼▼▼▼▼▼▼▼▼▼▼▼▼▼▼▼▼▼▼▼▼▼▼

a. Loosen the locknut (handlebar) ① and fully screw in the rear brake lever cable adjusting nut (handlebar) ②.

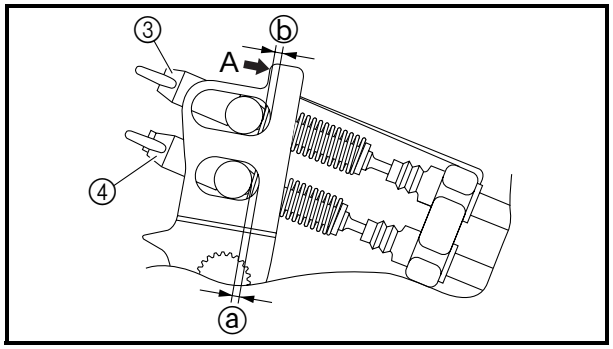


b. Fully loosen the brake lever cable adjusting nut (final gear case) ③.
c. Apply a force of 47 N (4.7 kg, 10.57 lb) in direction A until the brakes are engaged, then turn the brake pedal cable adjusting nut ④ until the gap ⓐ is within the specified limits.

**Gap ⓐ**
**3.0 mm (0.12 in)**

d. Checking the brake pedal free play to see whether or not it is within the specified limits. If not, perform the above steps again.

**Brake pedal free play**
**16 ~ 20 mm (0.63 ~ 0.79 in)**

e. Apply a force of 47 N (4.7 kg, 10.57 lb) in direction A until the brakes are engaged, then turn the brake lever cable adjusting nut (gear case) ③ clockwise until the gap ⓑ is within the specified limits.

**Gap ⓑ**
**4.0 ~ 6.0 mm (0.16 ~ 0.24 in)**

f. Checking the rear brake lever free play to see whether or not it is within the specified limits. If not, perform the above steps again and adjust the rear brake lever cable adjusting nut (handlebar) ② as necessary.

**Rear brake lever free play**
**8.0 ~ 10.5 mm (0.31 ~ 0.41 in)**

g. Tighten the locknut (handlebar) ①.

**WARNING**

**After this adjustment is performed, lift the front and rear wheels off the ground by placing a block under the engine, and spin the rear wheels to ensure there is no brake drag. If any brake drag is noticed perform the above steps again.**

### CHECKING THE BRAKE FLUID LEVEL

1. Place the vehicle on a level surface.

**NOTE:**

When checking the front brake fluid level, make sure that the top of the master cylinder top is horizontal.

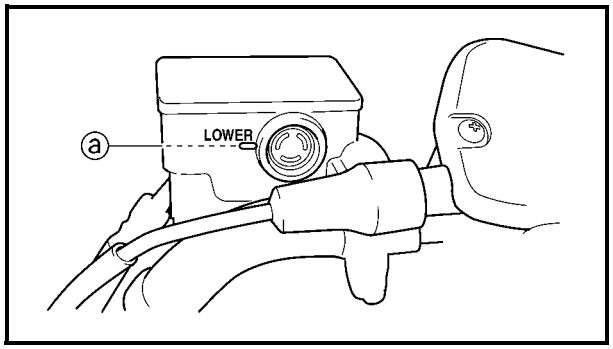


2. Check:
   - brake fluid level
     Below the minimum level mark ⓐ → Add the recommended brake fluid to the proper level.

| | |
|---|---|
| | **Recommended brake fluid**<br>**DOT 4** |

**CAUTION:**

**Brake fluid may erode painted surfaces or plastic parts. Always clean up spilled fluid immediately.**

**WARNING**

- **Use only the recommended brake fluid; otherwise, the rubber seals may deteriorate, causing leakage and poor brake performance.**
- **Refill with the same type of brake fluid; mixing fluids may result in a harmful chemical reaction and lead to poor performance.**
- **Be careful that water does not enter the master cylinder when refilling. Water will significantly lower the boiling point of the fluid and may result in a vapor lock.**

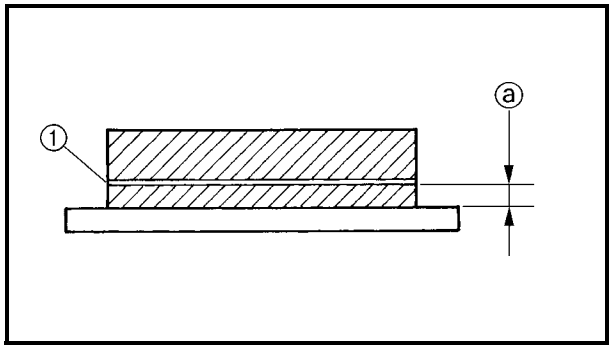


## CHECKING THE FRONT BRAKE PADS

1. Remove:
   - front wheel
2. Check:
   - brake pads
     Wear indicator groove ① almost touch the brake disc → Replace the brake pads as a set.
     Refer to “FRONT BRAKE” in chapter 7.

**Brake pad wear limit ⓐ**
**1 mm (0.04 in)**

3. Operate the brake lever.
4. Install:
   - front wheel

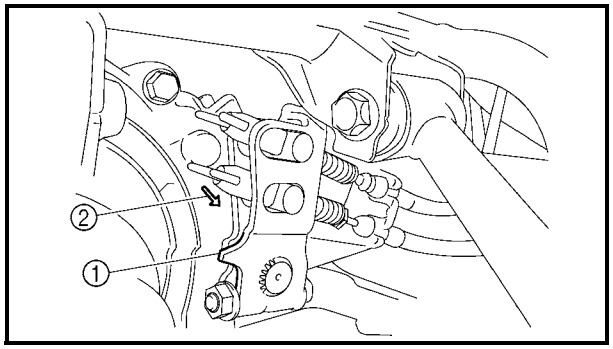


## CHECKING THE REAR BRAKE PLATES

1. Operate the rear brake lever or brake pedal.
2. Check:
   - wear indicator ①
     Reaches the wear limit point ② → Replace the brake plates as a set.
     Refer to “REAR BRAKE” in chapter 7.

## ADJUSTING THE REAR BRAKE LIGHT SWITCH

**NOTE:**

- The rear brake light switch is operated by movement of the brake pedal.
- The rear brake light switch is properly adjusted when the brake light comes on just before the braking effect starts.

1. Check:
   - rear brake light operation timing
     Incorrect → Adjust.

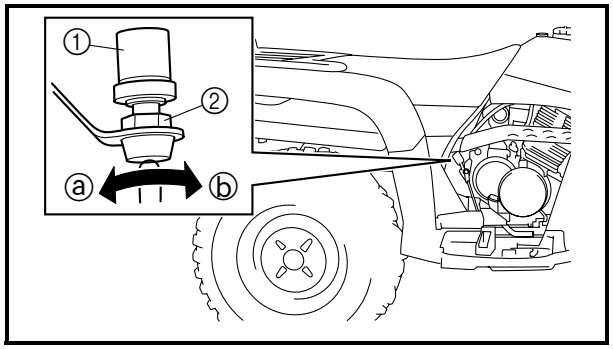


2. Adjust:
- rear brake light operation timing

▼▼▼▼▼▼▼▼▼▼▼▼▼▼▼▼▼▼▼▼▼▼▼▼▼▼▼▼▼▼▼▼▼▼

a. Hold the main body ① of the rear brake light switch so that it does not rotate and turn the adjusting nut ② in direction ⓐ or ⓑ until the rear brake light comes on at the proper time.

| | |
|---|---|
| **Direction ⓐ** | **Brake light comes on sooner.** |
| **Direction ⓑ** | **Brake light comes on later.** |

▲▲▲▲▲▲▲▲▲▲▲▲▲▲▲▲▲▲▲▲▲▲▲▲▲▲▲▲▲▲▲▲▲▲

**CHECKING THE BRAKE HOSES**

1. Remove:
- seat
- front fender

Refer to “SEAT, CARRIERS, FENDERS, FUEL TANK AND AIR FILTER”.

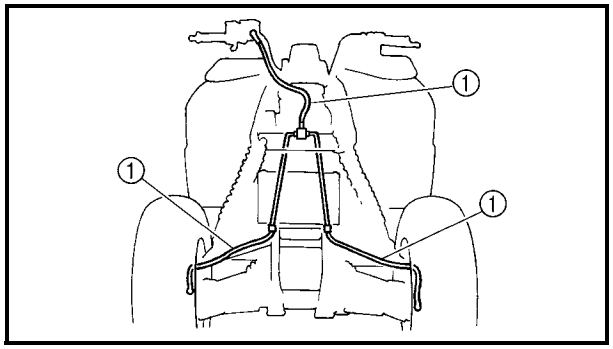


2. Check:

**NOTE:**
Hold the vehicle in an upright position and apply the parking brake.

- front brake hoses ①
  Cracks/wear/damage → Replace.
  Fluid leakage → Replace any damaged hose.
  Refer to “FRONT BRAKE” in chapter 7.

3. Check:
- brake hose clamps
  Loosen → Tighten.

4. Install:
- front fender
- seat

Refer to “SEAT, CARRIERS, FENDERS, FUEL TANK AND AIR FILTER”.

EBS00094

## BLEEDING THE HYDRAULIC BRAKE SYSTEM

**WARNING**

**Bleed the hydraulic brake system whenever:**
- **the system is disassembled,**
- **a brake hose is loosened, disconnected or replaced,**
- **the brake fluid level is very low,**
- **brake operation is faulty.**

**NOTE:**
- Be careful not to spill any brake fluid or allow the brake master cylinder reservoir to overflow.
- When bleeding the hydraulic brake system, make sure there is always enough brake fluid before applying the brake. Ignoring this precaution could allow air to enter the hydraulic brake system, considerably lengthening the bleeding procedure.
- If bleeding is difficult, it may be necessary to let the brake fluid settle for a few hours. Repeat the bleeding procedure when the tiny bubbles in the hose have disappeared.

1. Bleed:
   - hydraulic brake system

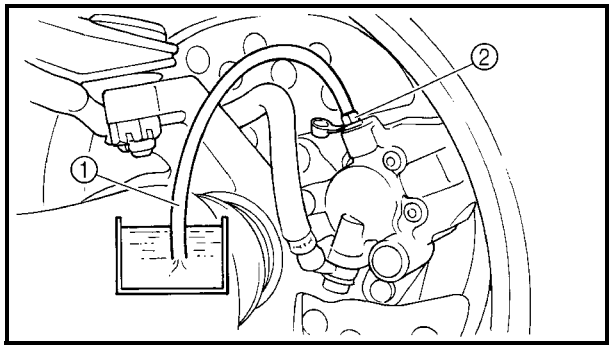


▼▼▼▼▼▼▼▼▼▼▼▼▼▼▼▼▼▼▼▼▼▼▼▼▼▼▼▼▼▼▼▼▼▼

a. Fill the brake fluid reservoir to the proper level with the recommended brake fluid.
b. Install the diaphragm (brake master cylinder reservoir).
c. Connect a clear plastic hose ① tightly to the bleed screw ②.
d. Place the other end of the hose into a container.
e. Slowly apply the brake lever several times.
f. Fully squeeze the brake lever and hold it in position.
g. Loosen the bleed screw.

**NOTE:**
Loosening the bleed screw will release the pressure and the brake lever will contact the throttle grip.

h. Tighten the bleed screw and then release the brake lever.
i. Repeat steps (e) to (h) until all of the air bubbles have disappeared from the brake fluid in the plastic hose.
j. Tighten the bleed screw to specification.

| | |
|---|---|
| 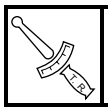 | **Bleed screw**<br>**5 Nm (0.5 m · kg, 3.6 ft · lb)** |

k. Fill the brake master cylinder reservoir to the proper level with the recommended brake fluid.
   Refer to “CHECKING THE BRAKE FLUID LEVEL”.

**WARNING**

**After bleeding the hydraulic brake system, check the brake operation.**

▲▲▲▲▲▲▲▲▲▲▲▲▲▲▲▲▲▲▲▲▲▲▲▲▲▲▲▲▲▲▲▲

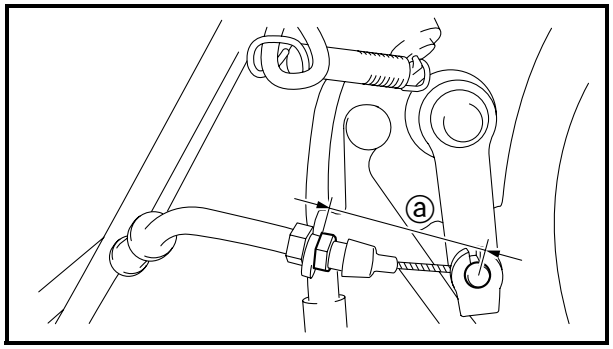


**REVERSE CONTROL CABLE ADJUSTMENT**

1. Check:
   - reverse control cable end length ⓐ
     Out of specification → Adjust.

| | |
|---|---|
| | **Cable end length**<br>**38 mm (1.5 in)** |

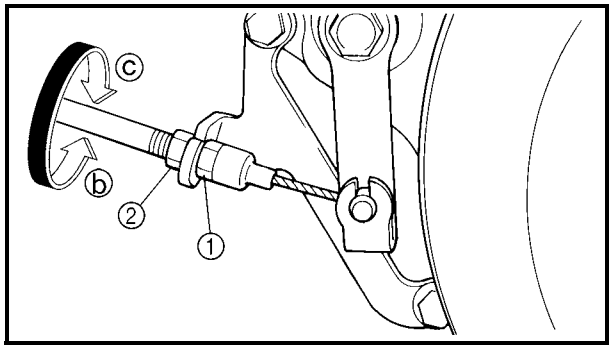


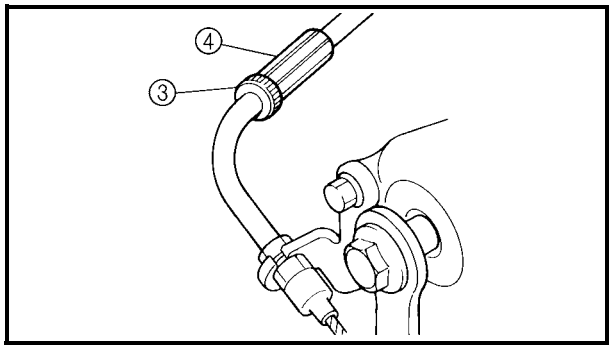


2. Adjust:
   - reverse control cable end length

▼▼▼▼▼▼▼▼▼▼▼▼▼▼▼▼▼▼▼▼▼▼▼▼▼▼▼▼▼▼▼▼▼▼

a. Loosen the locknut ①.
b. Turn the adjuster ② in direction ⓑ or ⓒ unit the specified cable end length is obtained.

| | |
|---|---|
| **Direction ⓑ** | **Cable end length is decreased.** |
| **Direction ⓒ** | **Cable end length is increased.** |

c. Tighten the locknut.
d. Check the reverse control cable slack.
   If the reverse control cable is slack, adjust it using the locknut ③ and the adjuster ④.

▲▲▲▲▲▲▲▲▲▲▲▲▲▲▲▲▲▲▲▲▲▲▲▲▲▲▲▲▲▲▲▲▲▲

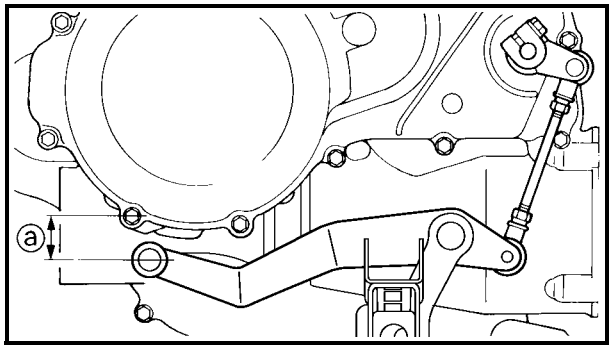


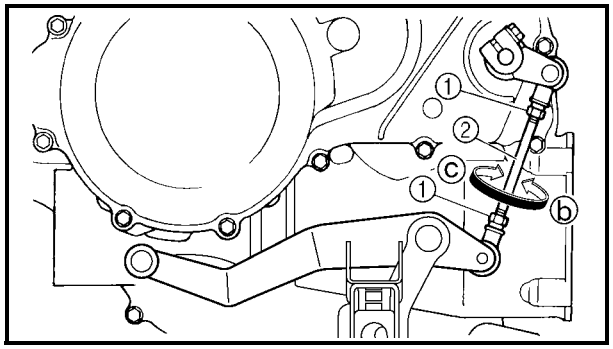


**ADJUSTING THE SHIFT PEDAL**

1. Check:
   - shift pedal height ⓐ
     Out of specification → Adjust.

| | |
|---|---|
| | **Shift pedal height 26 mm (1.02 in)** |

2. Adjust:
   - shift pedal position

▼▼▼▼▼▼▼▼▼▼▼▼▼▼▼▼▼▼▼▼▼▼▼▼▼▼▼▼▼▼▼▼▼▼

a. Remove the shift rod cover.
b. Loosen the locknut ①.
c. Turn the shift pedal rod ② in direction ⓑ or ⓒ to set the correct pedal height.

| | |
|---|---|
| **Direction ⓑ** | **Pedal is lowered.** |
| **Direction ⓒ** | **Pedal is raised.** |

d. Tighten both locknuts.
e. Install the shift rod cover.

▲▲▲▲▲▲▲▲▲▲▲▲▲▲▲▲▲▲▲▲▲▲▲▲▲▲▲▲▲▲▲▲▲▲

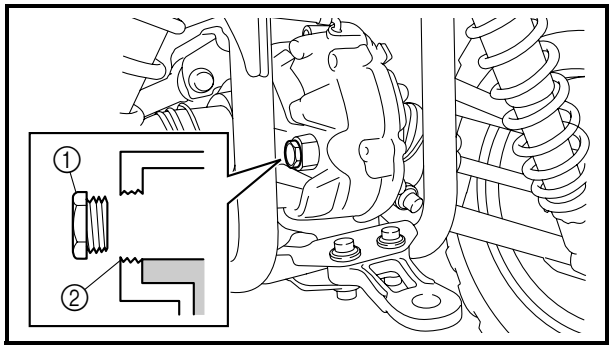


**CHECKING THE FINAL GEAR OIL LEVEL**

1. Place the vehicle on a level surface.
2. Remove:
   - oil filler plug ①
3. Check:
   - oil level
     Oil level should be up to the brim ② of the hole.
     Oil level low → Add oil to the proper level.

**Recommended oil**
**Yamaha Friction Modified Shaft Drive Gear Oil**
**(Part No.: ACC-SHAFT-LU-00)**

**CAUTION:**

**Take care not allow foreign material to enter the final gear case.**

4. Install:
   - oil filler plug **23 Nm (2.3 m · kg, 17 ft · lb)**

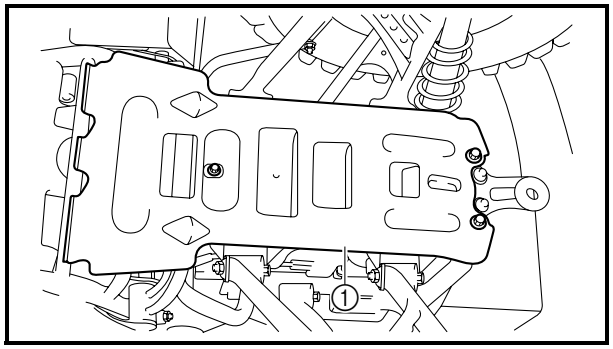


**CHANGING THE FINAL GEAR OIL**

1. Place the vehicle on a level surface.
2. Remove:
   - rear skid plate ①
3. Place a receptacle under the final gear case.

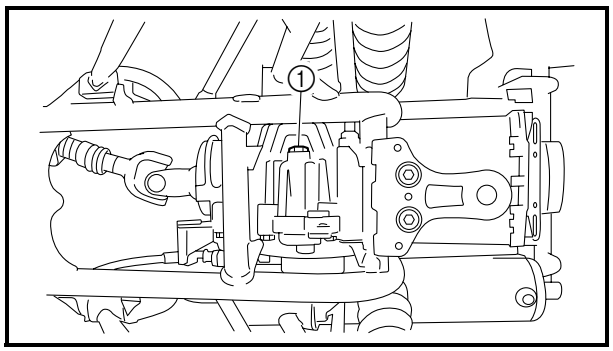


4. Remove:
   - oil filler bolt
   - drain plug ①
5. Drain:
   - final gear oil

6. Install:
   - drain plug — 23 Nm (2.3 m · kg, 17 ft · lb)

**NOTE:**
Check the gasket (drain plug). If it is damaged, replace it with a new one.

7. Fill:
   - final gear case

**Periodic oil change**
**0.50 L (0.44 Imp qt, 0.53 US qt)**
**Total amount**
**0.53 L (0.47 Imp qt, 0.56 US qt)**
**Recommended oil**
**Yamaha Friction Modified Shaft Drive Gear Oil**
**(Part No.: ACC-SHAFT-LU-00)**

**NOTE:**
If the recommended oil is not available, SAE 80W-90 API GL-5 Hypoid gear oil may be used instead. However, when using this oil, noise from the final gear case may occur when applying the rear brake.

**CAUTION:**
**Take care not to allow foreign material to enter the final gear case.**

8. Check:
   - oil level
     Refer to “CHECKING THE FINAL GEAR OIL LEVEL”.
9. Install:
   - oil filler bolt
   - rear skid plate — 7 Nm (0.7 m · kg, 5.1 ft · lb)
     Refer to “INSTALLING THE REAR SKID PLATE”.

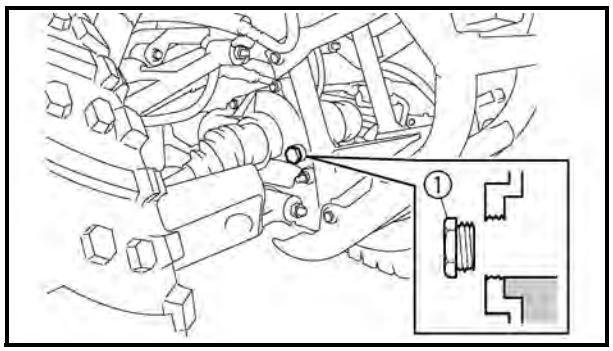


**CHECKING THE DIFFERENTIAL GEAR OIL**
1. Place the vehicle on a level surface.
2. Remove:
   - oil filler bolt ①

3. Check:
   - oil level
     Oil level should be up to the brim of hole.
     Oil level low → Add oil to proper level.

**Recommended oil**
**Yamaha Friction Modified Shaft Drive Gear Oil**
**(Part No.: ACC-SHAFT-LU-00) or**
**SAE 80 API GL-4 Hypoid gear oil**
**Oil quantity (periodic oil change)**
**0.23 L (0.20 Imp qt, 0.24 US qt)**

**CAUTION:**

**Take care not allow foreign material to enter the differential gear case.**

4. Install:
   - oil filler bolt — **23 Nm (2.3 m · kg, 17 ft · lb)**

**CHANGING THE DIFFERENTIAL GEAR OIL**

1. Place the vehicle on a level surface.
2. Place a receptacle under the differential gear case.

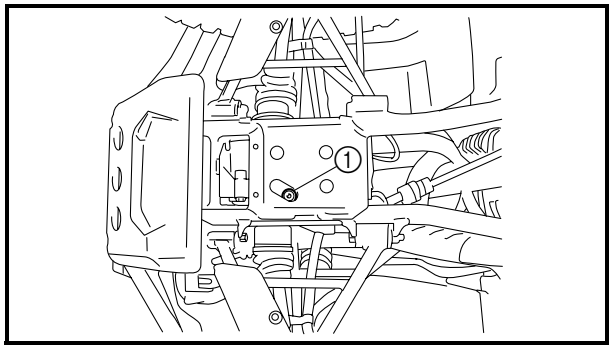


3. Remove:
   - oil filler bolt
   - drain plug ①
4. Drain:
   - differential gear oil
5. Install:
   - drain plug — **10 Nm (1.0 m · kg, 7.2 ft · lb)**

**NOTE:**

Check the gasket (drain plug). If it is damaged, replace it with new one.

6. Fill:
   - differential gear case

**Periodic oil change**
**0.23 L (0.20 Imp qt, 0.24 US qt)**
**Total amount**
**0.25 L (0.22 Imp qt, 0.26 US qt)**
**Recommended oil**
**Yamaha Friction Modified Shaft Drive Gear Oil**
**(Part No.: ACC-SHAFT-LU-00) or**
**SAE 80 API GL-4 Hypoid gear oil**

**CAUTION:**

**Take care not to allow foreign material to enter the differential gear case.**

7. Install:
   - oil filler bolt — **23 Nm (2.3 m · kg, 17 ft · lb)**

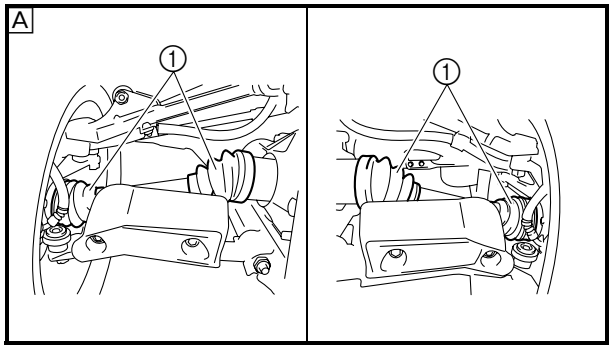


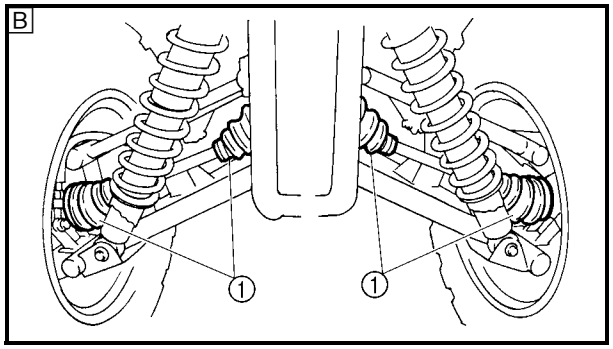


## CHECKING THE CONSTANT VELOCITY JOINT DUST BOOTS

1. Check:
   - dust boots ①
     Damage → Replace.
     Refer to “FRONT CONSTANT VELOCITY JOINTS AND DIFFERENTIAL GEAR” and “REAR CONSTANT VELOCITY JOINTS AND FINAL DRIVE GEAR” in chapter 6.

A Front
B Rear

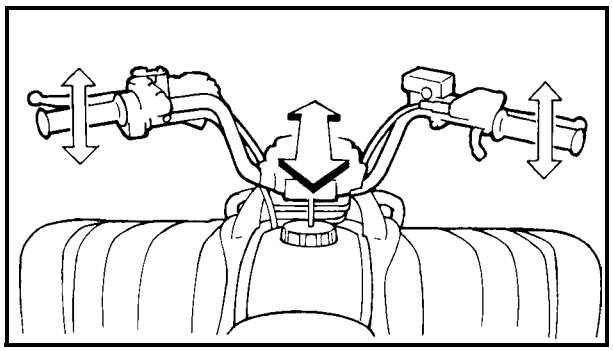

## CHECKING THE STEERING SYSTEM

1. Place the vehicle on a level surface.
2. Check:
   - steering assembly bushings
     Move the handlebar up and down, and/or back and forth.
     Excessive play → Replace the steering shaft bushings.

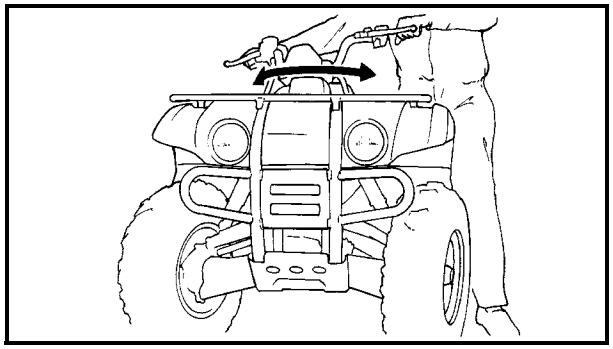

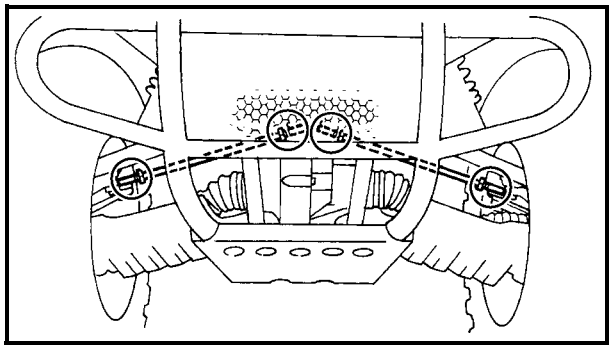

3. Check:
   - tie-rod ends
     Turn the handlebar to the left and/or right until it stops completely, then move the handlebar from the left to the right slightly.
     Tie-rod end has any vertical play → Replace the tie-rod end(s).

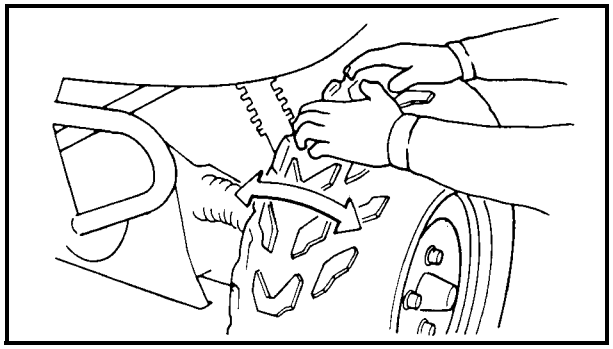

4. Raise the front end of the vehicle so that there is no weight on the front wheels.
5. Check:
   - ball joints and/or wheel bearings
     Move the wheels laterally back and forth. Excessive free play → Replace the front arms (upper and lower) and/or wheel bearings.

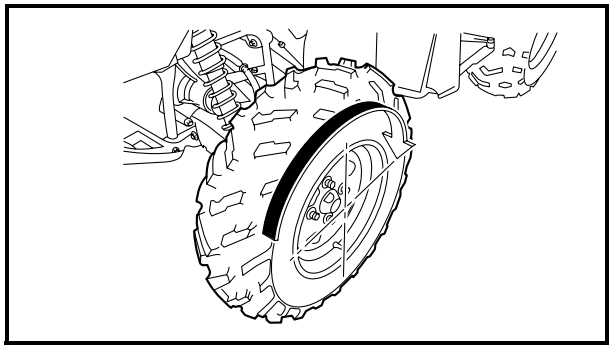

EBS00108

**ADJUSTING THE TOE-IN**

1. Place the vehicle on a level surface.
2. Measure:
   - toe-in
     Out of specification → Adjust.

| | |
|---|---|
| | **Toe-in**<br>**0 ~ 10 mm (0 ~ 0.39 in)** |

▼▼▼▼▼▼▼▼▼▼▼▼▼▼▼▼▼▼▼▼▼▼▼▼▼▼▼▼▼▼▼▼▼▼

**NOTE:**

Before measuring the toe-in, make sure that the tire pressure is correct.

a. Mark both front tire tread centers.
b. Raise the front end of the vehicle so that there is no weight on the front tires.
c. Face the handlebar straight ahead.

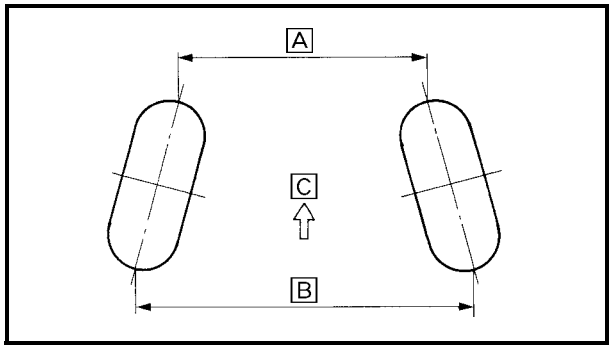


d. Measure the width A between the marks.
e. Rotate the front tires 180° until the marks are exactly opposite one another.
f. Measure the width B between the marks.
g. Calculate the toe-in using the formula given below.

**Toe-in = B – A**

h. If the toe-in is incorrect, adjust it.
C Forward

▲▲▲▲▲▲▲▲▲▲▲▲▲▲▲▲▲▲▲▲▲▲▲▲▲▲▲▲▲▲▲▲

3. Adjust:
   - toe-in

**WARNING**

- **Be sure that both tie-rods are turned the same amount. If not, the vehicle will drift right or left even though the handlebar is positioned straight. This may lead to mishandling and an accident.**
- **After setting the toe-in to specification, run the vehicle slowly for some distance with both hands lightly holding the handlebar and check that the handlebar responds correctly. If not, turn either the right or left tie-rod within the toe-in specification.**

▼▼▼▼▼▼▼▼▼▼▼▼▼▼▼▼▼▼▼▼▼▼▼▼▼▼▼▼▼▼▼▼

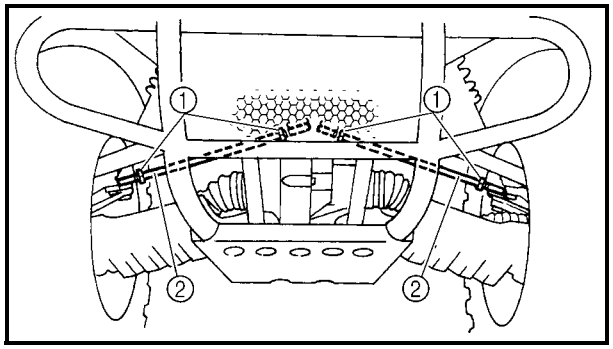


a. Mark both tie-rods ends.
   This reference point will be needed during adjustment.
b. Loosen the locknuts (tie-rod end) ① of both tie-rods.
c. The same number of turns should be given to both the right and left tie-rods ② until the specified toe-in is obtained. This is to keep the length of the rods the same.
d. Tighten the rod end locknuts of both tie-rods.

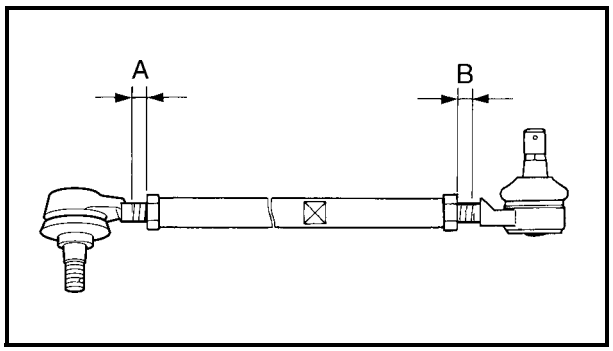


| | |
|---|---|
| | **Locknut (rod end)**<br>**30 Nm (3.0 m · kg, 22 ft · lb)** |

**NOTE:**
Adjust the rod ends so that A and B are equal.

▲▲▲▲▲▲▲▲▲▲▲▲▲▲▲▲▲▲▲▲▲▲▲▲▲▲▲▲▲▲▲▲

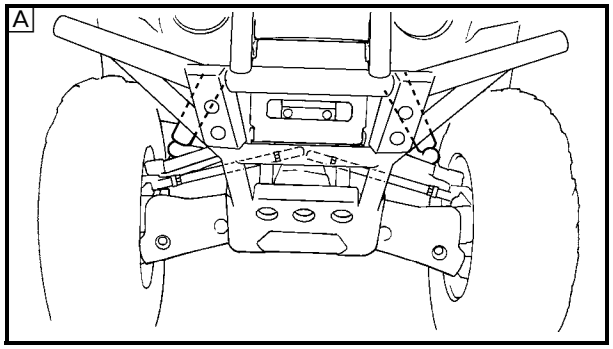


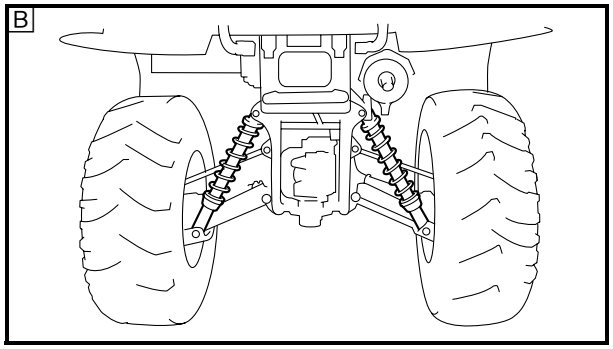


EBS00109

## CHECKING THE FRONT AND REAR SHOCK ABSORBERS

1. Place the vehicle on a level surface.
2. Check:
   - damper rod
     Bends/damage → Replace the front/rear shock absorber assembly.
   - oil leakage
     Excessive oil leakage → Replace the front/rear shock absorber assembly.
   - spring
     Fatigue → Replace the front/rear shock absorber assembly.
     Refer to “FRONT ARMS AND FRONT SHOCK ABSORBERS” and “REAR ARMS AND REAR SHOCK ABSORBERS” in chapter 7.
3. Check:
   - operation
     Pump the shock absorbers up and down for several times.
     Unsmooth operation → Replace the front/rear shock absorber assembly.
     Refer to “ADJUSTING THE FRONT SHOCK ABSORBER” and “ADJUSTING THE REAR SHOCK ABSORBERS”.

A Front shock absorber
B Rear shock absorber

## ADJUSTING THE FRONT SHOCK ABSORBER

**WARNING**

**Always adjust the spring preload for both front shock absorbers to the same setting. Uneven adjustment can cause poor handling and loss of stability.**

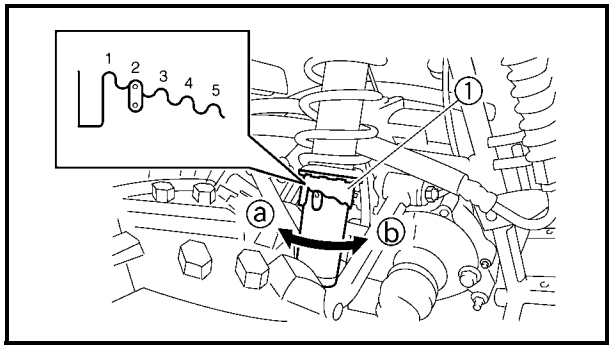


1. Adjust:
   - spring preload
     Turn the adjuster ① in direction ⓐ or ⓑ.

| | |
|---|---|
| **Direction ⓐ** | **Spring preload is increased (suspension is harder).** |
| **Direction ⓑ** | **Spring preload is decreased (suspension is softer).** |

**Standard position: 2**
**Minimum position: 1**
**Maximum position: 5**

### ADJUSTING THE REAR SHOCK ABSORBERS

**WARNING**

**Always adjust the spring preload for both shock absorbers to the same setting. Uneven adjustment can cause poor handling and loss of stability.**

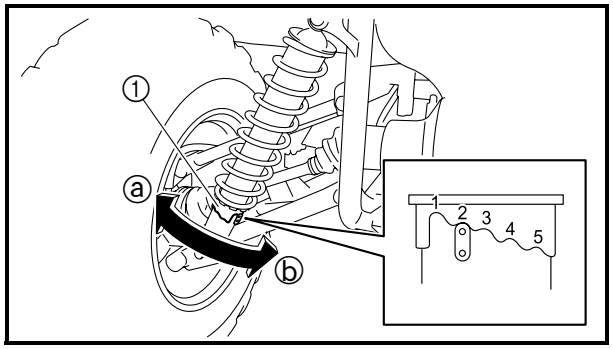


1. Adjust:
   - spring preload
     Turn the adjuster ① to increase or decrease the spring preload.

| | |
|---|---|
| **Direction ⓐ** | **Spring preload is increased (suspension is harder).** |
| **Direction ⓑ** | **Spring preload is decreased (suspension is softer).** |

**Standard position: 2**
**Minimum position: 1**
**Maximum position: 5**

## CHECKING THE TIRES

**WARNING**

**This model is equipped with low pressure tires. It is important that they be inflated correctly and maintained at the proper pressures.**

- **TIRE CHARACTERISTICS**

1) **Tire characteristics influence the handling of ATVs. The tires listed below have been approved by Yamaha Motor Co., Ltd. for this model. If other tire combinations are used, they can adversely affect your vehicle's handling characteristics and are therefore not recommended.**

| | Manufacturer | Size | Type |
|---|---|---|---|
| Front | ITP | AT25 × 8-12 | MUDLIGHT |
| Rear | ITP | AT25 × 10-12 | MUDLIGHT |

- **TIRE PRESSURE**

1) **Recommended tire pressure**
   **Front 25 kPa (0.25 kg/cm$^2$, 3.6 psi)**
   **Rear 25 kPa (0.25 kg/cm$^2$, 3.6 psi)**
2) **Tire pressure below the minimum specified could cause the tire to dislodge from the rim under severe riding conditions.**
   **The following are minimums:**
   **Front 22 kPa (0.22 kg/cm$^2$, 3.2 psi)**
   **Rear 22 kPa (0.22 kg/cm$^2$, 3.2 psi)**
3) **Use no more than**
   **Front 250 kPa (2.5 kg/cm$^2$, 36 psi)**
   **Rear 250 kPa (2.5 kg/cm$^2$, 36 psi)**
   **when seating the tire beads. Higher pressures may cause the tire to burst.**
   **Inflate the tires very slowly and carefully. Fast inflation could cause the tire to burst.**

- **MAXIMUM LOADING LIMIT**

**1) Vehicle load limits: 210 kg (463 lb)***
*** Total weight of cargo, trailer hitch vertical load, rider, and accessories.**
**2) Front carrier: 40 kg (88 lb)**
**3) Rear carrier: 80 kg (176 lb)**
**4) Storage compartment: 2.0 kg (4 lb)**
**5) Trailer hitch:**
**Pulling load (total weight of trailer and cargo): 4,900 N (500 kg, 1,102 lb)**
**Tongue weight (vertical weight on trailer hitch point): 147 N (15 kg, 33 lb)**
**Be extra careful of the vehicle balance and stability when towing a trailer.**

1. Measure:
   - tire pressure (cold tire pressure)
     Out of specification → Adjust.

**NOTE:**
- The low-pressure tire gauge ① is included in the standard equipment.
- If dust or the like is stuck to this gauge, it does not provide correct readings. Therefore, make two measurements on the tire pressure and get the second reading.

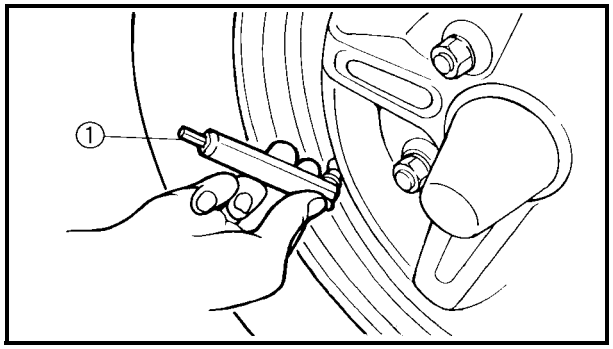


| Cold tire pressure | Front | Rear |
|---|---|---|
| Standard | 25 kPa (0.25 kg/cm², 3.6 psi) | 25 kPa (0.25 kg/cm², 3.6 psi) |
| Minimum | 22 kPa (0.22 kg/cm², 3.2 psi) | 22 kPa (0.22 kg/cm², 3.2 psi) |
| Maximum | 28 kPa (0.28 kg/cm², 4.0 psi) | 28 kPa (0.28 kg/cm², 4.0 psi) |

**WARNING**

**Uneven or improper tire pressure may adversely affect the handling of this vehicle and may cause loss of control.**
- **Maintain proper tire pressures.**
- **Set tire pressures when the tires are cold.**
- **Tire pressures must be equal in both front tires and equal in both rear tires.**

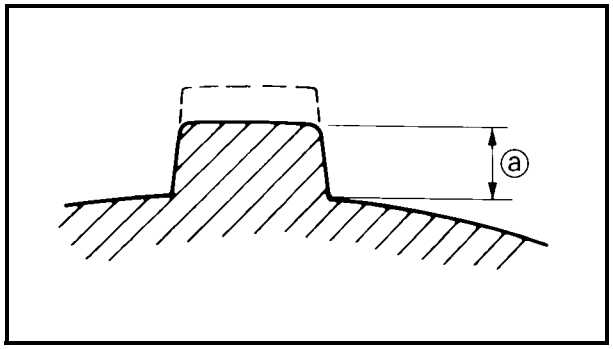


2. Check:
   - tire surfaces
     Wear/damage → Replace.

**Tire wear limit ⓐ**
**Front and rear: 3.0 mm (0.12 in)**

**WARNING**

**It is dangerous to ride with a worn-out tire. When tire wear is out of specification, replace the tire immediately.**

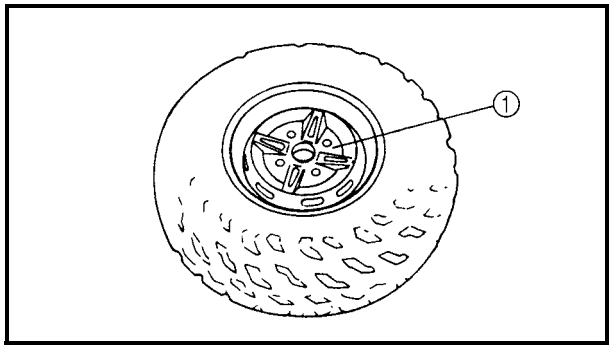


**CHECKING THE WHEELS**

1. Check:
   - wheels ①
     Damage/bends → Replace.

**NOTE:**
Always balance the wheel when a tire or wheel has been changed or replaced.

**WARNING**

- **Never attempt even small repairs to the wheel.**
- **Ride conservatively after installing a tire to allow it to seat itself properly on the rim.**

**CHECKING AND LUBRICATING THE CABLES**

**WARNING**

**A damaged cable sheath may cause corrosion and interfere with the cable movement. An unsafe condition may result, so replace a damaged cable as soon as possible.**

1. Check:
   - cable sheath
     Damage → Replace.
2. Check:
   - cable operation
     Unsmooth operation → Lubricate or replace.

| | |
|---|---|
| | **Recommended lubricant**<br>**Yamaha chain and cable lube or engine oil** |

**NOTE:**
Hold the cable end up and apply several drops of lubricant to the cable.

3. Apply:
   - lithium-soap-based grease
     (onto end of the cable)

EBS00118

## LUBRICATING THE LEVERS AND PEDALS

Lubricate the pivoting point and metal-to-metal moving parts of the levers and pedals.

| | |
|---|---|
| | **Recommended lubricant**<br>**Lithium-soap-based grease** |

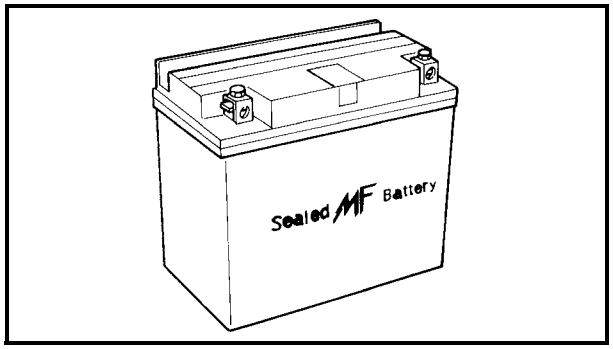


EBS00120

# ELECTRICAL SYSTEM

## CHECKING AND CHARGING THE BATTERY

**WARNING**

**Batteries generate explosive hydrogen gas and contain electrolyte which is made of poisonous and highly caustic sulfuric acid. Therefore, always follow these preventive measures:**

- **Wear protective eye gear when handling or working near batteries.**
- **Charge batteries in a well-ventilated area.**
- **Keep batteries away from fire, sparks or open flames (e.g., welding equipment, lighted cigarettes).**
- **DO NOT SMOKE when charging or handling batteries.**
- **KEEP BATTERIES AND ELECTROLYTE OUT OF REACH OF CHILDREN.**
- **Avoid bodily contact with electrolyte as it can cause severe burns or permanent eye injury.**

**FIRST AID IN CASE OF BODILY CONTACT:**
**EXTERNAL**

- **Skin — Wash with water.**
- **Eyes — Flush with water for 15 minutes and get immediate medical attention.**

**INTERNAL**

- **Drink large quantities of water or milk followed with milk of magnesia, beaten egg or vegetable oil. Get immediate medical attention.**

**CAUTION:**

- **This is a sealed battery. Never remove the sealing caps because the balance between cells will not be maintained and battery performance will deteriorate.**
- **Charging time, charging amperage and charging voltage for an MF battery are different from those of conventional batteries. The MF battery should be charged as explained in the charging method illustrations. If the battery is overcharged, the electrolyte level will drop considerably. Therefore, take special care when charging the battery.**

**NOTE:**

Since MF batteries are sealed, it is not possible to check the charge state of the battery by measuring the specific gravity of the electrolyte. Therefore, the charge of the battery has to be checked by measuring the voltage at the battery terminals.

1. Remove:
   - seat
   - battery holding bracket
     Refer to "SEAT, CARRIERS, FENDERS, FUEL TANK AND AIR FILTER".

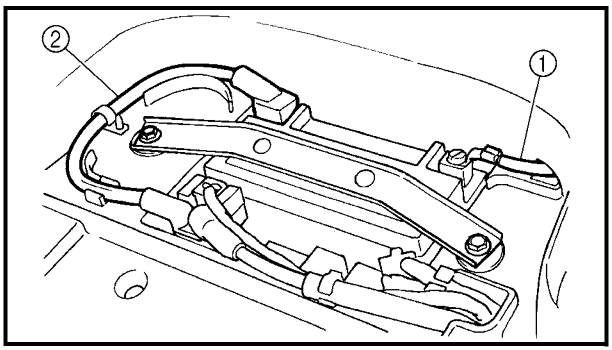


2. Disconnect:
   - battery leads
     (from the battery terminals)

**CAUTION:**

**First, disconnect the negative battery lead ①, and then the positive battery lead ②.**

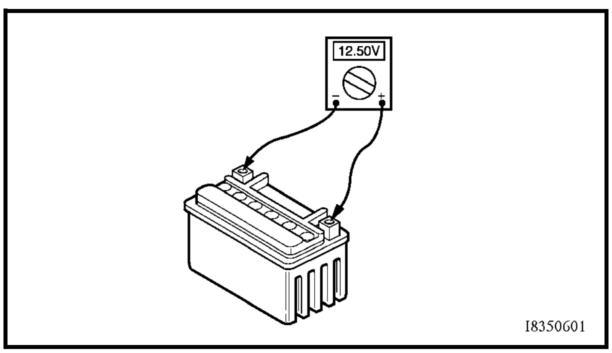


3. Remove:
   - battery
4. Check:
   - battery charge

▼▼▼▼▼▼▼▼▼▼▼▼▼▼▼▼▼▼▼▼▼▼▼▼▼▼▼▼▼▼▼▼▼▼▼

a. Connect a pocket tester to the battery terminals.

| |
|---|
| **Positive tester probe →** **positive battery terminal** |
| **Negative tester probe →** **negative battery terminal** |

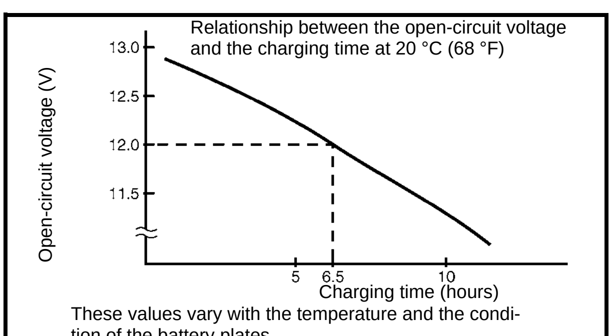


**NOTE:**

- The charge state of an MF battery can be checked by measuring its open-circuit voltage (i.e., the voltage when the positive terminal is disconnected).
- No charging is necessary when the open-circuit voltage equals or exceeds 12.8 V.

b. Check the charge of the battery, as shown in the charts and the following example.

**Example**

c. Open-circuit voltage = 12.0 V
d. Charging time = 6.5 hours
e. Charge of the battery = 20 ~ 30%

▲▲▲▲▲▲▲▲▲▲▲▲▲▲▲▲▲▲▲▲▲▲▲▲▲▲▲▲▲▲▲▲

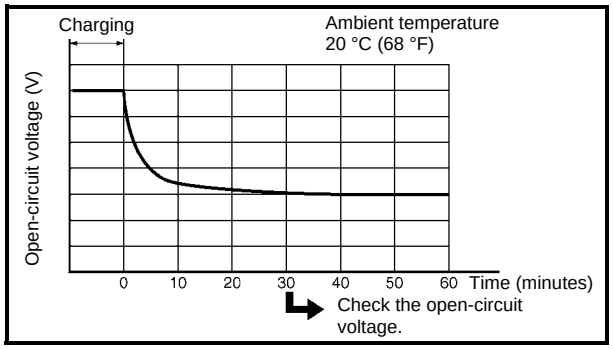


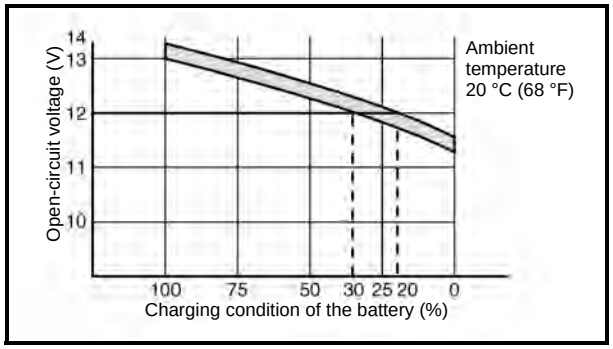


5. Charge:
   - battery
     (refer to the appropriate charging method illustration)

**WARNING**

**Do not quick charge a battery.**

**CAUTION:**

- **Never remove the MF battery sealing caps.**
- **Do not use a high-rate battery charger since it forces a high-amperage current into the battery quickly and can cause battery overheating and battery plate damage.**
- **If it is impossible to regulate the charging current on the battery charger, be careful not to overcharge the battery.**
- **When charging a battery, be sure to remove it from the vehicle. (If charging has to be done with the battery mounted on the vehicle, disconnect the negative battery lead from the battery terminal.)**
- **To reduce the chance of sparks, do not plug in the battery charger until the battery charger leads are connected to the battery.**
- **Before removing the battery charger lead clips from the battery terminals, be sure to turn off the battery charger.**
- **Make sure the battery charger lead clips are in full contact with the battery terminal and that they are not shorted. A corroded battery charger lead clip may generate heat in the contact area and a weak clip spring may cause sparks.**

- **If the battery becomes hot to the touch at any time during the charging process, disconnect the battery charger and let the battery cool before reconnecting it. Hot batteries can explode!**
- **As shown in the following illustration, the open-circuit voltage of an MF battery stabilizes about 30 minutes after charging has been completed. Therefore, wait 30 minutes after charging is completed before measuring the open-circuit voltage.**

### Charging method using a variable-current (voltage) charger

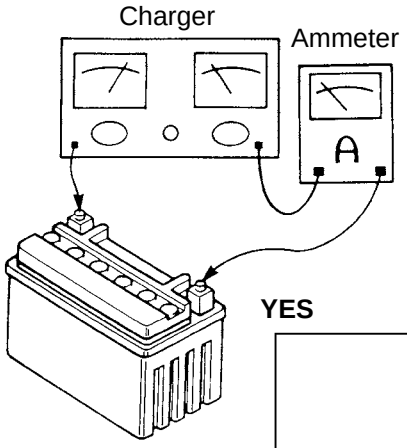


Measure the open-circuit voltage prior to charging.

**NOTE:**
Leave the battery unused for more than 30 minutes before measuring its open-circuit voltage.

Connect a charger and ammeter to the battery and start charging.

**NOTE:**
Set the charging voltage to 16 ~ 17 V. (If the charging voltage is lower, charging will be insufficient, if it is higher, the battery will be over-charged.)

Is the amperage higher than the standard charging amperage written on the battery?

**YES** → Adjust the voltage to obtain the standard charging amperage.

**NO** → Adjust the charging voltage to 20 ~ 25 V.

Monitor the amperage for 3 ~ 5 minutes. Is the standard charging amperage exceeded?

**YES** → Adjust the voltage to obtain the standard charging amperage.

**NO** → If the amperage does not exceed the standard charging amperage after 5 minutes, replace the battery.

Set the timer to the charging time determined by the open-circuit voltage.
Refer to “CHECKING AND CHARGING THE BATTERY”.

If the required charging time exceeds 5 hours, it is advisable to check the charging amperage after 5 hours. If there is any change in the amperage, readjust the voltage to obtain the standard charging amperage.

Leave the battery unused for more than 30 minutes before measuring its open-circuit voltage.
12.8 V → Charging is complete.
12.0 ~ 12.7 V → Recharging is required.
Under 12.0 V → Replace the battery.

### Charging method using a constant voltage charger

Measure the open-circuit voltage prior to charging.

**NOTE:**
Leave the battery unused for more than 30 minutes before measuring its open-circuit voltage.

↓

Connect a charger and ammeter to the battery and start charging.

↓

Is the amperage higher than the standard charging amperage written on the battery?

**YES** →

Charge the battery until the charging voltage reaches 15 V.

**NOTE:**
Set the charging time to a maximum of 20 hours.

↓

Leave the battery unused for more than 30 minutes before measuring its open-circuit voltage.
12.8 V → Charging is complete.
12.0 ~ 12.7 V → Recharging is required.
Under 12.0 V → Replace the battery.

**CAUTION:**
**Constant amperage chargers are not suitable for charging MF batteries.**

**NO** →

This type of battery charger cannot charge an MF battery. A variable-voltage charger is recommended.

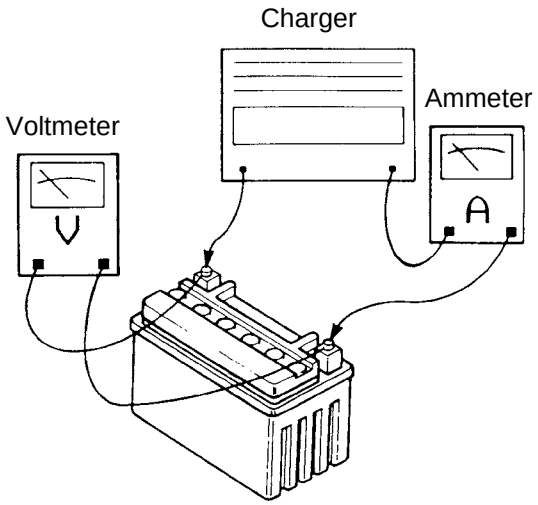

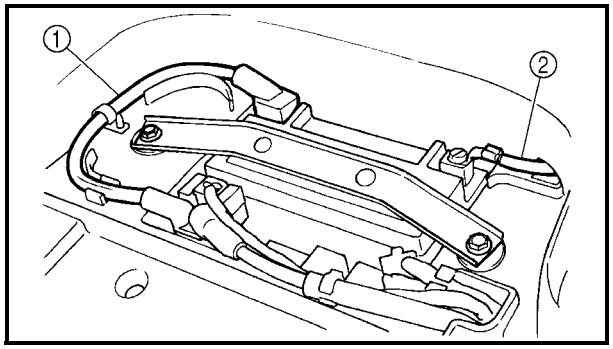


6. Install:
   - battery
7. Connect:
   - battery leads
     (to the battery terminals)

**CAUTION:**

**First, connect the positive battery lead ①, and then the negative battery lead ②.**

8. Check:
   - battery terminals
     Dirt → Clean with a wire brush.
     Loose connection → Connect properly.
9. Lubricate:
   - battery terminals

| | |
|---|---|
| | **Recommended lubricant**<br>**Dielectric grease** |

10. Install:
    - battery holding bracket
    - seat
      Refer to “SEAT, CARRIERS, FENDERS, FUEL TANK AND AIR FILTER”.

EBS00121

## CHECKING THE FUSES

The following procedure applies to all of the fuses.

**CAUTION:**

**To avoid a short circuit, always set the main switch to “OFF” when checking or replacing a fuse.**

1. Remove:
   - seat
     Refer to “SEAT, CARRIERS, FENDERS, FUEL TANK AND AIR FILTER”.

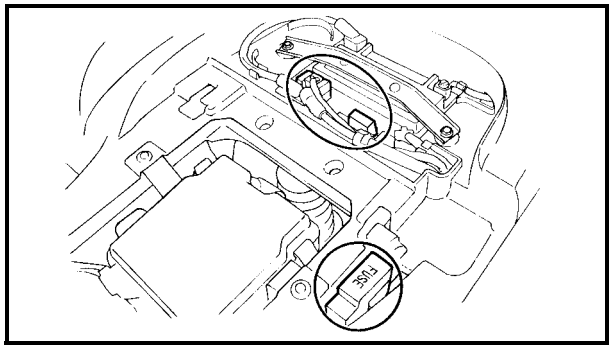


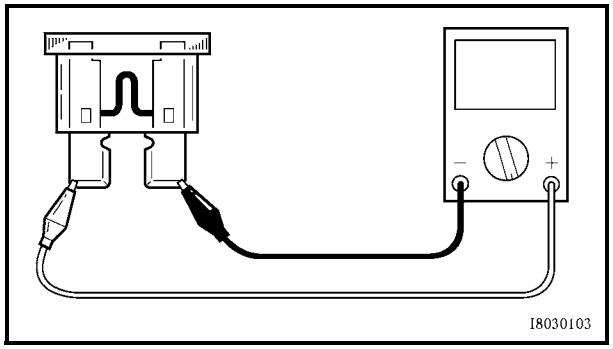


2. Check:
   - fuse

▼▼▼▼▼▼▼▼▼▼▼▼▼▼▼▼▼▼▼▼▼▼▼▼▼▼▼▼▼▼▼▼▼▼

a. Connect the pocket tester to the fuse and check the continuity.

**NOTE:**
Set the pocket tester selector to "Ω × 1".

**Pocket tester**
**90890-03112**
**Analog pocket tester**
**YU-03112-C**

b. If the pocket tester indicates "∞", replace the fuse.

▲▲▲▲▲▲▲▲▲▲▲▲▲▲▲▲▲▲▲▲▲▲▲▲▲▲▲▲▲▲▲▲▲▲

3. Replace:
   - blown fuse

▼▼▼▼▼▼▼▼▼▼▼▼▼▼▼▼▼▼▼▼▼▼▼▼▼▼▼▼▼▼▼▼▼▼

a. Set the main switch to "OFF".
b. Install a new fuse of the correct amperage.
c. Set on the switches to verify if the electrical circuit is operational.
d. If the fuse immediately blows again, check the electrical circuit.

| Items | Amperage rating | Q'ty |
|---|---|---|
| **Main fuse** | **30 A** | **1** |
| **Headlight fuse** | **15 A** | **1** |
| **Ignition fuse** | **15 A** | **1** |
| **Auxiliary DC jack fuse** | **10 A** | **1** |
| **Carburetor warmer fuse** | **10 A** | **1** |
| **Four-wheel-drive motor fuse** | **10 A** | **1** |
| **Spare fuse** | **30 A**<br>**15 A**<br>**10 A** | **1**<br>**1**<br>**2** |

▲▲▲▲▲▲▲▲▲▲▲▲▲▲▲▲▲▲▲▲▲▲▲▲▲▲▲▲▲▲▲▲▲▲

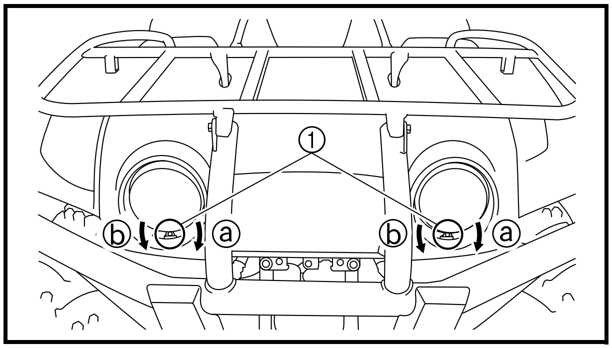


## ADJUSTING THE HEADLIGHT BEAMS

1. Adjust:
   - headlight beam (vertically)

▼▼▼▼▼▼▼▼▼▼▼▼▼▼▼▼▼▼▼▼▼▼▼▼▼▼▼▼▼▼▼▼▼▼▼

a. Turn the adjusting bolt ① in direction ⓐ or ⓑ.

| | |
|---|---|
| **Direction ⓐ** | **Headlight beam is raised.** |
| **Direction ⓑ** | **Headlight beam is lowered.** |

▲▲▲▲▲▲▲▲▲▲▲▲▲▲▲▲▲▲▲▲▲▲▲▲▲▲▲▲▲▲▲▲▲▲▲

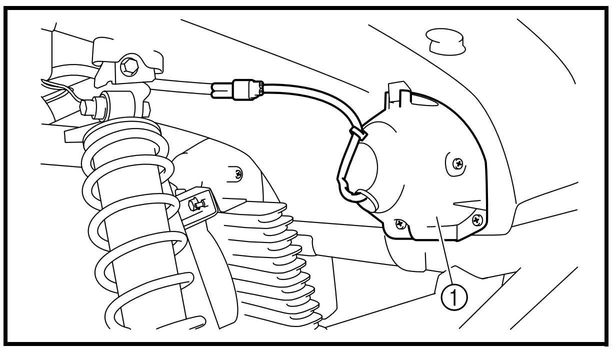


## REPLACING A HEADLIGHT BULB

1. Disconnect:
   - headlight coupler
2. Remove:
   - headlight assembly ①

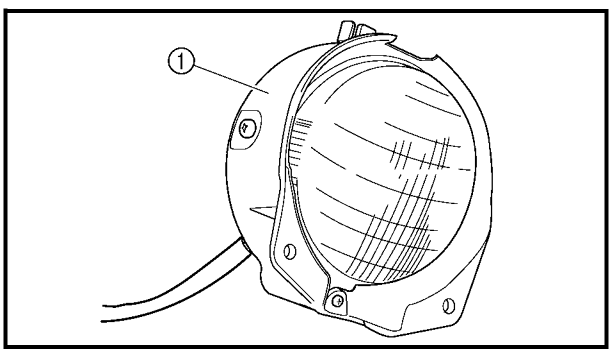


3. Remove:
   - headlight cover ①

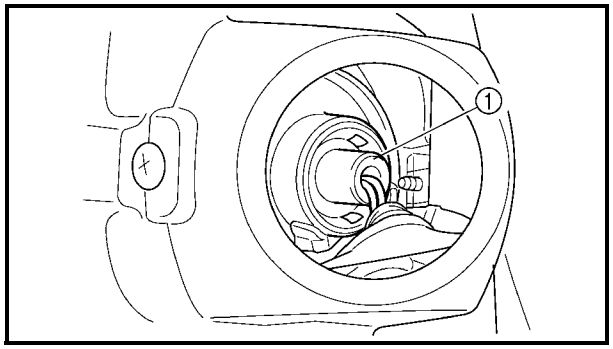


4. Remove:
   - headlight bulb holder ①

**NOTE:**
Turn the headlight bulb holder counterclockwise and remove the defective bulb.

**WARNING**

**Keep flammable products and your hands away from the bulb while it is on, since it will be hot. Do not touch the bulb until it cools down.**

5. Install:
   - bulb New
     Secure the new bulb with the headlight unit.

**CAUTION:**

**Avoid touching the glass part of the bulb. Keep it free from oil; otherwise, the transparency of the glass, life of the bulb, and luminous flux will be adversely affected. If oil gets on the bulb, thoroughly clean it with a cloth moistened with alcohol or lacquer thinner.**

6. Install:
   - bulb holder
   - cover
   - headlight cover
   - headlight assembly
7. Connect:
   - headlight coupler

EBS00198

# ENGINE

## ENGINE REMOVAL

### MUFFLER AND EXHAUST PIPE

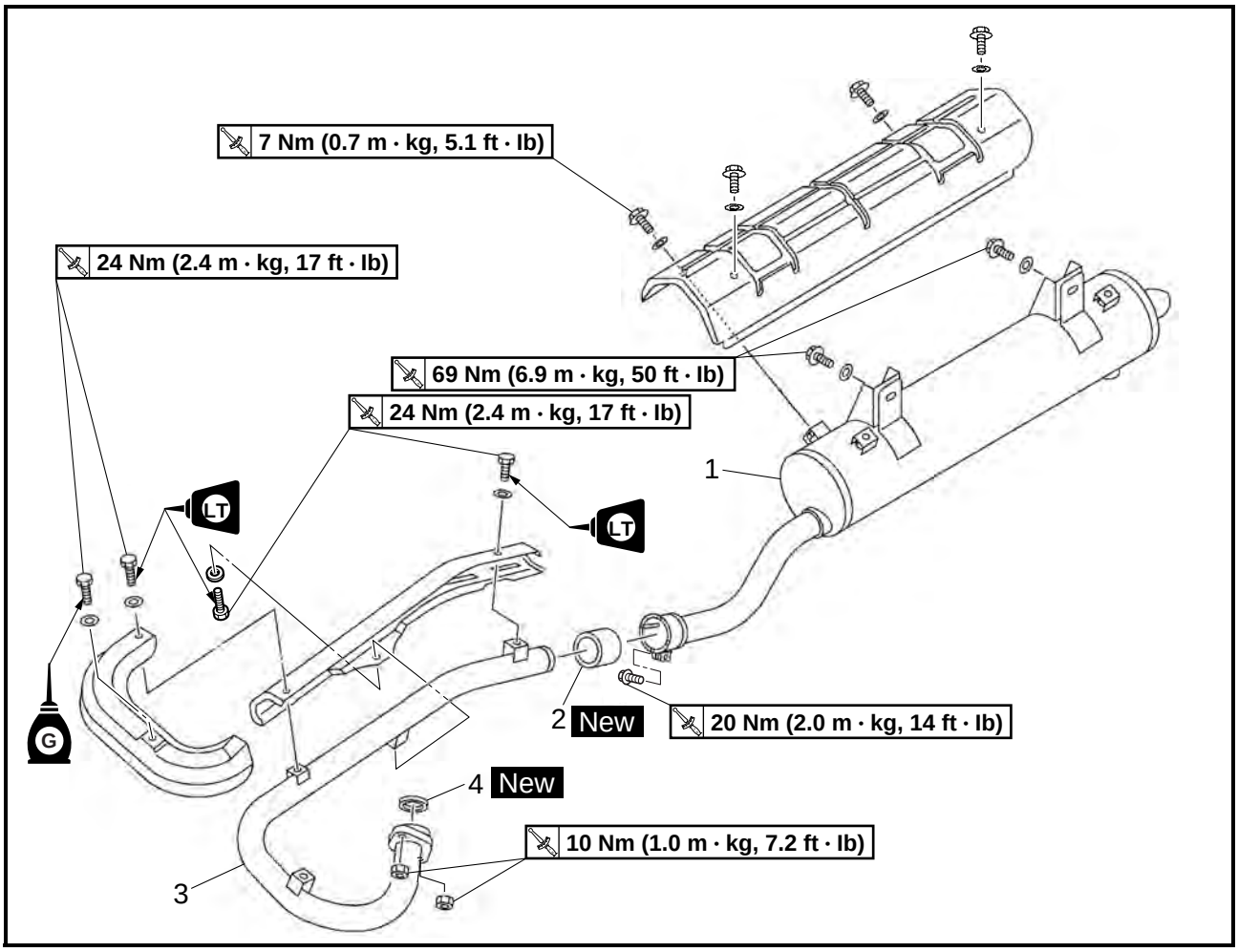


| Order | Job/Part | Q'ty | Remarks |
|---|---|---|---|
| | **Removing the muffler and exhaust pipe** | | Remove the parts in the order listed. |
| | Seat/front fender/rear fender | | Refer to "SEAT, CARRIERS, FENDERS, FUEL TANK AND AIR FILTER" in chapter 3. |
| | Right footrest board | | Refer to "FOOTREST BOARDS" in chapter 3. |
| 1 | Muffler | 1 | |
| 2 | Gasket | 1 | |
| 3 | Exhaust pipe | 1 | |
| 4 | Gasket | 1 | |
| | | | For installation, reverse the removal procedure. |

## LEADS, CABLES AND HOSES

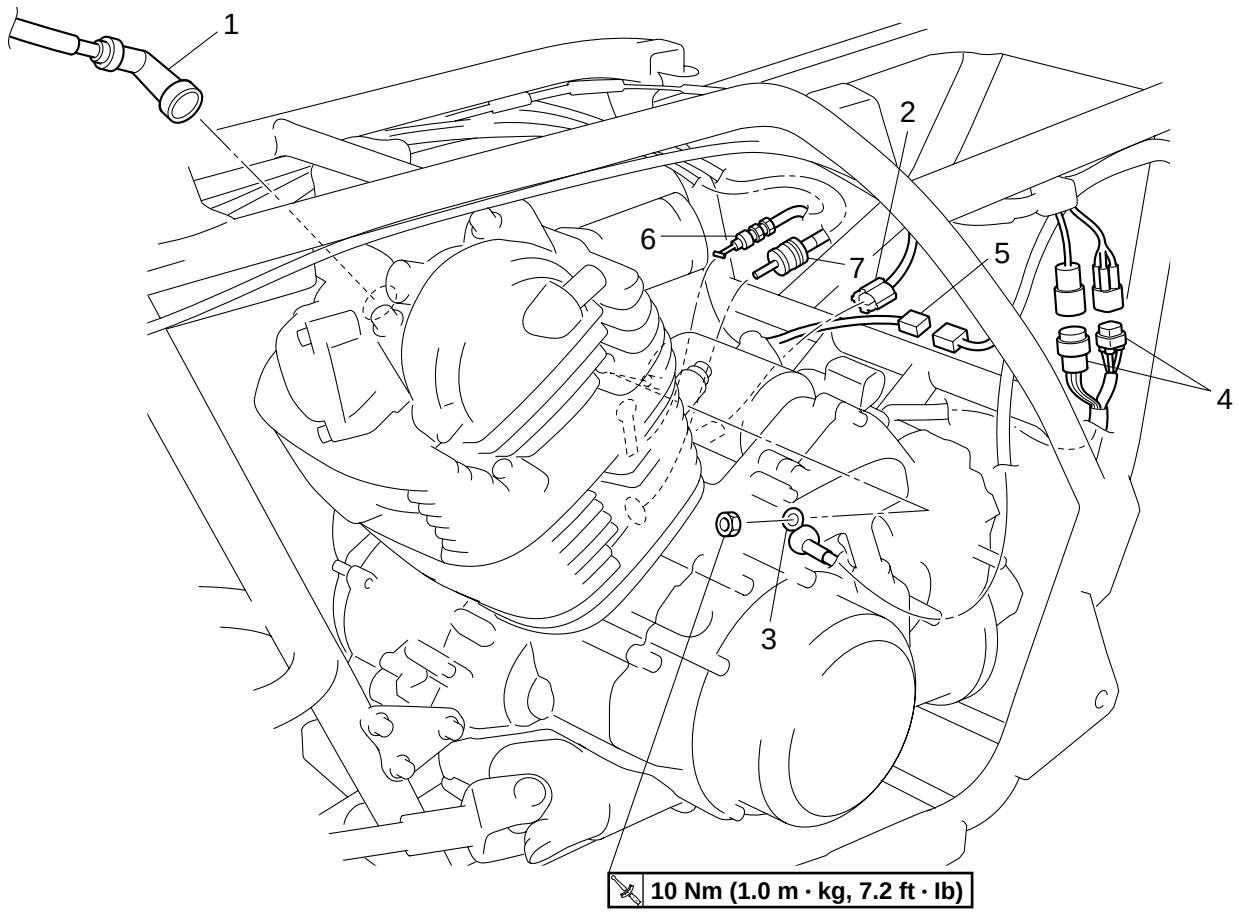


| Order | Job/Part | Q'ty | Remarks |
|---|---|---|---|
| | **Removing the leads, cables and hoses** | | Remove the parts in the order listed. |
| | Footrest board | | Refer to "FOOTREST BOARDS" in chapter 3. |
| | Air filter case<br>Fuel tank | | Refer to "SEAT, CARRIERS, FENDERS, FUEL TANK AND AIR FILTER" in chapter 3. |
| | Carburetor | | Refer to "CARBURETOR" in chapter 5. |
| | Oil cooler inlet hose<br>Oil cooler outlet hose | | Refer to "OIL COOLER". |
| | Final gear case assembly | | Refer to "REAR CONSTANT VELOCITY JOINTS AND FINAL DRIVE GEAR" in chapter 6. |
| 1 | Spark plug lead | 1 | Disconnect. |
| 2 | Oil temperature sensor coupler | 1 | Disconnect. |

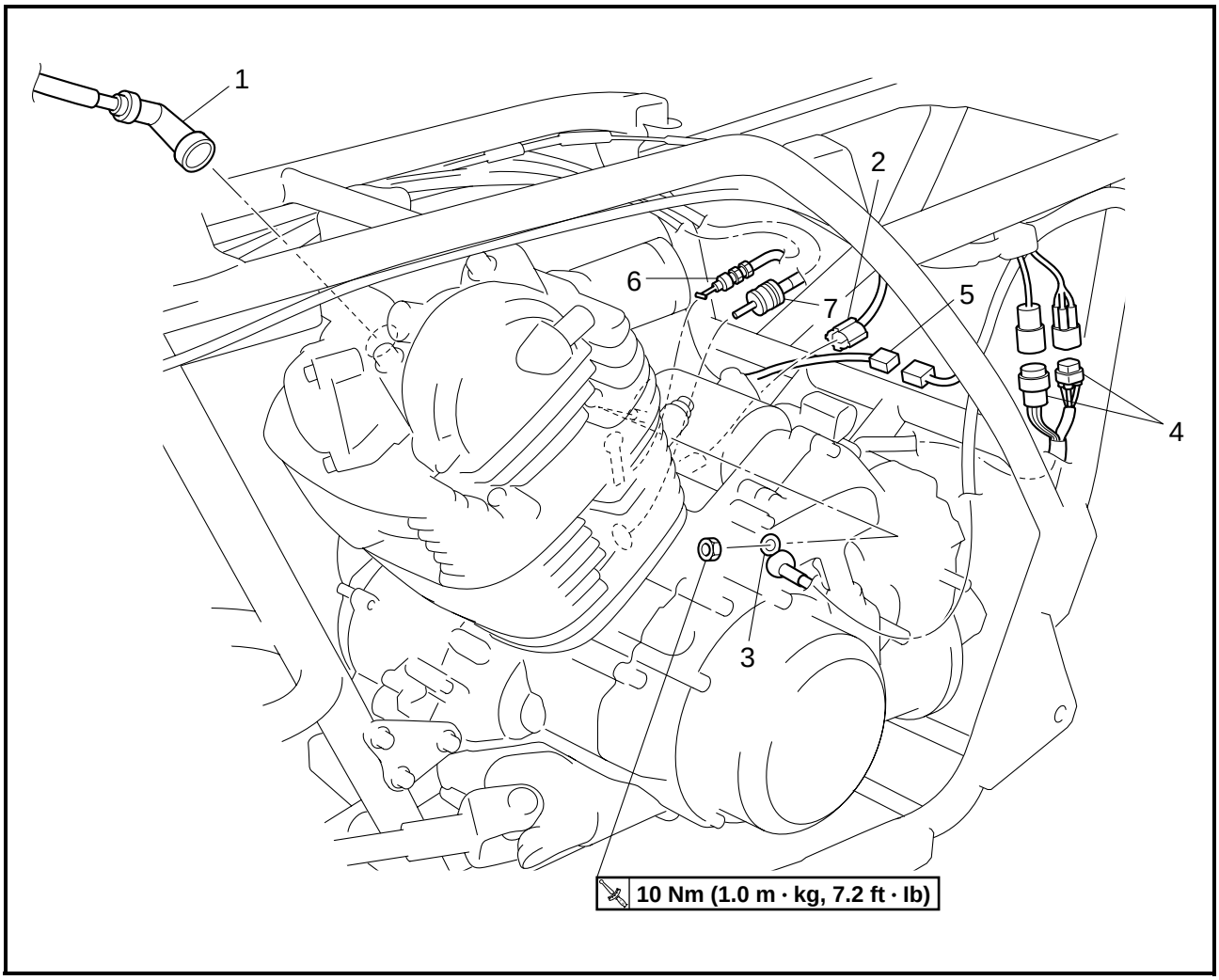


| Order | Job/Part | Q'ty | Remarks |
|---|---|---|---|
| 3 | Starter motor lead | 1 | Disconnect. |
| 4 | AC magneto coupler | 2 | Disconnect. |
| 5 | Gear position switch lead | 1 | Disconnect. |
| 6 | Reverse control cable | 1 | Disconnect. |
| 7 | Speedometer cable | 1 | Disconnect. |
| | | | For installation, reverse the removal procedure. |

## ENGINE MOUNTING BOLTS

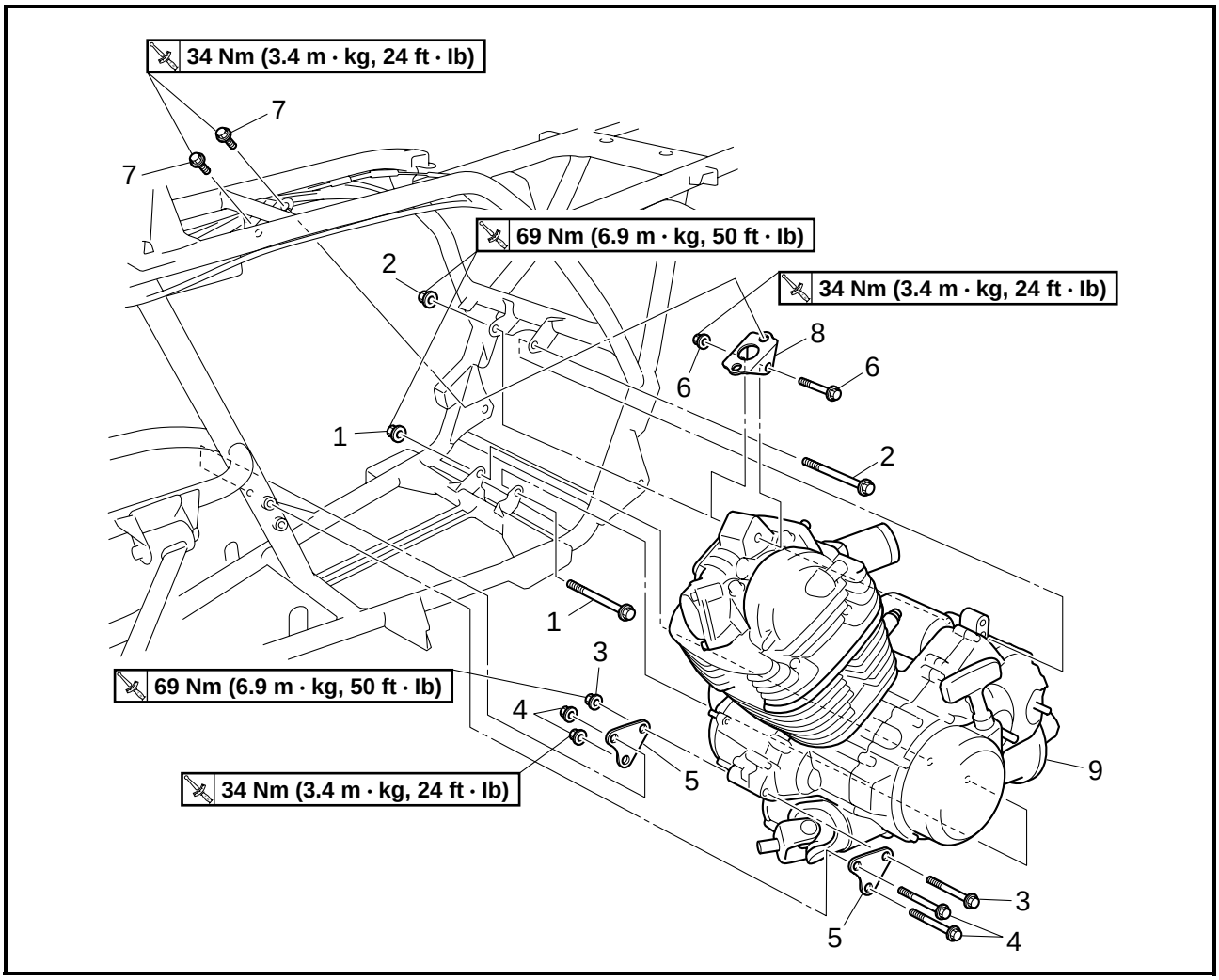


| Order | Job/Part | Q'ty | Remarks |
|---|---|---|---|
| | **Removing the engine mounting bolts** | | Remove the parts in the order listed. |
| 1 | Engine mounting bolt (rear-lower)/nut | 1/1 | Refer to "INSTALLING THE ENGINE". **CAUTION: Install all of the bolts/nuts and then tighten them to full torque specifications.** |
| 2 | Engine mounting bolt (rear-upper)/nut | 1/1 | |
| 3 | Engine mounting bolt (front-lower)/nut | 1/1 | |
| 4 | Engine bracket bolt (front-lower)/nut | 2/2 | |
| 5 | Engine bracket (front-lower) | 2 | |
| 6 | Engine mounting bolt (front-upper)/nut | 1/1 | |
| 7 | Engine bracket bolt (front-upper) | 2 | |
| 8 | Engine bracket (front-upper) | 1 | |

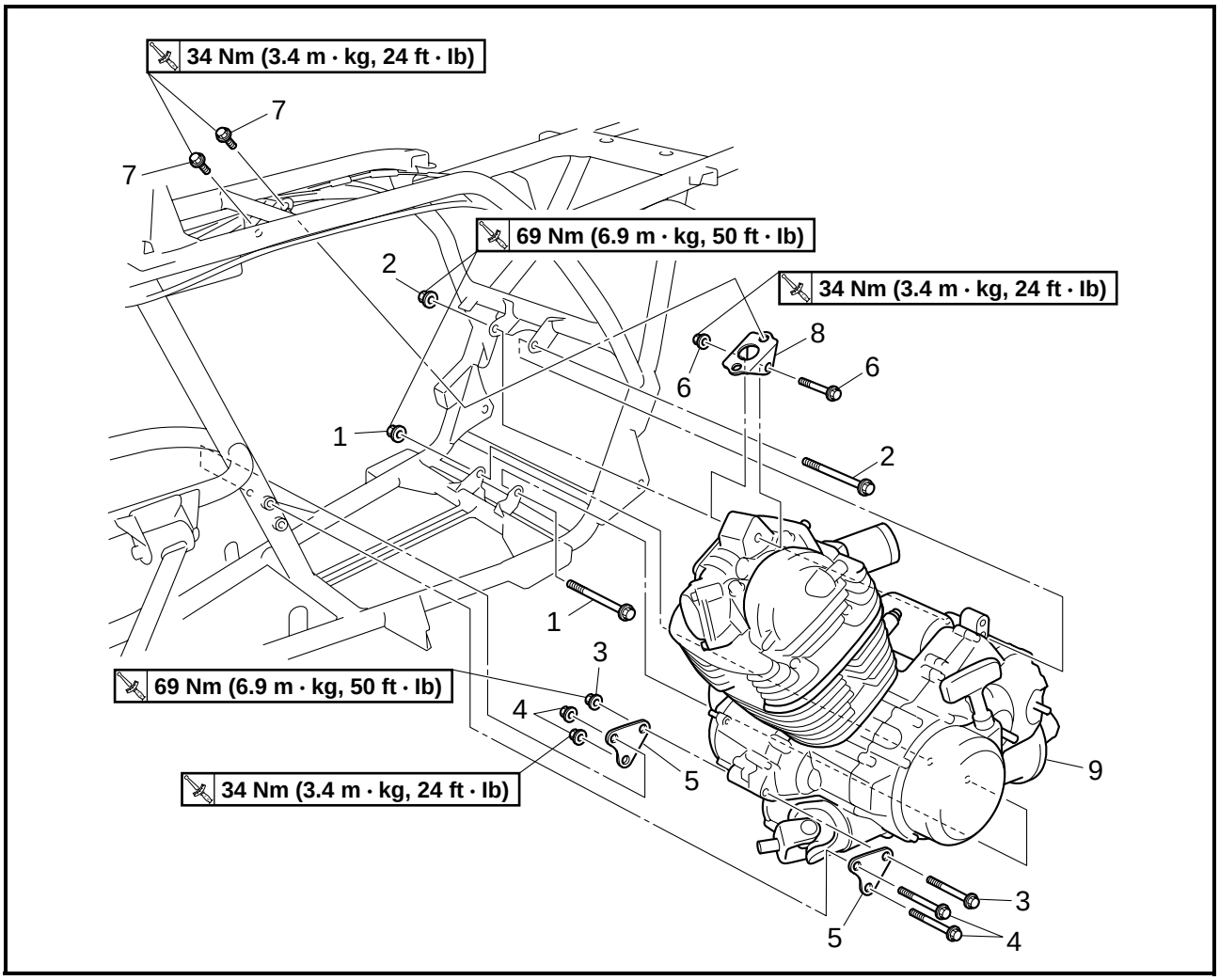


| Order | Job/Part | Q'ty | Remarks |
|---|---|---|---|
| 9 | Engine assembly | 1 | **NOTE:**<br>Remove the engine assembly from the left side of the vehicle.<br>For installation, reverse the removal procedure. |

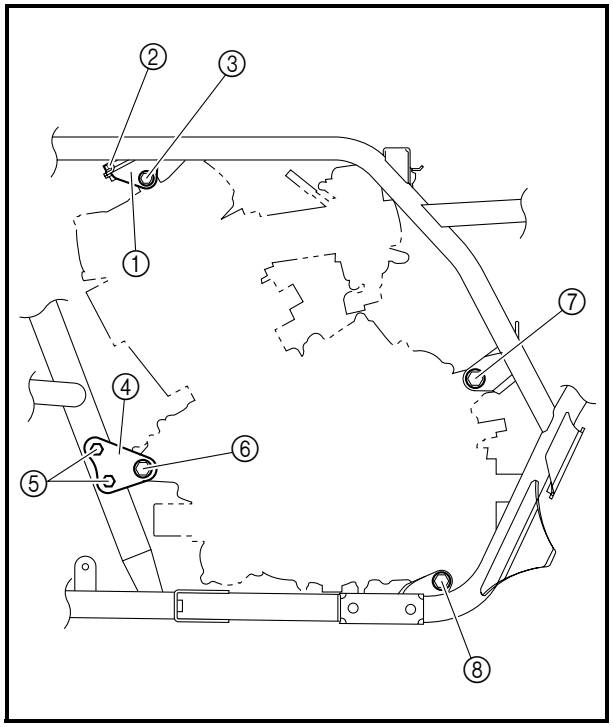


**INSTALLING THE ENGINE**

1. Install:
   - engine bracket (front upper) ①
   - engine bracket bolt (front upper) ②
   - engine mounting bolt (front upper)/nut ③
   - engine bracket (front lower) ④
   - engine bracket bolt (front lower) ⑤
   - engine mounting bolt (front lower) ⑥
   - engine mounting bolt (rear upper)/nut ⑦
   - engine mounting bolt (rear lower)/nut ⑧

**NOTE:**

Do not fully tighten the bolts and nuts.

2. Tighten:
   - engine bracket bolt (front upper) ②
     **34 Nm (3.4 m · kg, 24 ft · lb)**
   - engine mounting bolt (front upper)/nut ③
     **34 Nm (3.4 m · kg, 24 ft · lb)**
   - engine bracket bolt (front lower) ⑤
     **34 Nm (3.4 m · kg, 24 ft · lb)**
   - engine mounting bolt (front lower) ⑥
     **69 Nm (6.9 m · kg, 50 ft · lb)**
   - engine mounting bolt (rear upper)/nut ⑦
     **69 Nm (6.9 m · kg, 50 ft · lb)**
   - engine mounting bolt (rear lower)/nut ⑧
     **69 Nm (6.9 m · kg, 50 ft · lb)**

## OIL COOLER

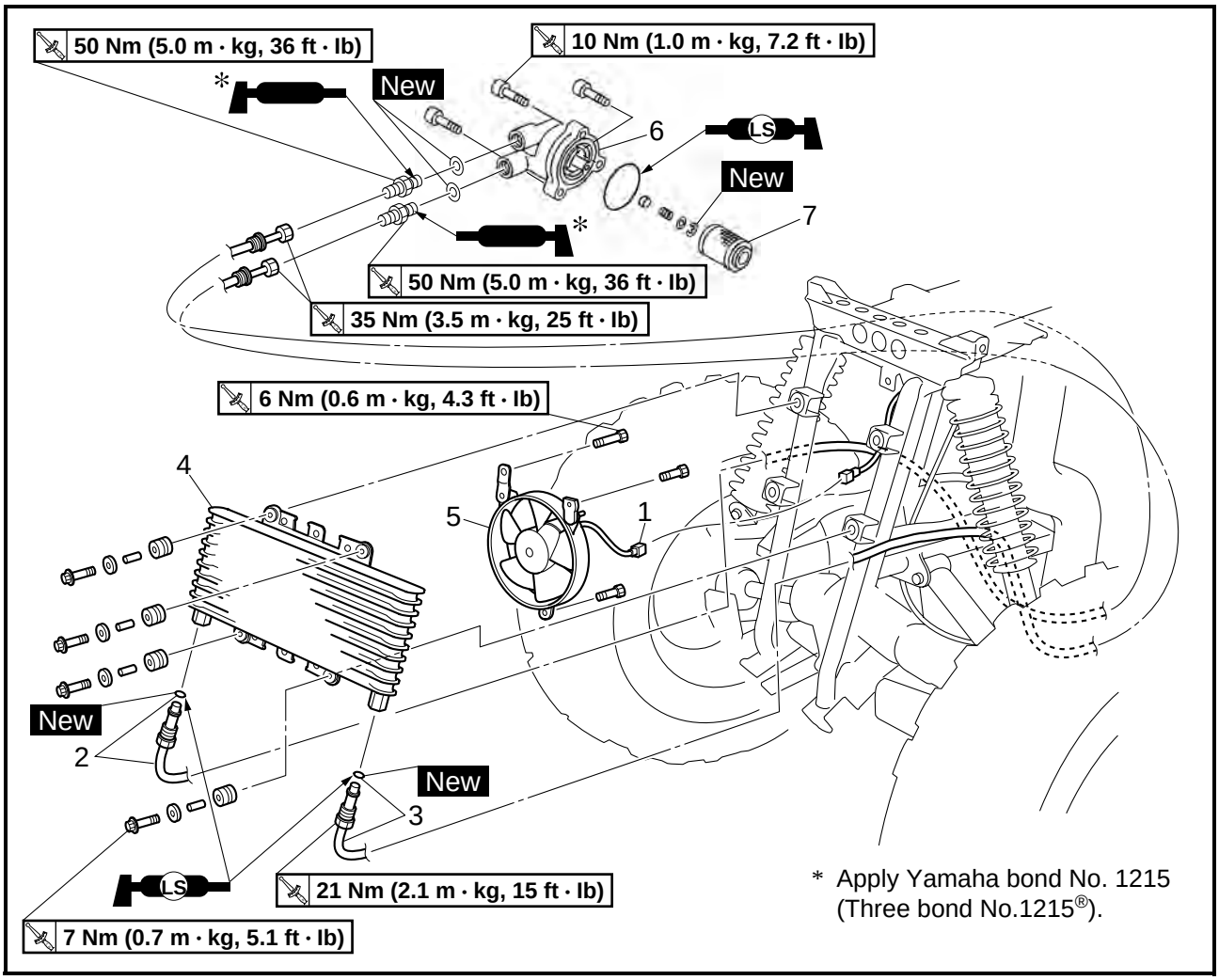


| Order | Job/Part | Q'ty | Remarks |
|---|---|---|---|
| | **Removing the oil cooler** | | Remove the parts in the order listed. |
| | Right footrest board | | Refer to "FOOTREST BOARDS" in chapter 3. |
| | Front fender | | |
| | Front fender inner panel | | |
| | Engine oil | | Drain. Refer to "CHANGING THE ENGINE OIL" in chapter 3. |
| 1 | Oil cooler fan coupler | 1 | Disconnect. |
| 2 | Oil cooler inlet hose/O-ring | 1/1 | |
| 3 | Oil cooler outlet hose/O-ring | 1/1 | |
| 4 | Oil cooler | 1 | |
| 5 | Oil cooler fan motor | 1 | |
| 6 | Oil filter element cover | 1 | |
| 7 | Oil filter element | 1 | |
| | | | For installation, reverse the removal procedure. |

## CYLINDER HEAD

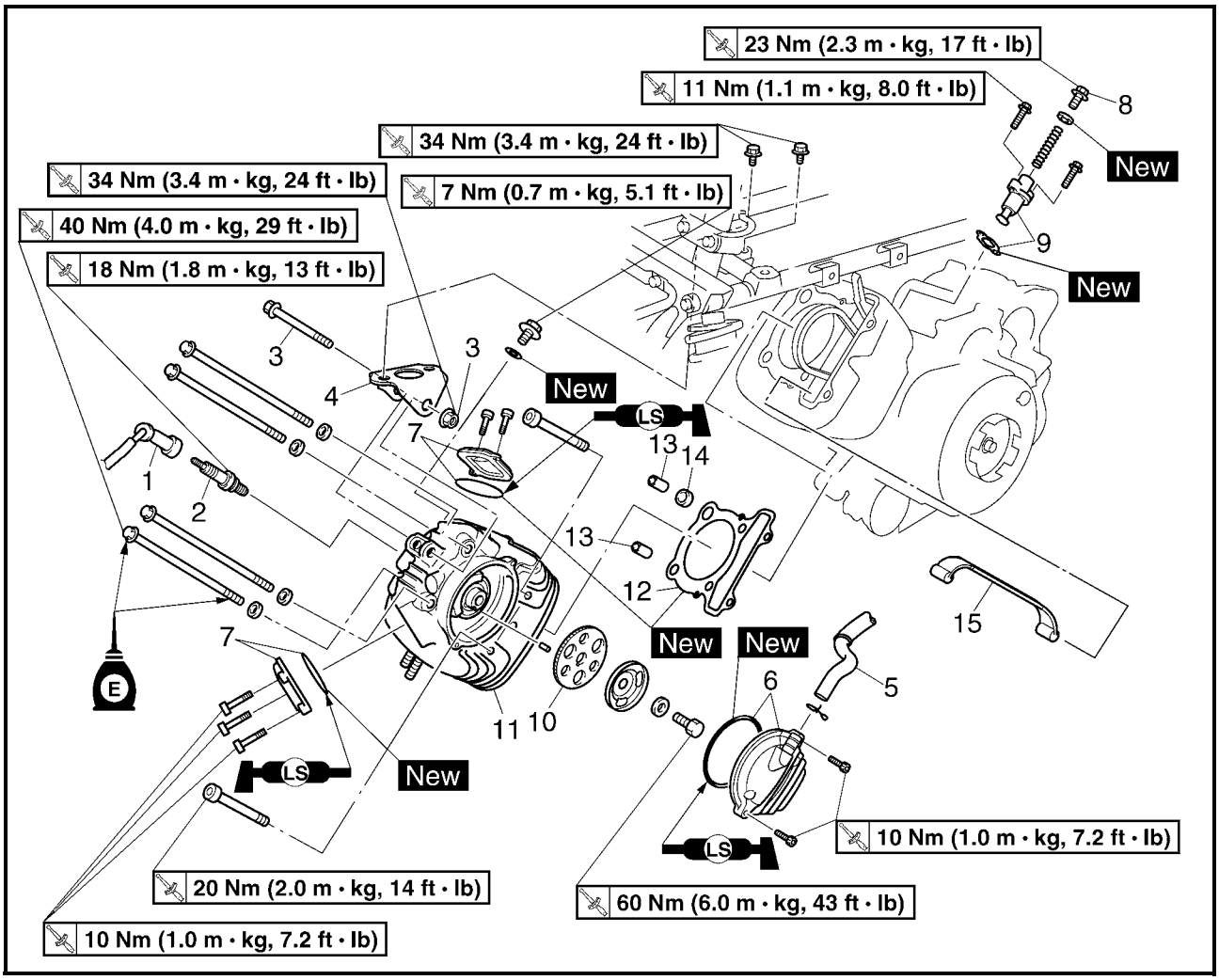


| Order | Job/Part | Q'ty | Remarks |
|---|---|---|---|
| | **Removing the cylinder head** | | Remove the parts in the order listed. |
| | Fuel tank/air filter case<br>Front fender | | Refer to "SEAT, CARRIERS, FENDERS, FUEL TANK AND AIR FILTER" in chapter 3. |
| | Exhaust pipe/muffler | | Refer to "ENGINE REMOVAL". |
| | Carburetor assembly | | Refer to "CARBURETOR" in chapter 5. |
| | Recoil starter/timing mark accessing screw | | Refer to "ADJUSTING THE VALVE CLEARANCE" in chapter 3. |
| 1 | Spark plug cap | 1 | Disconnect. |
| 2 | Spark plug | 1 | |
| 3 | Engine mounting bolt (front upper)/nut | 1/1 | |
| 4 | Engine bracket (front upper) | 1 | |
| 5 | Cylinder head breather hose | 1 | |
| 6 | Camshaft sprocket cover/O-ring | 1/1 | |
| 7 | Tappet cover/O-ring | 2/2 | |

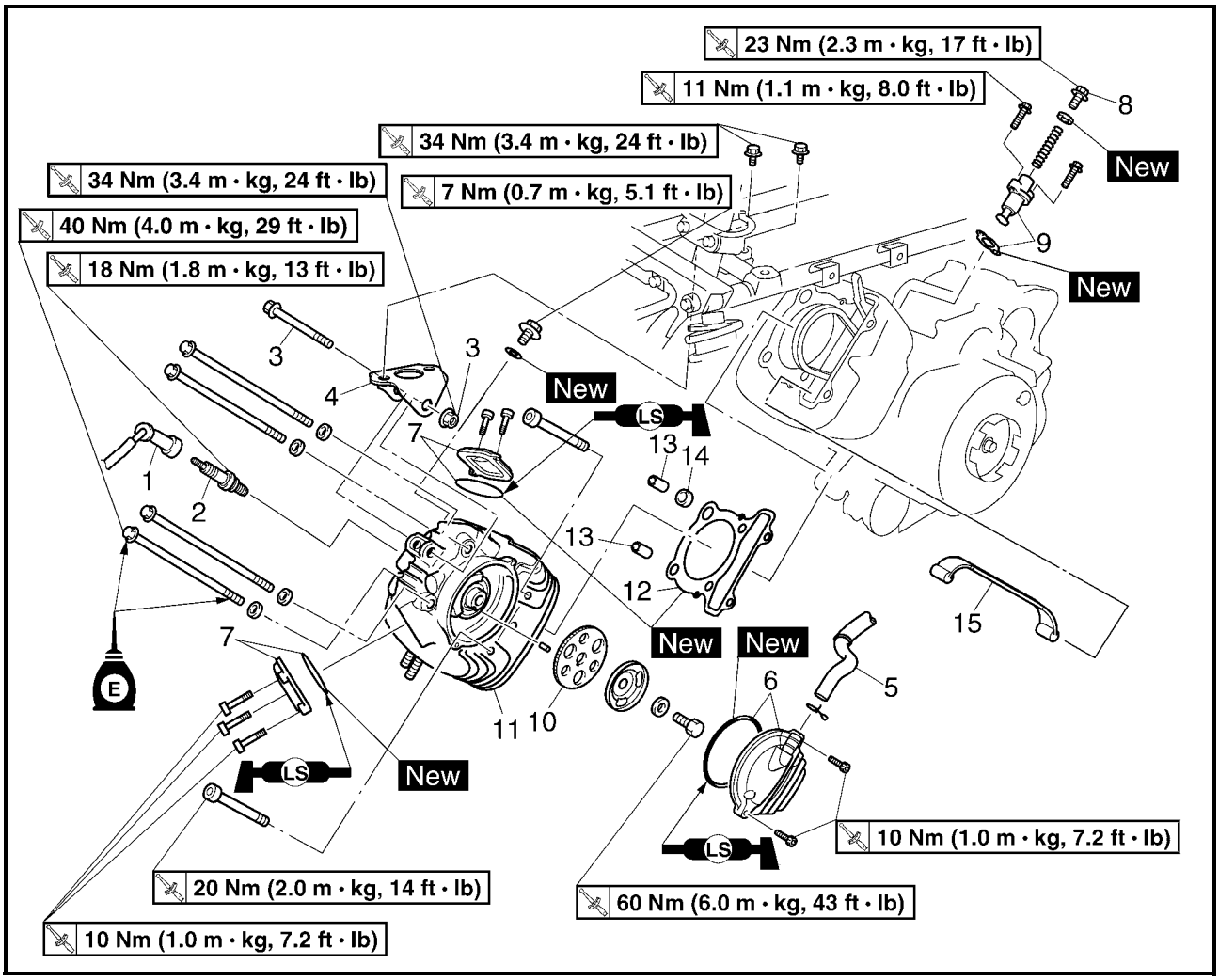


| Order | Job/Part | Q'ty | Remarks |
|---|---|---|---|
| 8 | Timing chain tensioner cap bolt | 1 | Refer to "REMOVING THE CYLINDER HEAD" and "INSTALLING THE CYLINDER HEAD". |
| 9 | Timing chain tensioner/gasket | 1/1 | |
| 10 | Camshaft sprocket | 1 | |
| 11 | Cylinder head | 1 | |
| 12 | Cylinder head gasket | 1 | |
| 13 | Dowel pin | 2 | |
| 14 | Gasket | 1 | |
| 15 | Timing chain guide (exhaust) | 1 | |
| | | | For installation, reverse the removal procedure. |

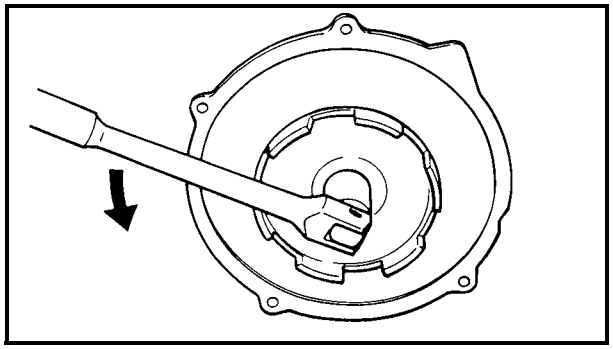

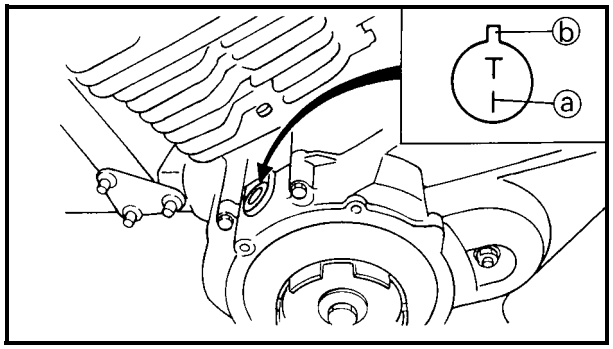


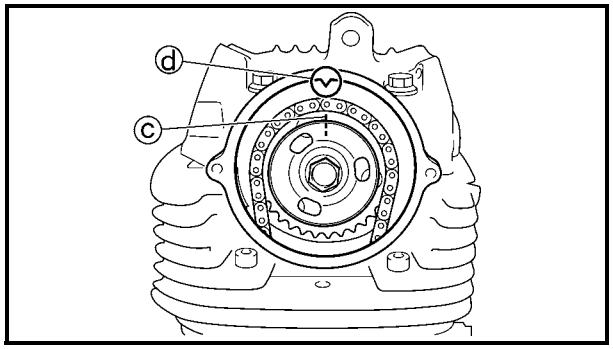


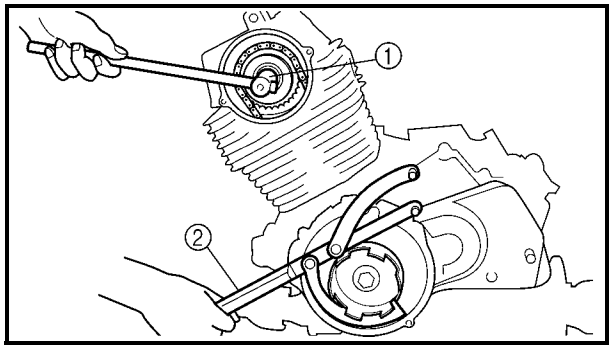


**REMOVING THE CYLINDER HEAD**

1. Align:
   - "I" mark ⓐ on the AC magneto rotor (with stationary pointer ⓑ on the AC magneto cover)

▼▼▼▼▼▼▼▼▼▼▼▼▼▼▼▼▼▼▼▼▼▼▼▼▼▼▼▼▼▼▼▼▼▼▼▼▼▼

a. Turn the crankshaft counterclockwise with a wrench.
b. When the piston is at the top dead center (TDC) on the compression stroke, align the "I" mark ⓐ on the AC magneto rotor with the stationary pointer ⓑ on the AC magneto cover.

**NOTE:**

- To position the piston at the top dead center (TDC) on the compression stroke, align the "I" mark ⓒ on the camshaft sprocket with the stationary pointer ⓓ on the cylinder head.
- If there is no clearance, rotate the crankshaft counterclockwise one turn.

▲▲▲▲▲▲▲▲▲▲▲▲▲▲▲▲▲▲▲▲▲▲▲▲▲▲▲▲▲▲▲▲▲▲▲▲▲▲

2. Loosen:
   - camshaft sprocket bolt ①

**NOTE:**

Hold the starter pulley with the rotor holding tool ② while loosening the camshaft sprocket bolt.

**Rotor holding tool**
**90890-01235**
**Universal magneto & rotor holder**
**YU-01235**

3. Loosen:
   - timing chain tensioner cap bolt

4. Remove:
   - timing chain tensioner (along with the gasket)
   - camshaft sprocket

**NOTE:**
To prevent the timing chain from falling into the crankcase, fasten it with a wire.

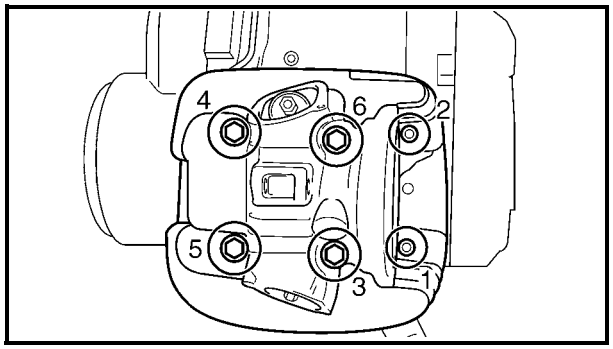


5. Remove:
   - cylinder head

**NOTE:**
- Loosen the bolts in the proper sequence as shown.
- Loosen each bolt 1/2 of a turn at a time. After all of the bolts are fully loosened, remove them.

### CHECKING THE TAPPET COVERS

1. Check:
   - tappet covers
   - camshaft sprocket covers
     Cracks/damage → Replace.

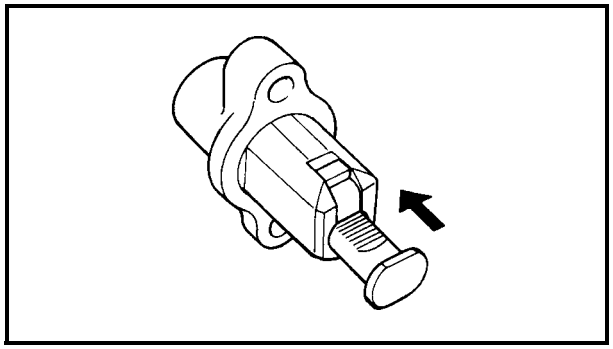

EBS00229

### CHECKING THE TIMING CHAIN TENSIONER

1. Check:
   - timing chain tensioner
     Cracks/damage → Replace.
2. Check:
   - one-way cam operation
     Rough movement → Replace the timing chain tensioner.

3. Check:
   - timing chain tensioner cap bolt
   - copper washer New
   - spring
   - one-way cam
   - gasket New
   - timing chain tensioner rod
     Damage/wear → Replace the defective part(s).

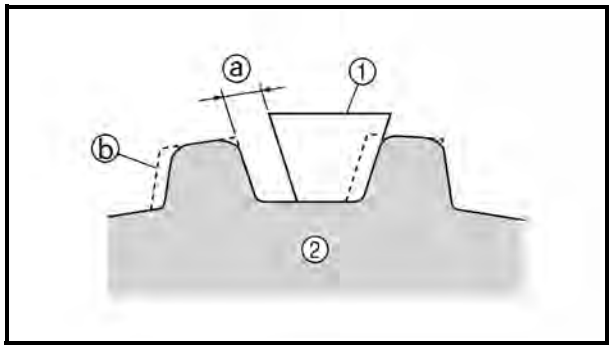


**CHECKING THE CAMSHAFT SPROCKET**

1. Check:
   - camshaft sprocket
     Wear/damage → Replace the camshaft sprocket and timing chain as a set.

ⓐ 1/4 of a tooth
ⓑ Correct
① Timing chain
② Sprocket

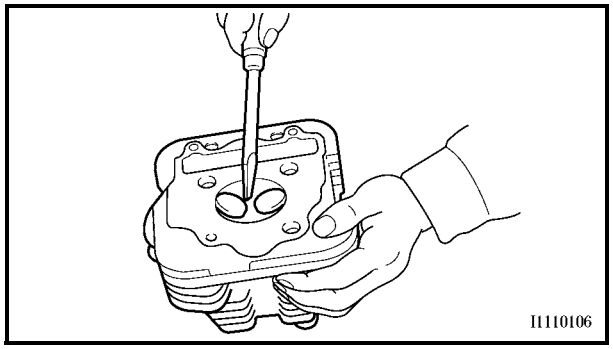


EBS00230

**CHECKING THE CYLINDER HEAD**

1. Eliminate:
   - combustion chamber carbon deposits (with a rounded scraper)

**NOTE:**

Do not use a sharp instrument to avoid damaging or scratching:
- spark plug bore threads
- valve seats

2. Check:
   - cylinder head
     Damage/scratches → Replace.

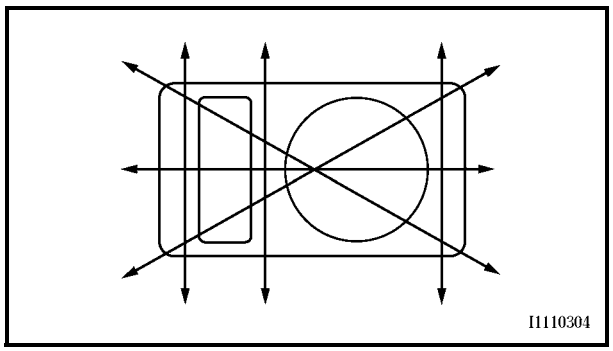


3. Measure:
   - cylinder head warpage
     Out of specification → Resurface the cylinder head.

| | |
|---|---|
| | **Maximum cylinder head warpage 0.03 mm (0.0012 in)** |

▼▼▼▼▼▼▼▼▼▼▼▼▼▼▼▼▼▼▼▼▼▼▼▼▼▼▼▼▼▼▼▼▼▼

a. Place a straightedge and a thickness gauge across the cylinder head.
b. Measure the warpage.
c. If the limit is exceeded, resurface the cylinder head as follows.
d. Place 400 ~ 600 grit wet sandpaper on the surface plate and resurface the cylinder head using a figure-eight sanding pattern.

**NOTE:**

To ensure an even surface, rotate the cylinder head several times.

▲▲▲▲▲▲▲▲▲▲▲▲▲▲▲▲▲▲▲▲▲▲▲▲▲▲▲▲▲▲▲▲▲▲

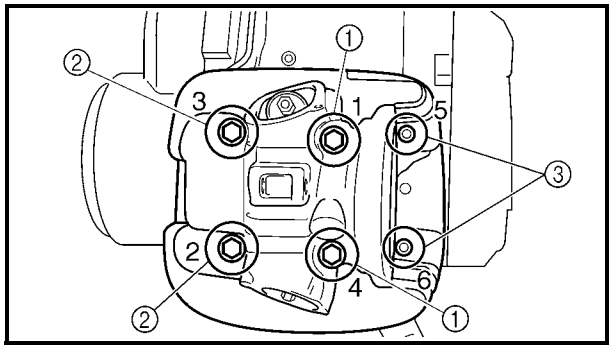


**INSTALLING THE CYLINDER HEAD**

1. Install:
   - cylinder head
   - cylinder head bolts

**NOTE:**

Lubricate the cylinder head bolt ① and ② threads and mating surface with engine oil.

2. Tighten:
   - cylinder head bolts ①: ℓ = 245 mm (9.65 in)
     **40 Nm (4.0 m · kg, 29 ft · lb)**
   - cylinder head bolts ②: ℓ = 223 mm (8.78 in)
     **40 Nm (4.0 m · kg, 29 ft · lb)**
   - cylinder head bolts ③
     **20 Nm (2.0 m · kg, 14 ft · lb)**

**NOTE:**

Tighten the cylinder head bolts in the proper tightening sequence as shown and torque them in two stages.

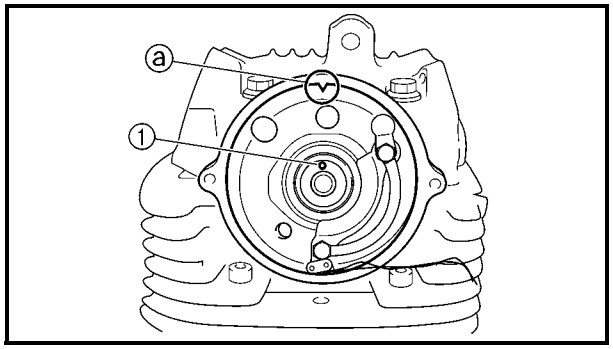


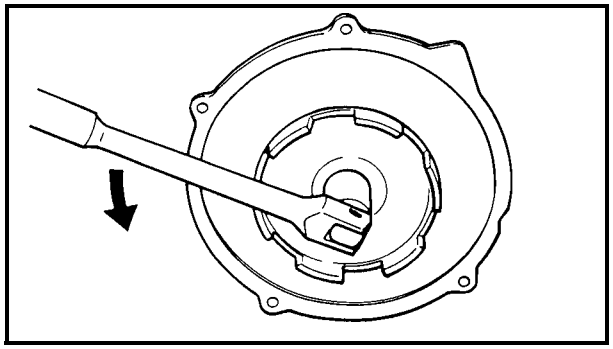

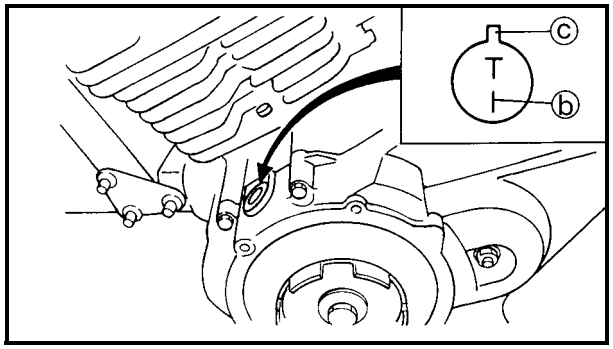


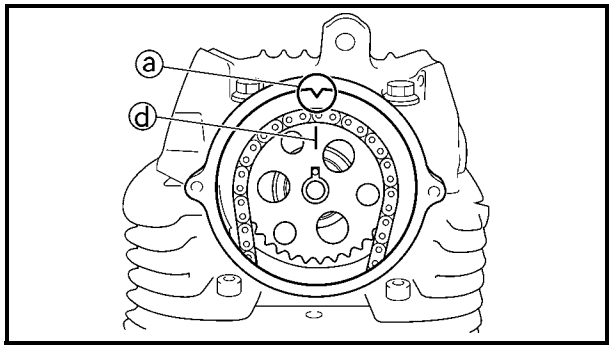


3. Install:
   - camshaft sprocket

▼▼▼▼▼▼▼▼▼▼▼▼▼▼▼▼▼▼▼▼▼▼▼▼▼▼▼▼▼▼▼▼▼▼

a. Align the camshaft pin ① with the stationary pointer ⓐ on the cylinder head.
b. Turn the crankshaft counterclockwise with a wrench.
c. Align the “I” mark ⓑ on the AC magneto rotor with the stationary pointer ⓒ on the AC magneto cover. When the “I” mark is aligned with the stationary pointer, the piston is at the top dead center (TDC).

**CAUTION:**

**Do not turn the crankshaft during the camshaft sprocket installation.**

d. Install the timing chain onto the camshaft sprocket, then the camshaft sprocket onto the camshaft, and then finger tighten the camshaft sprocket bolt.
e. Make sure the “I” mark ⓓ on the camshaft sprocket with the stationary pointer ⓐ on the cylinder head.
f. Force the camshaft clockwise and counterclockwise to remove timing chain slack.
g. Insert a screwdriver into the timing chain tensioner hole and push the timing chain guide inward.
h. While pushing the timing chain guide, make sure the “I” mark ⓓ on the camshaft sprocket with stationary pointer ⓐ on the cylinder head.
i. If the marks are aligned, tighten the camshaft sprocket bolt. If the marks are not aligned, change the meshing position of the camshaft sprocket and timing chain.

▲▲▲▲▲▲▲▲▲▲▲▲▲▲▲▲▲▲▲▲▲▲▲▲▲▲▲▲▲▲▲▲▲▲

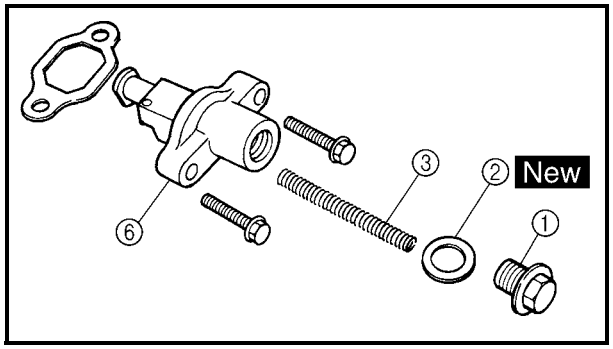


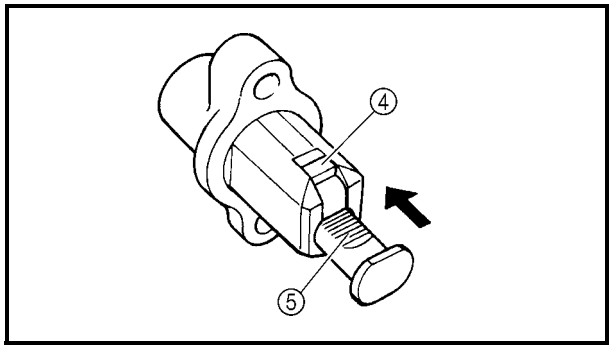


4. Install:
   - timing chain tensioner

▼▼▼▼▼▼▼▼▼▼▼▼▼▼▼▼▼▼▼▼▼▼▼▼▼▼▼▼▼▼▼▼▼▼

a. Remove the timing chain tensioner cap bolt ①, copper washer ② and spring ③.
b. Release the timing chain tensioner one-way cam ④ and push the timing chain tensioner rod ⑤ all the way into the timing chain tensioner housing.
c. Install the timing chain tensioner ⑥ and a new gasket onto the cylinder.

| | |
|---|---|
| | **Timing chain tensioner bolt**<br>**11 Nm (1.1 m · kg, 8.0 ft · lb)** |

**⚠ WARNING**

**Always use a new gasket.**

d. Install the spring, washer and timing chain tensioner cap bolt.

| | |
|---|---|
| | **Timing chain tensioner cap bolt**<br>**23 Nm (2.3 m · kg, 17 ft · lb)** |

▲▲▲▲▲▲▲▲▲▲▲▲▲▲▲▲▲▲▲▲▲▲▲▲▲▲▲▲▲▲▲▲▲▲

5. Turn:
   - crankshaft
     (several turns counterclockwise)

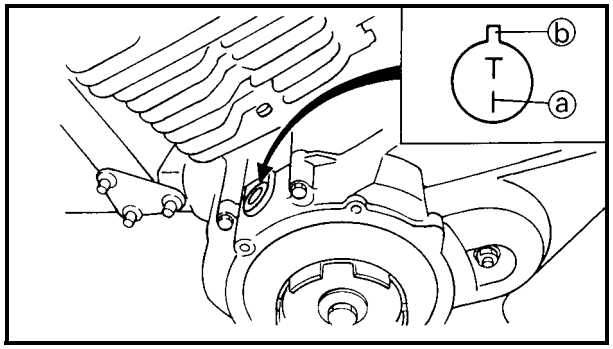


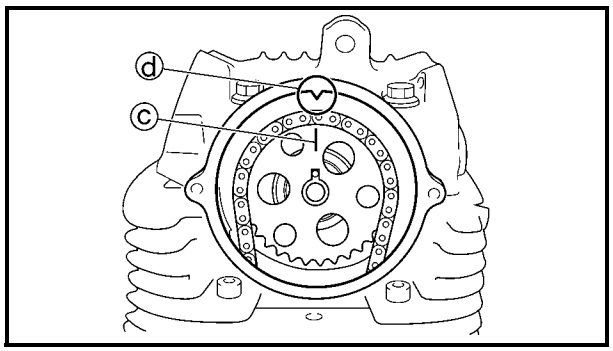


6. Check:
   - "I" mark ⓐ

**NOTE:**

Check that the "I" mark on the AC magneto rotor is aligned with the stationary pointer ⓑ on the AC magneto cover.

- "I" mark ⓒ

**NOTE:**

Check that the "I" mark on the camshaft sprocket is aligned with the stationary pointer ⓓ on the cylinder head.

Out of alignment → Correct.
Repeat steps (3) to (6), if necessary.

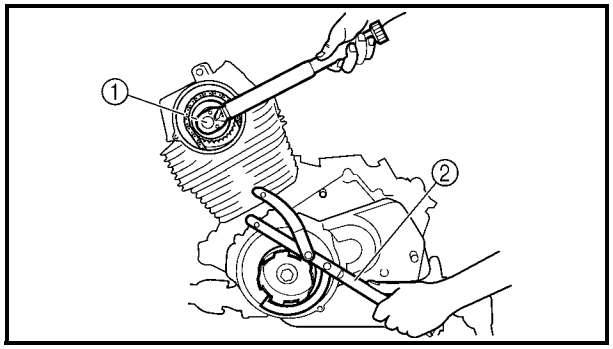


7. Tighten:
   - camshaft sprocket bolt ①

| | |
|---|---|
| | **60 Nm (6.0 m · kg, 43 ft · lb)** |

**NOTE:**
Hold the starter pulley with the rotor holding tool ② while tightening the camshaft sprocket bolt.

| | |
|---|---|
| | **Rotor holding tool**<br>**90890-01235**<br>**Universal magneto & rotor holder**<br>**YU-01235** |

**CAUTION:**
**Be sure to tighten the camshaft sprocket bolts to the specified torque to avoid the possibility of the bolts coming loose and damaging the engine.**

8. Measure:
   - valve clearance
     Out of specification → Adjust.
     Refer to “ADJUSTING THE VALVE CLEARANCE” in chapter 3.

## CAMSHAFT, ROCKER ARMS AND VALVES

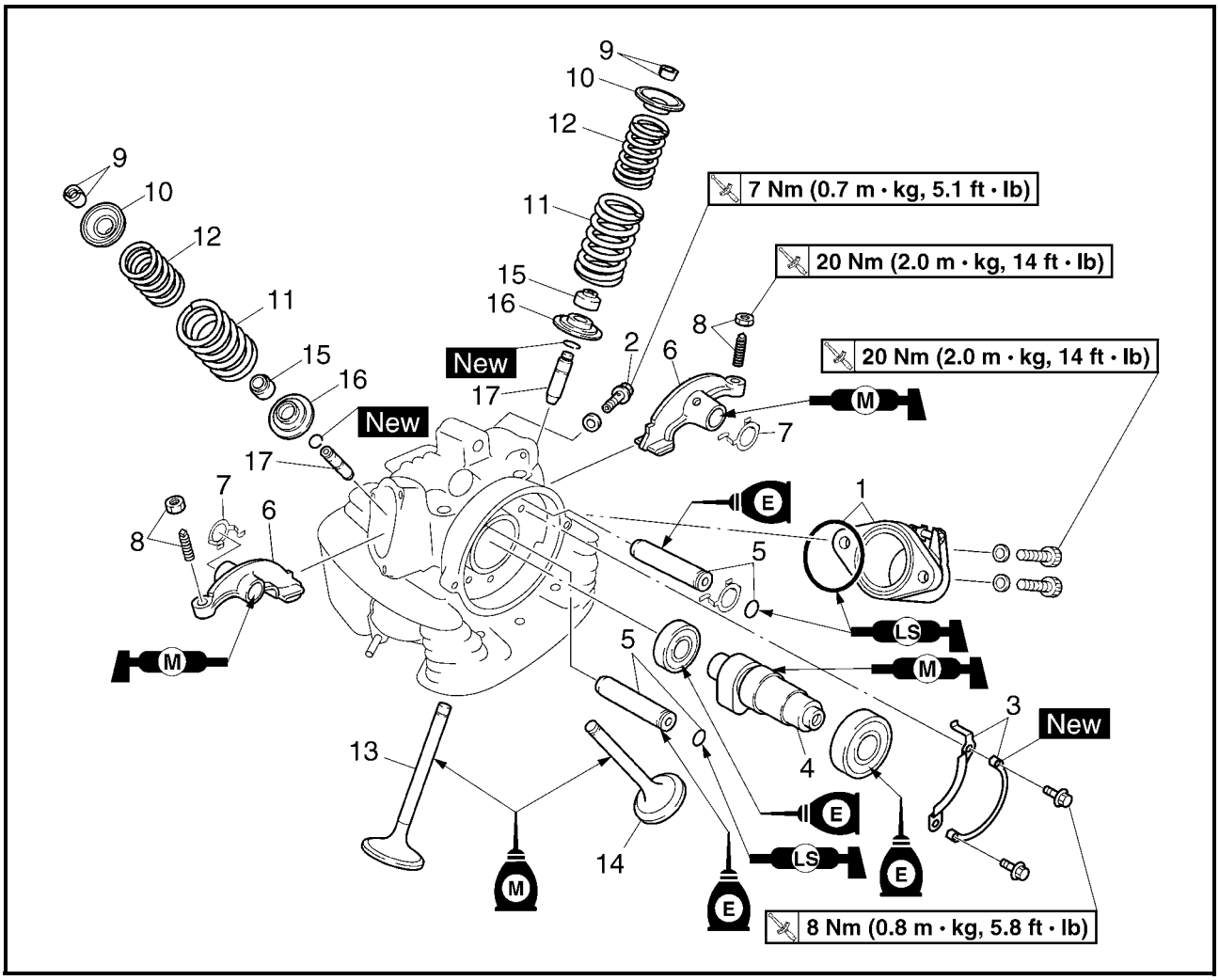


| Order | Job/Part | Q'ty | Remarks |
|---|---|---|---|
| | **Removing the camshaft, rocker arms and valves** | | Remove the parts in the order listed. |
| 1 | Intake manifold/O-ring | 1/1 | |
| 2 | Oil gallery bolt | 1 | |
| 3 | Lock washer/bearing retainer | 1/1 | |
| 4 | Camshaft | 1 | Refer to "REMOVING THE ROCKER ARMS AND CAMSHAFT" and "INSTALLING THE CAMSHAFT AND ROCKER ARMS". |
| 5 | Rocker arm shaft/O-ring | 2/2 | |
| 6 | Rocker arm | 2 | |
| 7 | Wave washer | 2 | |
| 8 | Locknut/valve adjuster | 2/2 | |

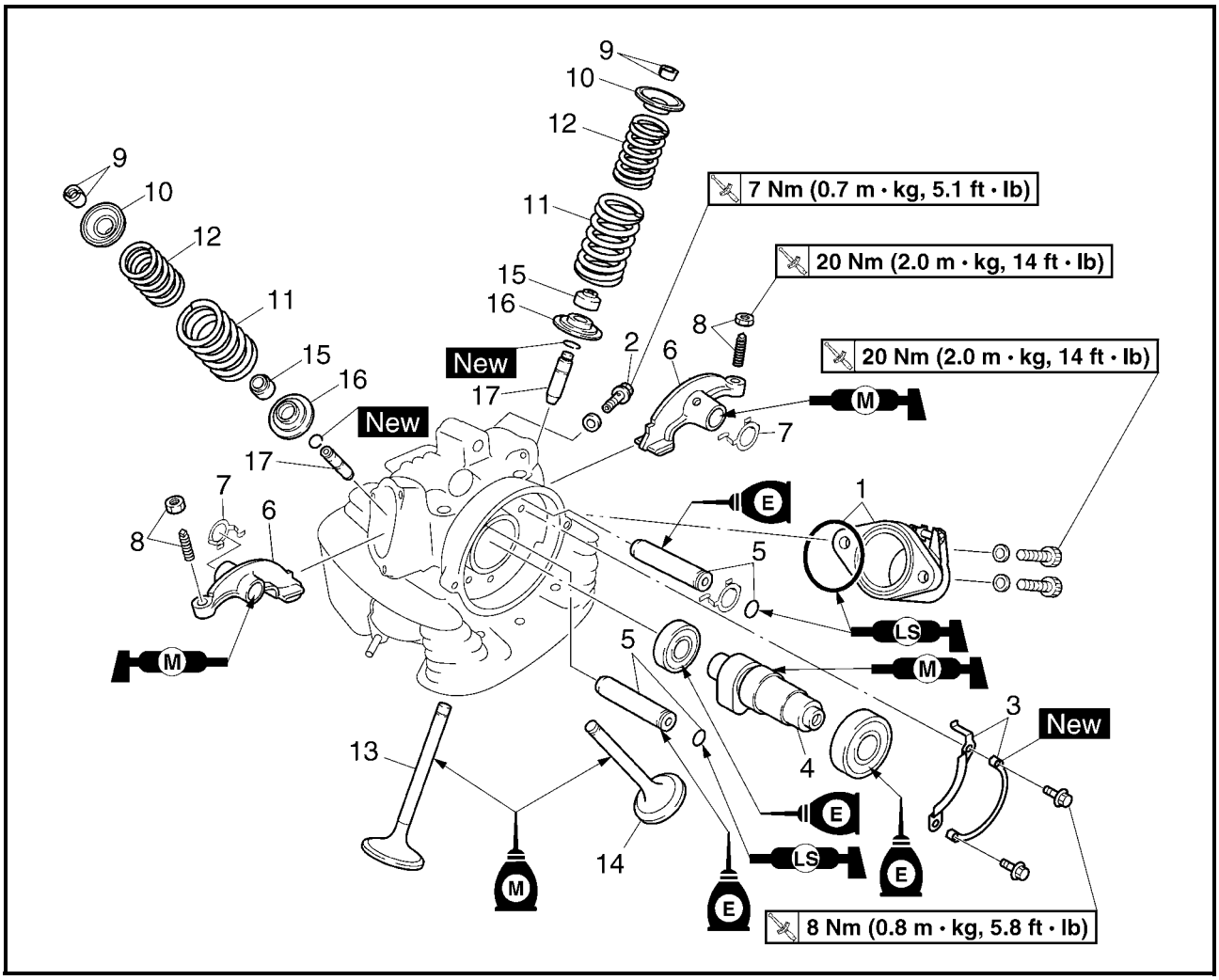


| Order | Job/Part | Q'ty | Remarks |
|---|---|---|---|
| 9 | Valve cotter | 4 | Refer to "REMOVING THE VALVES AND VALVE SPRINGS" and "INSTALLING THE VALVES AND VALVE SPRINGS". |
| 10 | Valve spring retainer | 2 | |
| 11 | Outer valve spring | 2 | |
| 12 | Inner valve spring | 2 | |
| 13 | Intake valve | 1 | |
| 14 | Exhaust valve | 1 | |
| 15 | Valve stem seal | 2 | |
| 16 | Valve spring seat | 2 | |
| 17 | Valve guide | 2 | |
| | | | For installation, reverse the removal procedure. |

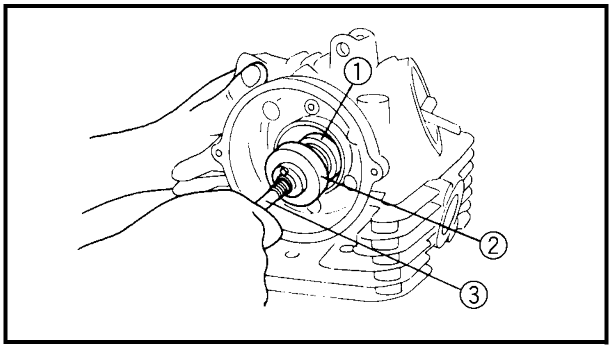


### REMOVING THE ROCKER ARMS AND CAMSHAFT

1. Straighten the lock washer tabs.
2. Remove:
   - camshaft ①
   - camshaft bearings ②

**NOTE:**
Screw in a M10 bolt ③ into the thread hole on the camshaft, and pull out the camshaft.

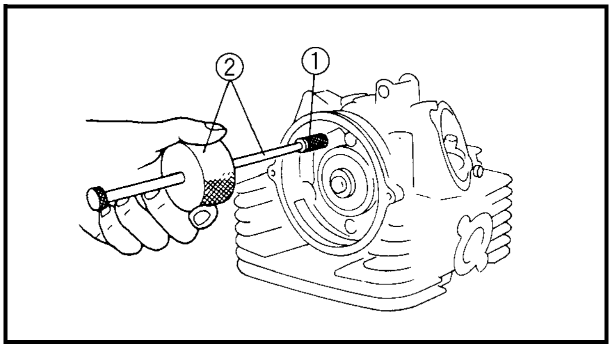


3. Remove:
   - rocker arm shafts (intake and exhaust) ①
   - rocker arms

**NOTE:**
Use a slide hammer ② to remove the rocker arm shafts.

**Slide hammer bolt**
**90890-01083**
**Slide hammer bolt 6 mm**
**YU-01083-1**
**Weight**
**90890-01084, YU-01083-3**

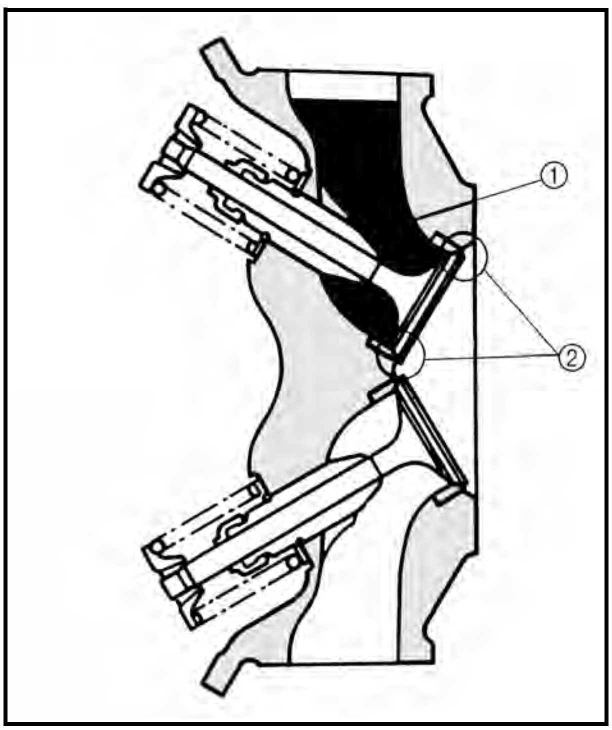


### REMOVING THE VALVES AND VALVE SPRINGS

1. Check:
   - valve sealing
     Leakage at the valve seat → Check the valve face, valve seat and valve seat width.
     Refer to "CHECKING THE VALVES AND VALVE SPRINGS".

▼▼▼▼▼▼▼▼▼▼▼▼▼▼▼▼▼▼▼▼▼▼▼▼▼▼▼▼▼▼▼▼▼▼▼

a. Pour a clean solvent ① into the intake and exhaust ports.
b. Check that the valve seals properly.
   There should be no leakage at the valve seat ②.

▲▲▲▲▲▲▲▲▲▲▲▲▲▲▲▲▲▲▲▲▲▲▲▲▲▲▲▲▲▲▲▲▲▲▲

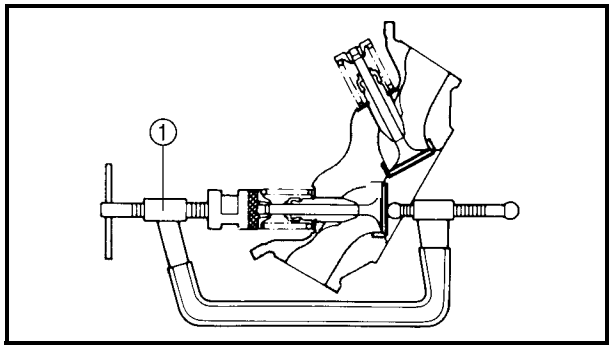


2. Remove:
   - valve cotters

**NOTE:**
Attach a valve spring compressor ① between the valve spring retainer and the cylinder head to remove the valve cotters.

| | |
|---|---|
| | **Valve spring compressor**<br>**90890-04019, YM-04019** |

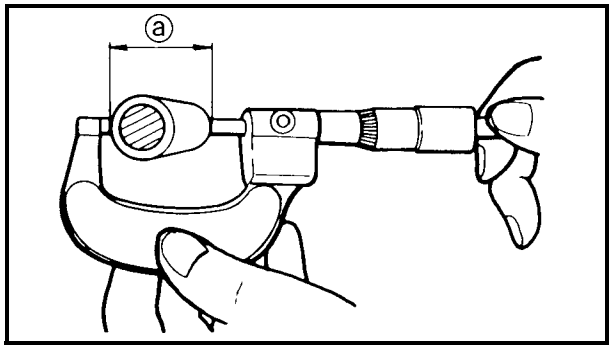


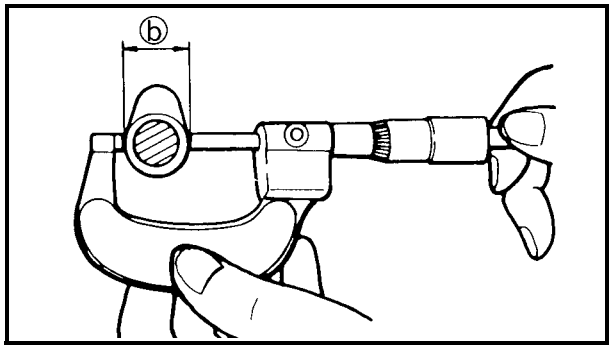


**CHECKING THE CAMSHAFT**

1. Check:
   - cam lobes
     Pitting/scratches/blue discoloration → Replace.
2. Measure:
   - cam lobes length ⓐ and ⓑ.
     Out of specification → Replace.

| | |
|---|---|
| | **Camshaft lobe limit**<br>**Intake**<br>**ⓐ 40.52 mm (1.595 in)**<br>**ⓑ 32.08 mm (1.263 in)**<br>**Exhaust**<br>**ⓐ 40.52 mm (1.595 in)**<br>**ⓑ 32.08 mm (1.263 in)** |

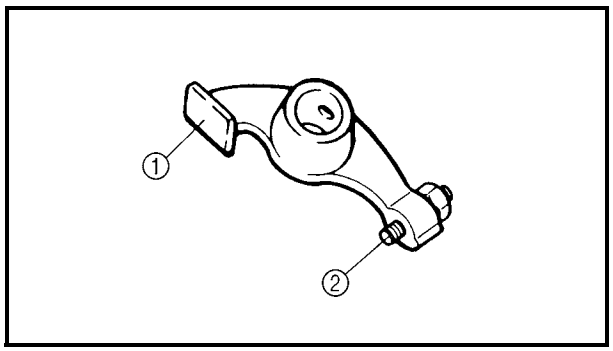


**CHECKING THE ROCKER ARMS AND ROCKER ARM SHAFTS**

1. Check:
   - camshaft lobe contact surface ①
   - valve adjusters ②
     Blue discoloration/pitting/scratches → Replace.

2. Check:
   - rocker arms
   - rocker arm shafts
     Damage/wear → Replace.
3. Check:
   - camshaft lobe
     Excessive wear → Replace the camshaft.

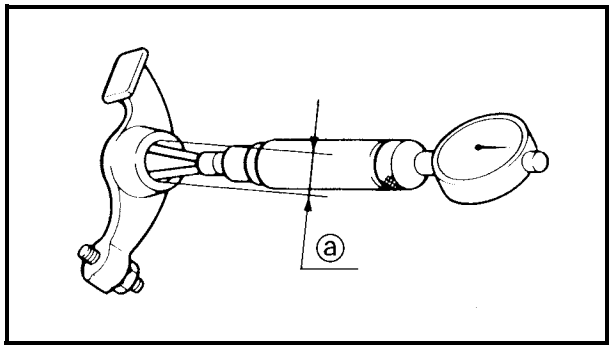


4. Measure:
   - rocker arm inside diameter ⓐ
     Out of specification → Replace.

**Rocker arm inside diameter**
**11.980 ~ 11.998 mm**
**(0.4717 ~ 0.4724 in)**

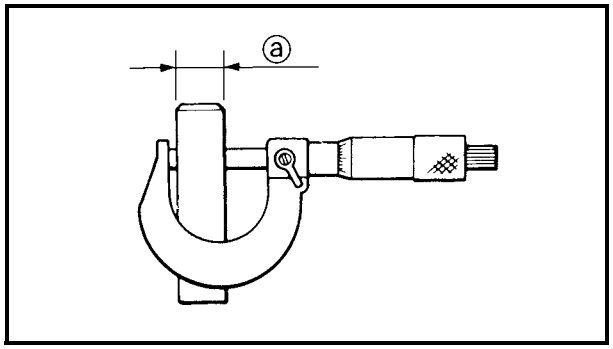


5. Measure:
   - rocker arm shaft outside diameter ⓐ
     Out of specification → Replace.

**Rocker arm shaft outside diameter**
**11.961 ~ 11.971 mm**
**(0.4709 ~ 0.4713 in)**

6. Calculate:
   - rocker-arm-to-rocker-arm-shaft clearance

**NOTE:**
Calculate the clearance by subtracting the rocker arm shaft outside diameter from the rocker arm inside diameter.

Out of specification → Replace.

**Rocker-arm-to-rocker-arm-shaft clearance**
**0.009 ~ 0.037 mm**
**(0.0004 ~ 0.0015 in)**
**<Limit>: 0.08 mm (0.0031 in)**

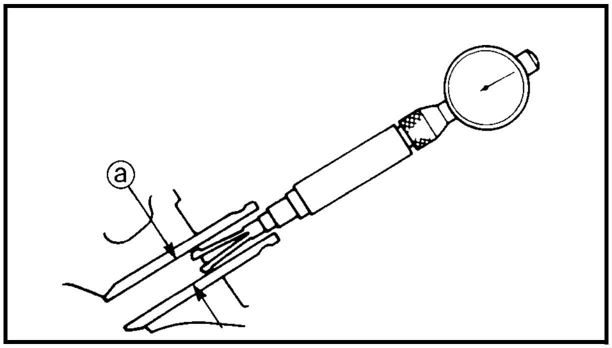


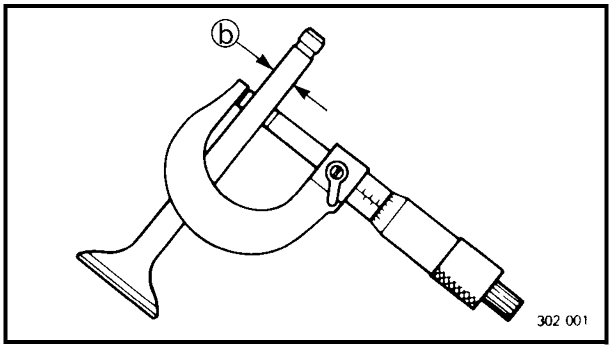


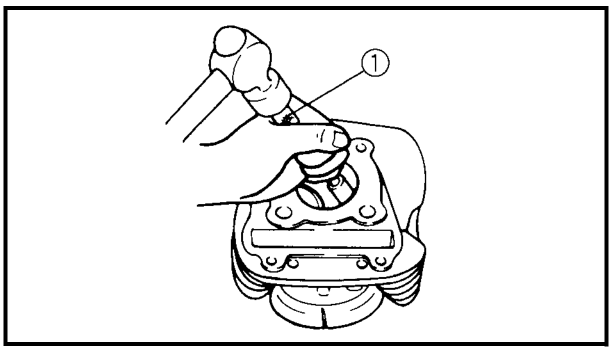


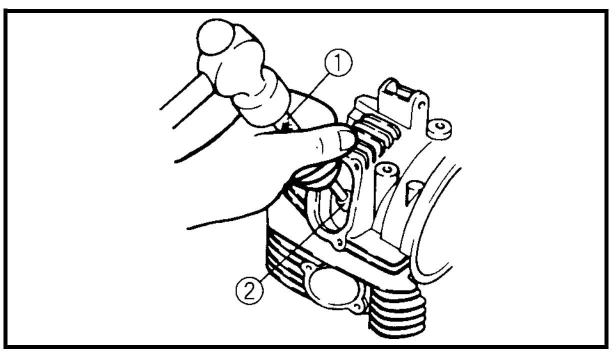


### CHECKING THE VALVES AND VALVE SPRINGS

1. Measure:
   - stem-to-guide clearance

**Stem-to-guide clearance =**
**valve guide inside diameter ⓐ –**
**valve stem diameter ⓑ**

Out of specification → Replace the valve guide.

**Clearance (stem to guide)**
**Intake**
**0.010 ~ 0.037 mm**
**(0.0004 ~ 0.0015 in)**
**<Limit>: 0.080 mm (0.0031 in)**
**Exhaust**
**0.030 ~ 0.057 mm**
**(0.0012 ~ 0.0022 in)**
**<Limit>: 0.100 mm (0.0039 in)**

2. Replace:
   - valve guide

▼▼▼▼▼▼▼▼▼▼▼▼▼▼▼▼▼▼▼▼▼▼▼▼▼▼▼▼▼▼▼▼▼▼▼

**NOTE:**
To ease guide removal, installation and to maintain correct fit, heat the cylinder head to 100 °C (212 °F) in an oven.

a. Remove the valve guide using a valve guide remover ①.
b. Install the new valve guide using a valve guide remover ① and valve guide installer ②.

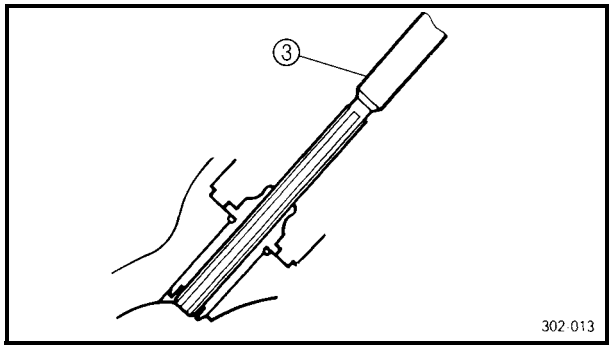


c. After installing the valve guide, bore the valve guide using a valve guide reamer ③ to obtain proper stem-to-guide clearance.

**Valve guide remover (7.0 mm)**
**90890-01225, YM-01225-A**
**Valve guide installer (ø7.0)**
**90890-04017**
**Valve guide installer (7.0 mm)**
**YM-04017**
**Valve guide reamer (7.0 mm)**
**90890-01227, YM-01227**

**NOTE:**
After replacing the valve guide, reface the valve seat.

▲▲▲▲▲▲▲▲▲▲▲▲▲▲▲▲▲▲▲▲▲▲▲▲▲▲▲▲▲▲▲▲

3. Check:
   - valve face
     Pitting/wear → Grind the face.
   - valve stem end
     Mushroom shape or diameter larger than the body of the stem → Replace.

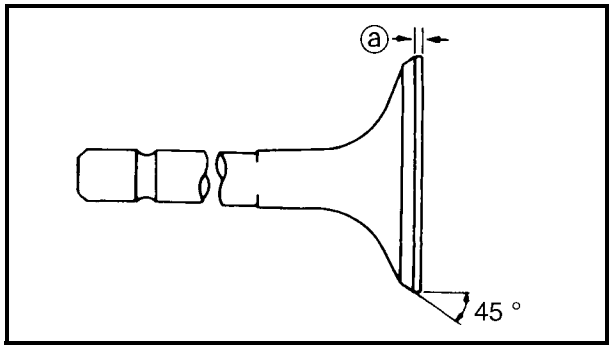


4. Measure:
   - margin thickness ⓐ
     Out of specification → Replace.

**Margin thickness**
**Intake**
**1.0 ~ 1.4 mm (0.0394 ~ 0.0551 in)**
**Exhaust**
**0.8 ~ 1.2 mm (0.0315 ~ 0.0472 in)**

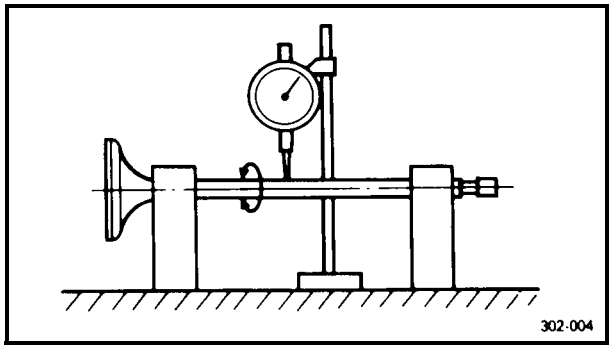


5. Measure:
   - runout (valve stem)
     Out of specification → Replace.

**Runout limit**
**0.01 mm (0.0004 in)**

**NOTE:**
- When installing a new valve, always replace the guide.
- When a valve is removed or replaced, always replace the oil seal.

6. Eliminate:
   - carbon deposits
     (from the valve face and valve seat)
7. Check:
   - valve seat
     Pitting/wear → Reface the valve seat.

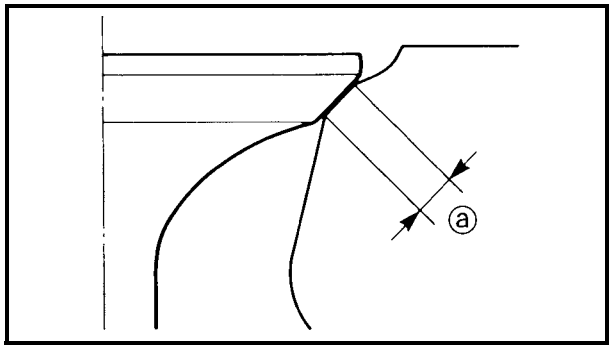


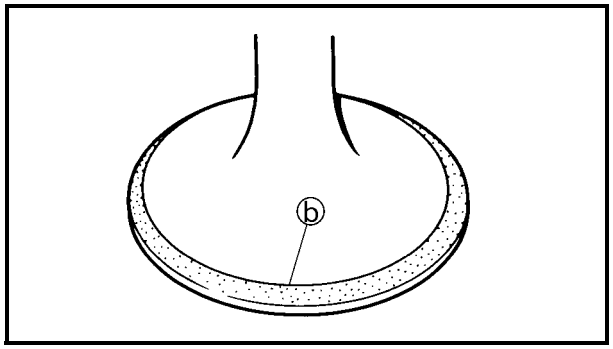


8. Measure:
   - valve seat width ⓐ
     Out of specification → Reface the valve seat.

**Valve seat width**
**Intake**
**1.2 ~ 1.4 mm (0.0472 ~ 0.0551 in)**
**<Limit>: 1.6 mm (0.0630 in)**
**Exhaust**
**1.2 ~ 1.4 mm (0.0472 ~ 0.0551 in)**
**<Limit>: 1.6 mm (0.0630 in)**

▼▼▼▼▼▼▼▼▼▼▼▼▼▼▼▼▼▼▼▼▼▼▼▼▼▼▼▼▼▼▼▼▼▼

a. Apply Mechanic's blueing dye (Dykem) ⓑ to the valve face.
b. Install the valve into the cylinder head.
c. Press the valve through the valve guide and onto the valve seat to make a clear pattern.
d. Measure the valve seat width. Where the valve seat and valve face made contact, blueing will have been removed.
e. If the valve seat is too wide, too narrow, or the seat is not centered, the valve seat must be refaced.

▲▲▲▲▲▲▲▲▲▲▲▲▲▲▲▲▲▲▲▲▲▲▲▲▲▲▲▲▲▲▲▲▲▲

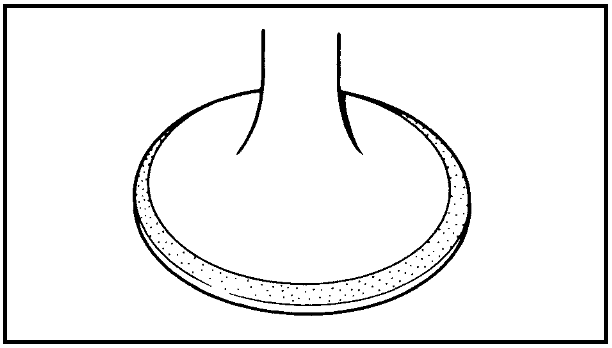

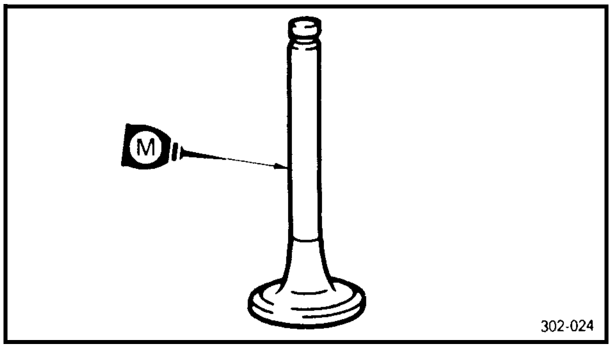


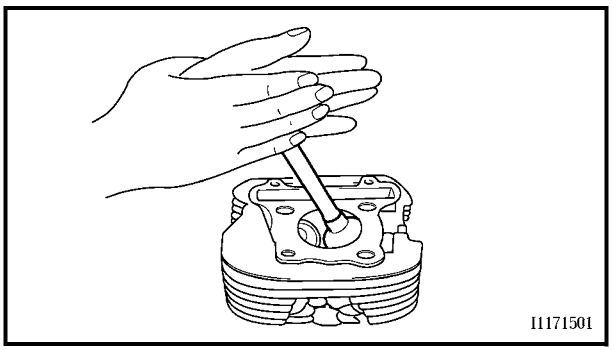


9. Lap:
   - valve face
   - valve seat

**NOTE:**
After refacing the valve seat or replacing the valve and valve guide, the valve seat and valve face should be lapped.

▼▼▼▼▼▼▼▼▼▼▼▼▼▼▼▼▼▼▼▼▼▼▼▼▼▼▼▼▼▼▼▼▼▼

a. Apply a coarse lapping compound to the valve face.

**CAUTION:**

**Do not let the compound enter the gap between the valve stem and the guide.**

b. Apply molybdenum disulfide oil to the valve stem.
c. Install the valve into the cylinder head.
d. Turn the valve until the valve face and valve seat are evenly polished, then clean off all of the compound.

**NOTE:**
For best lapping results, lightly tap the valve seat while rotating the valve back and forth between your hands.

e. Apply a fine lapping compound to the valve face and repeat the above steps.

**NOTE:**
After every lapping operation, be sure to clean off all of the compound from the valve face and valve seat.

f. Apply Mechanic's blueing dye (Dykem) to the valve face.
g. Install the valve into the cylinder head.
h. Press the valve through the valve guide and onto the valve seat to make a clear pattern.
i. Measure the valve seat width again. If the valve seat width is out of specification, reface and relap the valve seat.

▲▲▲▲▲▲▲▲▲▲▲▲▲▲▲▲▲▲▲▲▲▲▲▲▲▲▲▲▲▲▲▲▲▲

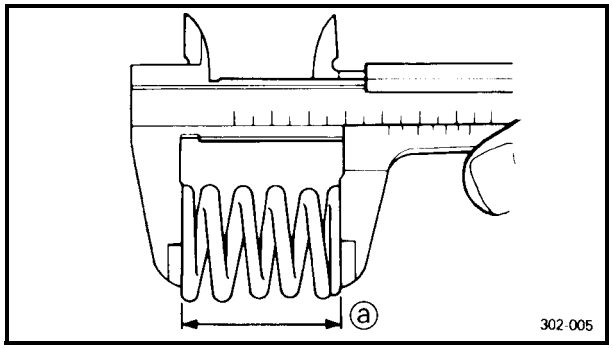


10.Measure:
- valve spring free length ⓐ
  Out of specification → Replace.

**Free length (valve spring)**
**Inner**
**39.9 mm (1.57 in)**
**<Limit>: 37.9 mm (1.49 in)**
**Outer**
**43.27 mm (1.70 in)**
**<Limit>: 41.11 mm (1.62 in)**

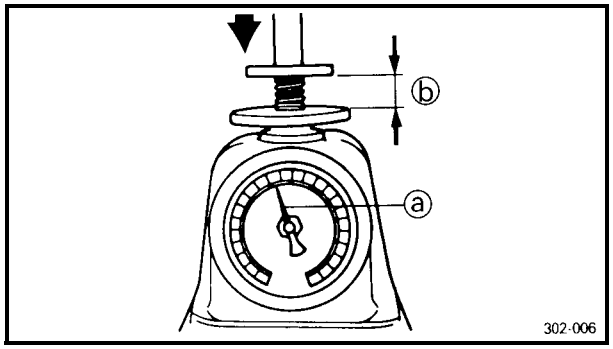


11.Measure:
- compressed spring force ⓐ
  Out of specification → Replace.

ⓑ Installed length

**Compressed spring force**
**Inner**
**93.2 ~ 108.9 N at 34.1 mm**
**(9.5 ~ 11.1 kg,**
**20.94 ~ 24.47 lb at 1.34 in)**
**Outer**
**202.0 ~ 237.3 N at 37.1 mm**
**(20.6 ~ 24.2 kg,**
**45.41 ~ 53.35 lb at 1.46 in)**

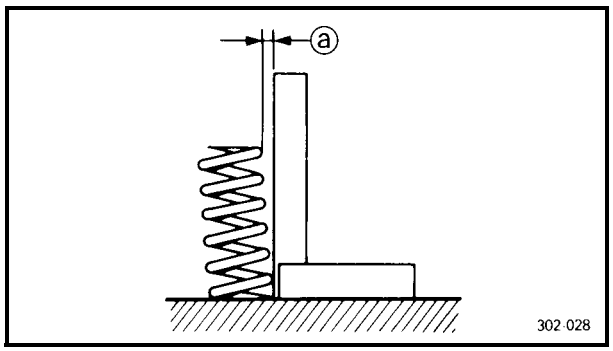


12.Measure:
- spring tilt ⓐ
  Out of specification → Replace.

**Spring tilt limit**
**Inner**
**2.5°/1.7 mm (0.067 in)**
**Outer**
**2.5°/1.9 mm (0.075 in)**

### INSTALLING THE VALVES AND VALVE SPRINGS

1. Apply:
   - molybdenum disulfide oil
     (onto the valve stem and valve stem seal)
2. Install:
   - valve spring seat
   - valve stem seal New
   - valve
   - valve springs (inner and outer)
   - valve spring retainer

**NOTE:**
Install the valve springs with the larger pitch ⓐ facing upwards.

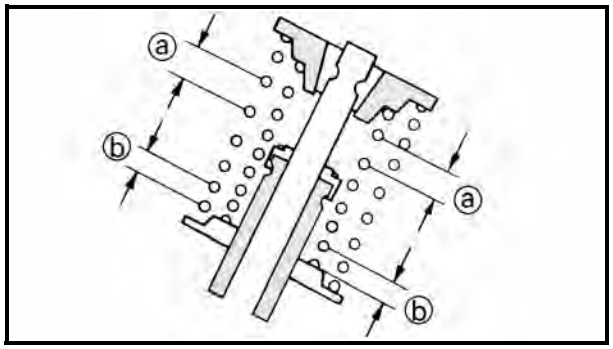


ⓑ Smaller pitch

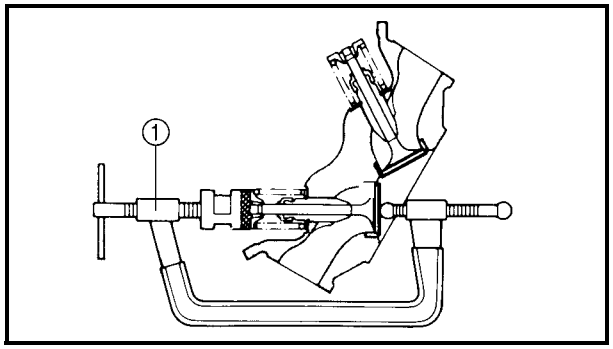


3. Install:
   - valve cotters

**NOTE:**
Install the valve cotters while compressing the valve springs with the valve spring compressor ①.

| | |
|---|---|
| | **Valve spring compressor**<br>**90890-04019, YM-04019** |

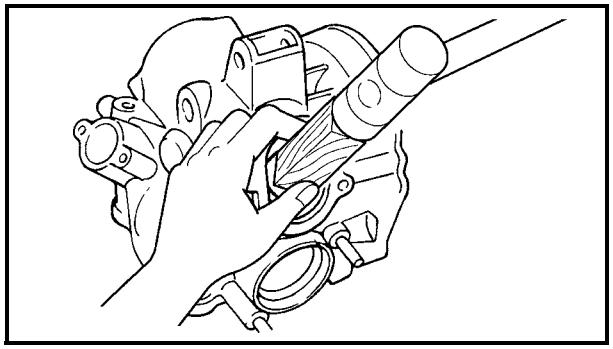

4. To secure the valve cotters onto the valve stem, lightly tap the valve tip with a piece of wood.

**CAUTION:**
**Hitting the valve tip with excessive force could damage the valve.**

### INSTALLING THE CAMSHAFT AND ROCKER ARMS

1. Apply:
   - engine oil
     (onto the rocker arm shafts)

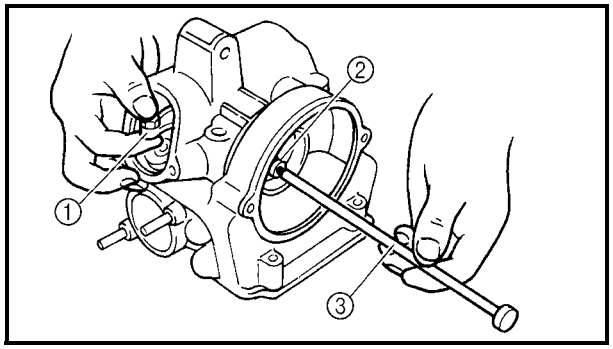


2. Install:
   - rocker arms ①
   - rocker arm shafts (intake and exhaust) ②

**NOTE:**
Use a slide hammer bolt ③ to install the rocker arm shafts.

**Slide hammer bolt**
**90890-01083**
**Slide hammer bolt 6 mm**
**YU-01083-1**

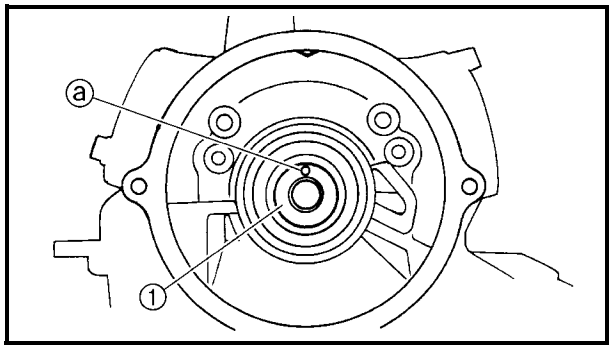


3. Install:
   - camshaft ①
   - bearing retainer
   - lock washer New

**8 Nm (0.8 m · kg, 5.8 ft · lb)**

**NOTE:**
- Install the camshaft pin hole ⓐ facing up.
- Bend the lock washer tabs along a flat side of the bolt.

## CYLINDER AND PISTON

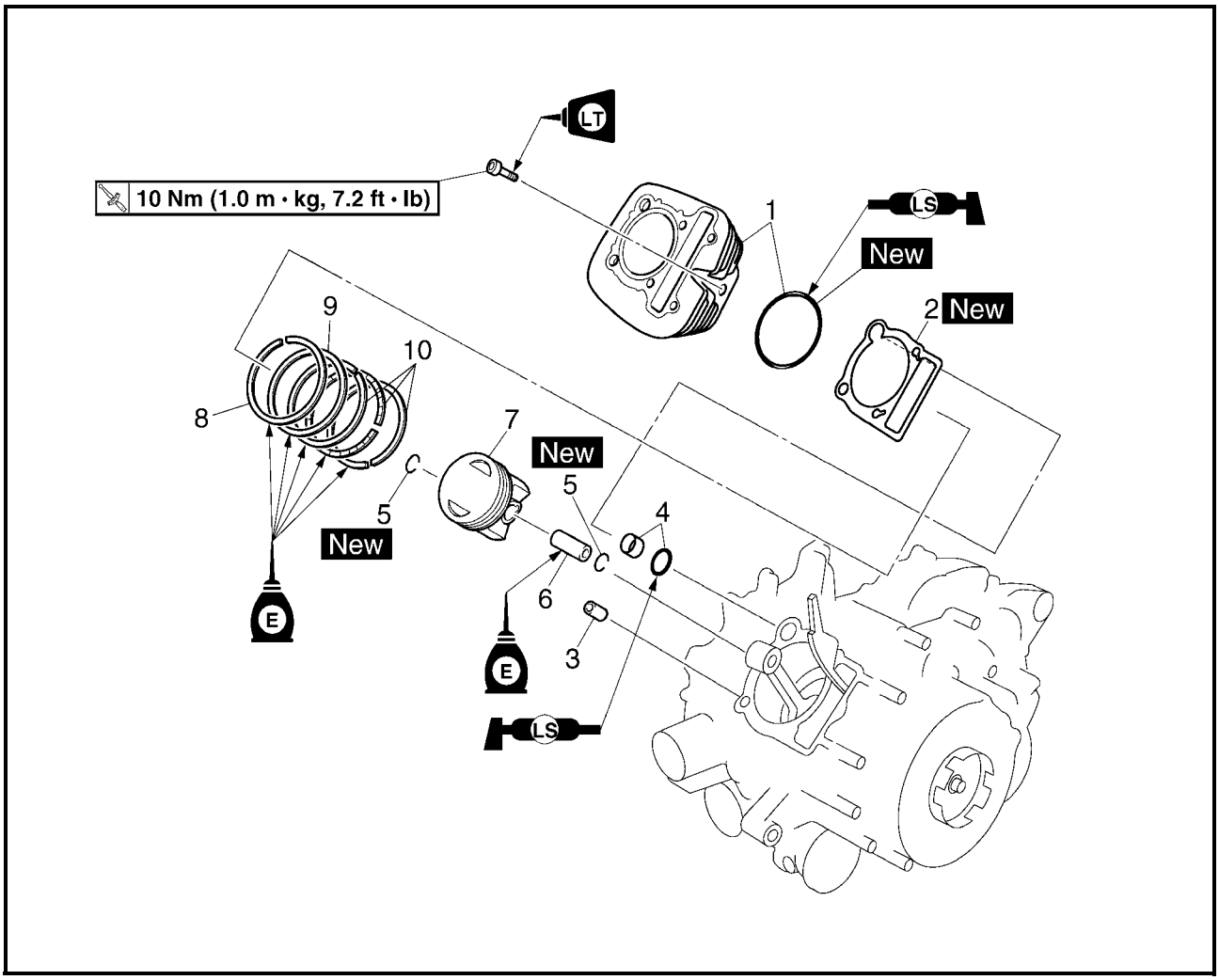


| Order | Job/Part | Q'ty | Remarks |
|---|---|---|---|
| | **Removing the cylinder and piston** | | Remove the parts in the order listed. |
| | Cylinder head | | Refer to "CYLINDER HEAD". |
| 1 | Cylinder/O-ring | 1/1 | Refer to "INSTALLING THE PISTON AND CYLINDER". |
| 2 | Cylinder gasket | 1 | |
| 3 | Dowel pin | 1 | |
| 4 | Dowel pin/O-ring | 1/1 | |
| 5 | Piston pin clip | 2 | Refer to "REMOVING THE PISTON" and "INSTALLING THE PISTON AND CYLINDER". |
| 6 | Piston pin | 1 | |
| 7 | Piston | 1 | |
| 8 | Top ring | 1 | |
| 9 | 2nd ring | 1 | |
| 10 | Oil ring | 1 | |
| | | | For installation, reverse the removal procedure. |

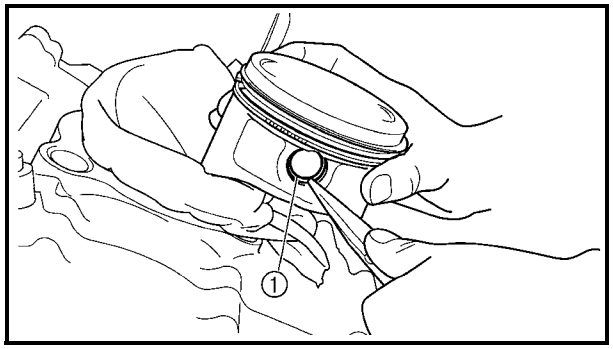


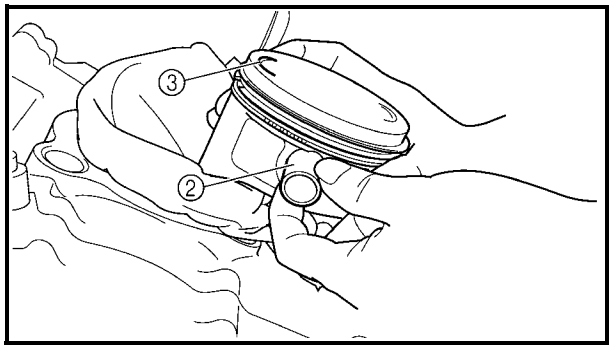


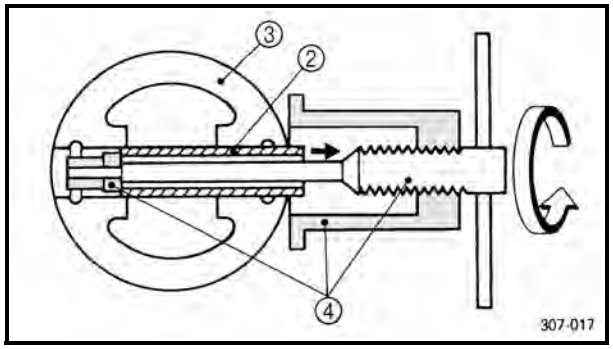


**REMOVING THE PISTON**

1. Remove:
   - piston pin clips ①
   - piston pin ②
   - piston ③

**NOTE:**

Before removing piston pin, deburr the clip groove and pin hole area. If the piston pin clip groove is deburred and the piston pin is still difficult to remove, use the piston pin puller ④.

**Piston pin puller set**
**90890-01304**
**Piston pin puller**
**YU-01304**

**CAUTION:**

**Do not use a hammer to drive the piston pin out.**

2. Remove:
   - piston rings

**NOTE:**

Spread the end gaps apart while at the same time lifting the piston ring over the top of the piston crown.

**CHECKING THE CYLINDER AND PISTON**

1. Check:
   - cylinder and piston walls
     Vertical scratches → Rebore or replace the cylinder and the piston.
2. Measure:
   - piston-to-cylinder clearance

▼▼▼▼▼▼▼▼▼▼▼▼▼▼▼▼▼▼▼▼▼▼▼▼▼▼▼▼▼▼▼▼▼▼

**1st step:**

a. Measure the cylinder bore “C” with a cylinder bore gauge ①.

ⓐ 40 mm (1.6 in) from the top of the cylinder

**NOTE:**

Measure cylinder bore “C” in parallel to and at right angles to the cylinder matching surface. Then, find the average of the measurements.

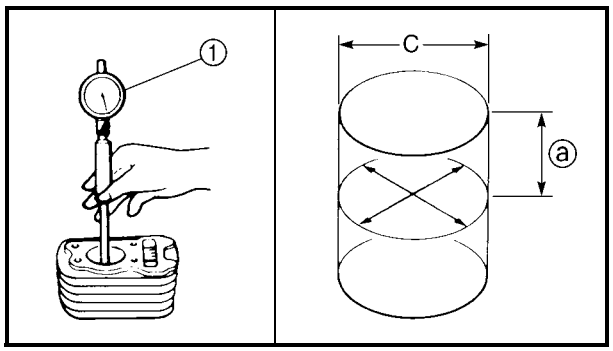

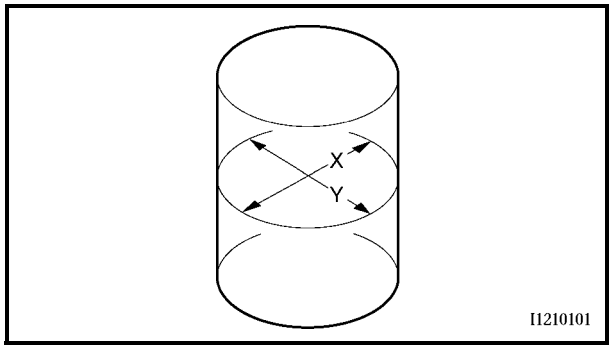


| | Standard | Wear limit |
|---|---|---|
| Cylinder bore “C” | 82.97 ~ 83.02 mm (3.267 ~ 3.269 in) | 83.15 mm (3.274 in) |
| $C = \frac{X + Y}{2}$ | | |

b. If out of specification, rebore or replace the cylinder, and replace the piston and piston rings as a set.

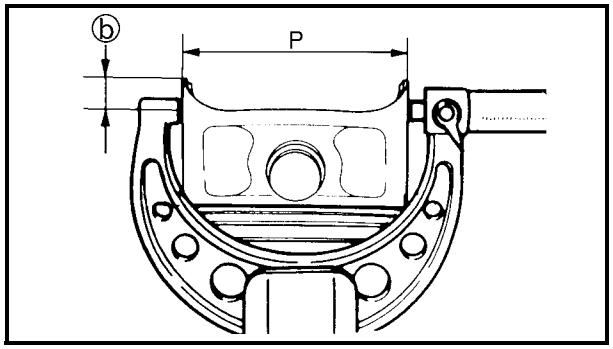


**2nd step:**

a. Measure piston skirt diameter “P” with a micrometer.

ⓑ 4.5 mm (0.18 in) from the piston bottom edge

| Piston skirt diameter “P” | |
|---|---|
| Standard | 82.92 ~ 82.97 mm (3.265 ~ 3.267 in) |

b. If out of specification, replace the piston and piston rings as a set.

**3rd step:**

a. Find the piston-to-cylinder clearance with the following formula.

**Piston-to-cylinder clearance =**
**Cylinder bore “C” –**
**Piston skirt diameter “P”**

**Piston-to-cylinder clearance**
**0.040 ~ 0.060 mm**
**(0.0016 ~ 0.0024 in)**
**<Limit>: 0.15 mm (0.0059 in)**

b. If out of specification, rebore or replace the cylinder, and replace the piston and piston rings as a set.

▲▲▲▲▲▲▲▲▲▲▲▲▲▲▲▲▲▲▲▲▲▲▲▲▲▲▲▲▲▲▲▲▲▲

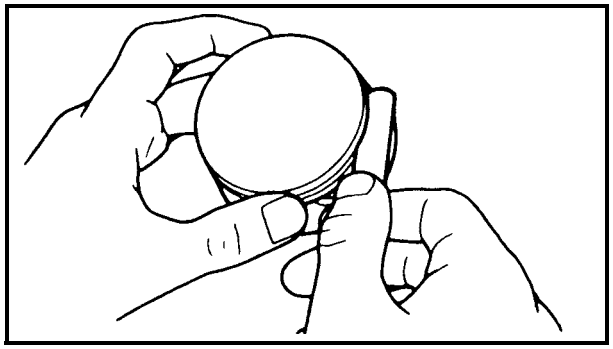

**CHECKING THE PISTON RINGS**

1. Measure:
   - piston ring side clearance
     Out of specification → Replace the piston and piston rings as a set.

**NOTE:**

Before measuring the piston ring side clearance, eliminate any carbon deposits from the piston ring grooves and piston rings.

**Piston ring side clearance**
**Top ring**
**0.04 ~ 0.08 mm**
**(0.0016 ~ 0.0031 in)**
**<Limit>: 0.12 mm (0.0047 in)**
**2nd ring**
**0.03 ~ 0.07 mm**
**(0.0012 ~ 0.0028 in)**
**<Limit>: 0.12 mm (0.0047 in)**

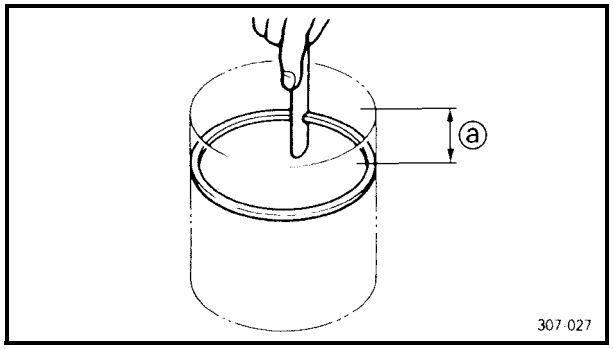


2. Install:
   - piston ring
     (into the cylinder)

**NOTE:**

Level the piston ring into the cylinder with the piston crown.

ⓐ 40 mm (1.6 in)

3. Measure:
   - piston ring end gap
     Out of specification → Replace the piston ring.

**NOTE:**

The oil ring expander spacer end gap cannot be measured. If the oil ring rail gap is excessive, replace all three piston rings.

**Piston ring end gap**
**Top ring**
**0.20 ~ 0.40 mm**
**(0.0079 ~ 0.0157 in)**
**<Limit>: 0.65 mm (0.0256 in)**
**2nd ring**
**0.20 ~ 0.40 mm**
**(0.0079 ~ 0.0157 in)**
**<Limit>: 0.75 mm (0.0295 in)**
**Oil ring**
**0.30 ~ 0.90 mm**
**(0.0118 ~ 0.0354 in)**

### CHECKING THE PISTON PIN

1. Check:
   - piston pin
     Blue discoloration/grooves → Replace, then check the lubrication system.
2. Measure:
   - piston pin-to-piston clearance

▼▼▼▼▼▼▼▼▼▼▼▼▼▼▼▼▼▼▼▼▼▼▼▼▼▼▼▼▼▼▼▼▼▼

a. Measure the piston pin outside diameter ⓐ.
   If out of specification, replace the piston pin.

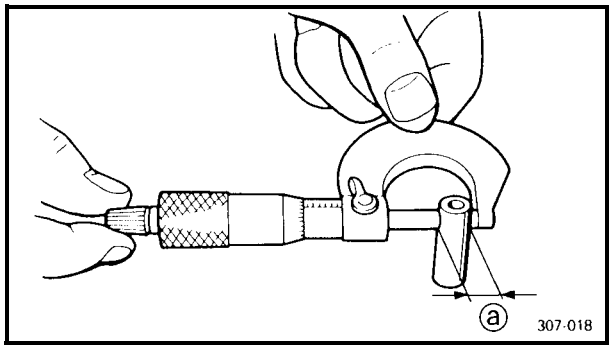


**Piston pin outside diameter**
**18.990 ~ 18.995 mm**
**(0.7476 ~ 0.7478 in)**
**<Limit>: 18.970 mm (0.7470 in)**

b. Measure the piston pin bore inside diameter ⓑ.

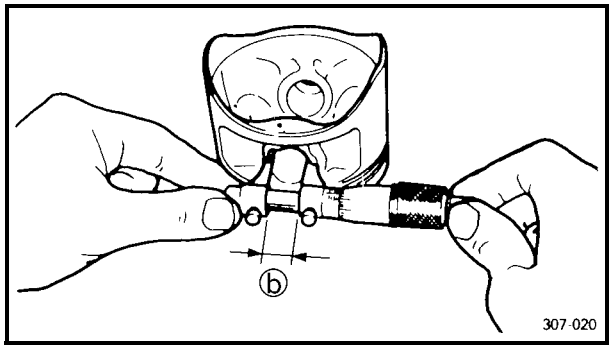


**Piston pin bore inside diameter**
**19.004 ~ 19.015 mm**
**(0.7482 ~ 0.7486 in)**
**<Limit>: 19.045 mm (0.7498 in)**

c. Calculate the piston pin-to-piston clearance with the following formula.

**Piston pin-to-piston clearance =**
**Piston pin bore inside diameter ⓑ –**
**Piston pin outside diameter ⓐ**

d. If out of specification, replace the piston.

**Piston pin-to-piston clearance**
**0.009 ~ 0.025 mm**
**(0.00035 ~ 0.00098 in)**
**<Limit>: 0.075 mm (0.00295 in)**

▲▲▲▲▲▲▲▲▲▲▲▲▲▲▲▲▲▲▲▲▲▲▲▲▲▲▲▲▲▲▲▲▲▲

EBS00252

### INSTALLING THE PISTON AND CYLINDER

1. Install:
   - top ring ①
   - 2nd ring ②
   - oil ring expander ③
   - lower oil ring rail ④
   - upper oil ring rail ⑤

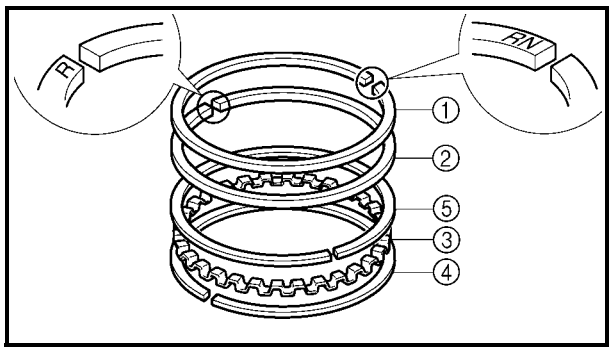


**NOTE:**
Be sure to install the piston rings so that the manufacturer marks or numbers face up.

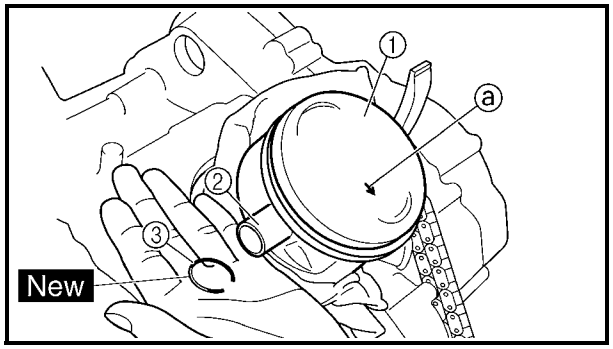


2. Install:
   - piston ①
   - piston pin ②
   - piston pin clips ③ New

**NOTE:**
- Apply engine oil to the piston pin.
- Make sure the punch mark ⓐ on the piston points towards the exhaust side of the cylinder.
- Before installing the piston pin clips, cover the crankcase opening with a clean rag to prevent the clips from falling into the crankcase.

3. Install:
   - cylinder gasket New
   - dowel pins
4. Lubricate:
   - piston
   - piston rings
   - cylinder
     (with the recommended lubricant)

| | |
|---|---|
| | **Recommended lubricant**<br>**Engine oil** |

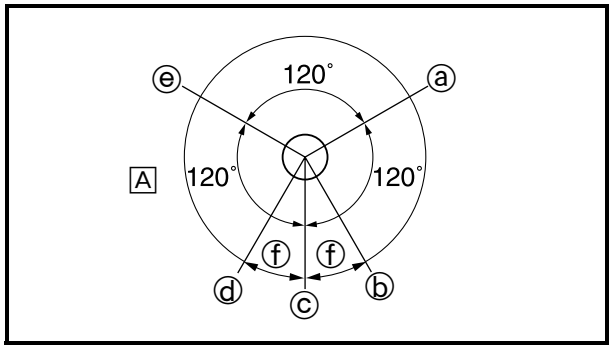


5. Offset:
   - piston ring end gaps

ⓐ Top ring
ⓑ Upper oil ring rail
ⓒ Oil ring expander
ⓓ Lower oil ring rail
ⓔ 2nd ring
ⓕ 20 mm (0.79 in)
A Exhaust side

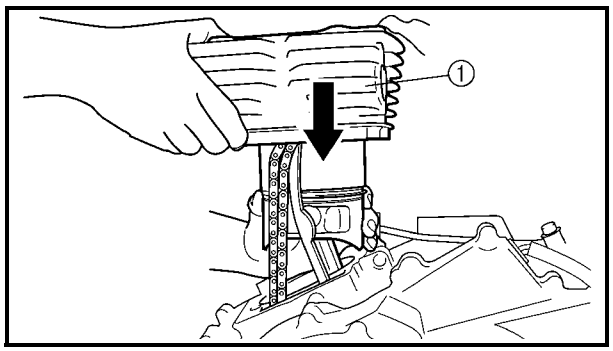


6. Install:
   - cylinder ①
   - timing chain guide (exhaust side)

**NOTE:**
- While compressing the piston rings with one hand, install the cylinder with the other hand.
- Pass the timing chain and timing chain guide (exhaust side) through the timing chain cavity.

## RECOIL STARTER AND AC MAGNETO ROTOR

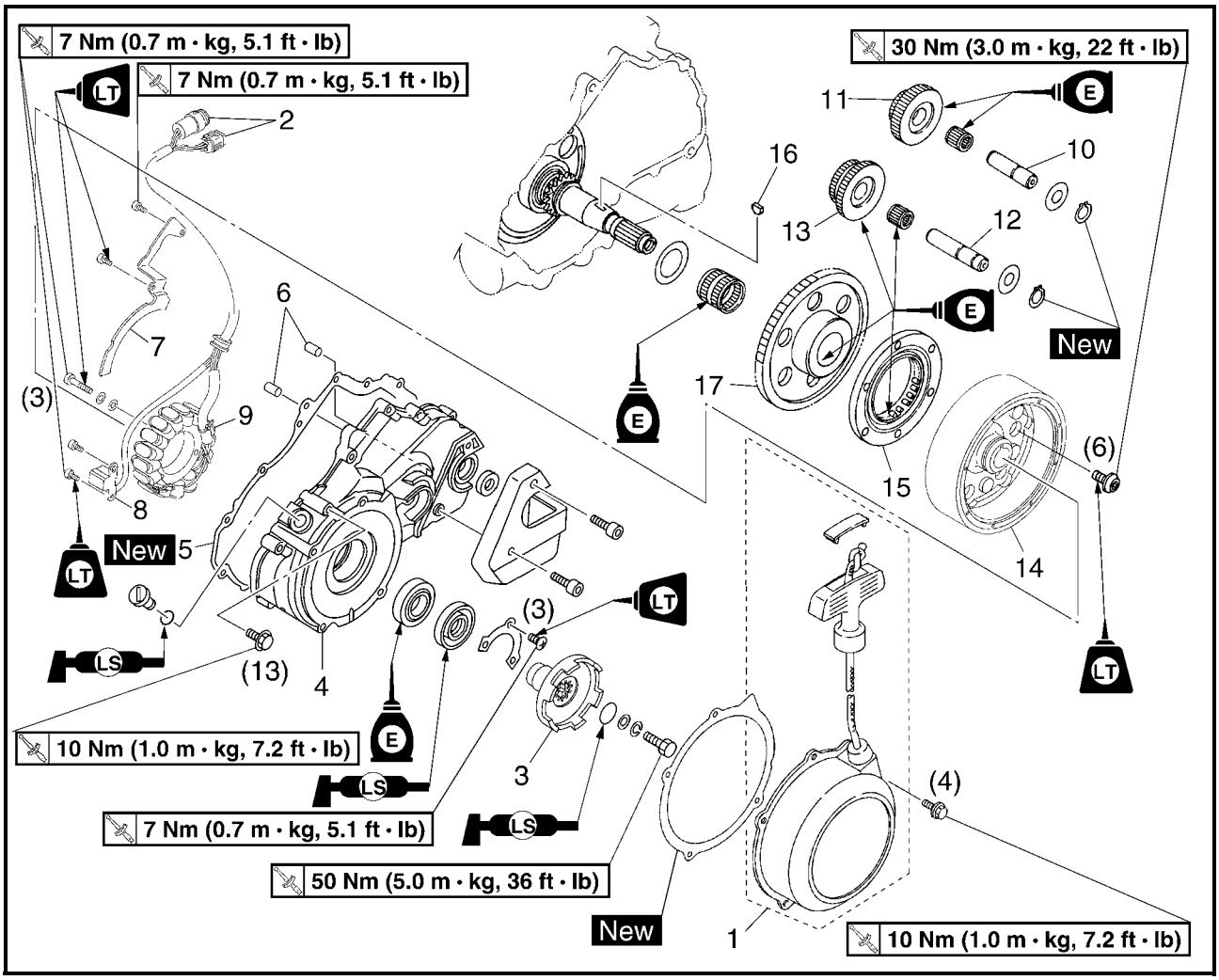


| Order | Job/Part | Q'ty | Remarks |
|---|---|---|---|
| | **Removing the recoil starter and AC magneto rotor** | | Remove the parts in the order listed. |
| | Engine oil | | Drain.<br>Refer to "CHANGING THE ENGINE OIL" in chapter 3. |
| | Seat/fuel tank/rear fender | | Refer to "SEAT, CARRIERS, FENDERS, FUEL TANK AND AIR FILTER" in chapter 3. |
| | Left footrest board/shift pedal assembly | | Refer to "FOOTREST BOARDS" in chapter 3. |
| 1 | Recoil starter assembly | 1 | |
| 2 | AC magneto coupler | 2 | Disconnect. |
| 3 | Starter pulley | 1 | Refer to "REMOVING THE AC MAGNETO ROTOR" and "INSTALLING THE AC MAGNETO ROTOR". |
| 4 | AC magneto cover | 1 | |
| 5 | AC magneto cover gasket | 1 | |

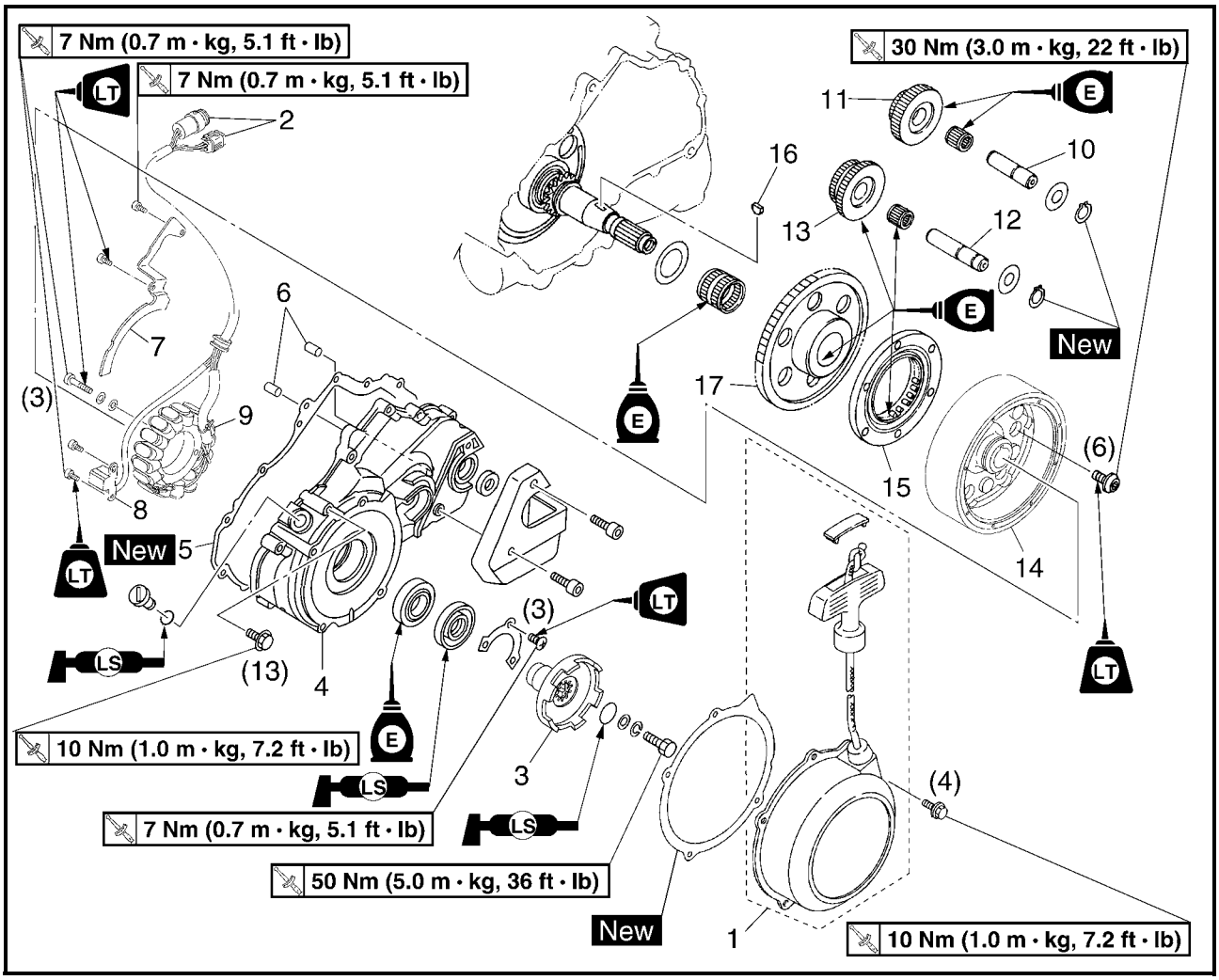


| Order | Job/Part | Q'ty | Remarks |
|---|---|---|---|
| 6 | Dowel pin | 2 | |
| 7 | Lead holder | 1 | |
| 8 | Pickup coil | 1 | |
| 9 | Stator coil | 1 | |
| 10 | Starter idle gear shaft 1 | 1 | |
| 11 | Starter idle gear 1 | 1 | |
| 12 | Starter idle gear shaft 2 | 1 | |
| 13 | Starter idle gear 2 | 1 | |
| 14 | AC magneto rotor | 1 | Refer to "REMOVING THE AC MAGNETO ROTOR" and "INSTALLING THE AC MAGNETO ROTOR". |
| 15 | Starter clutch | 1 | |
| 16 | Woodruff key | 1 | Refer to "INSTALLING THE AC MAGNETO ROTOR". |

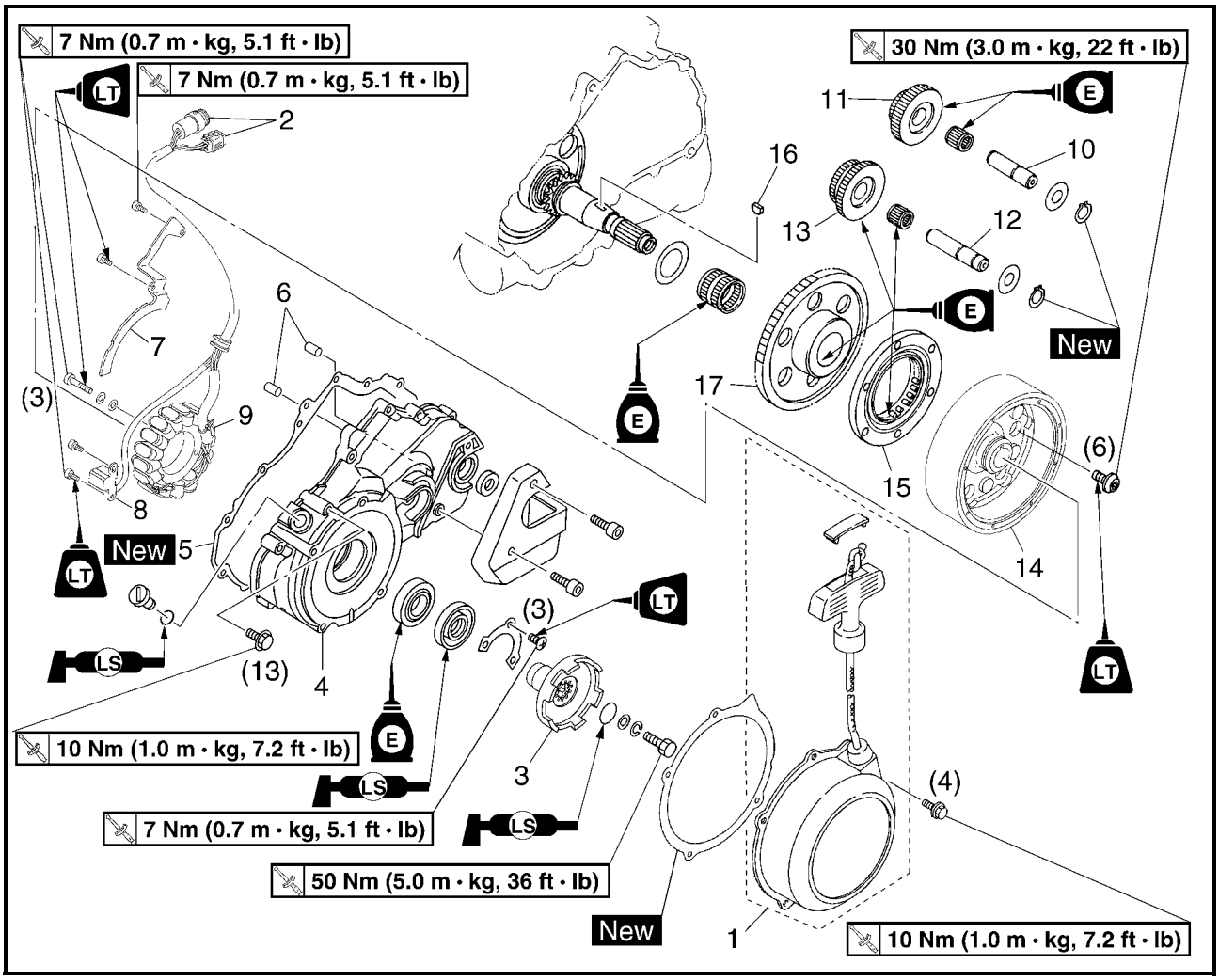


| Order | Job/Part | Q'ty | Remarks |
|---|---|---|---|
| 17 | Starter wheel gear | 1 | For installation, reverse the removal procedure. |

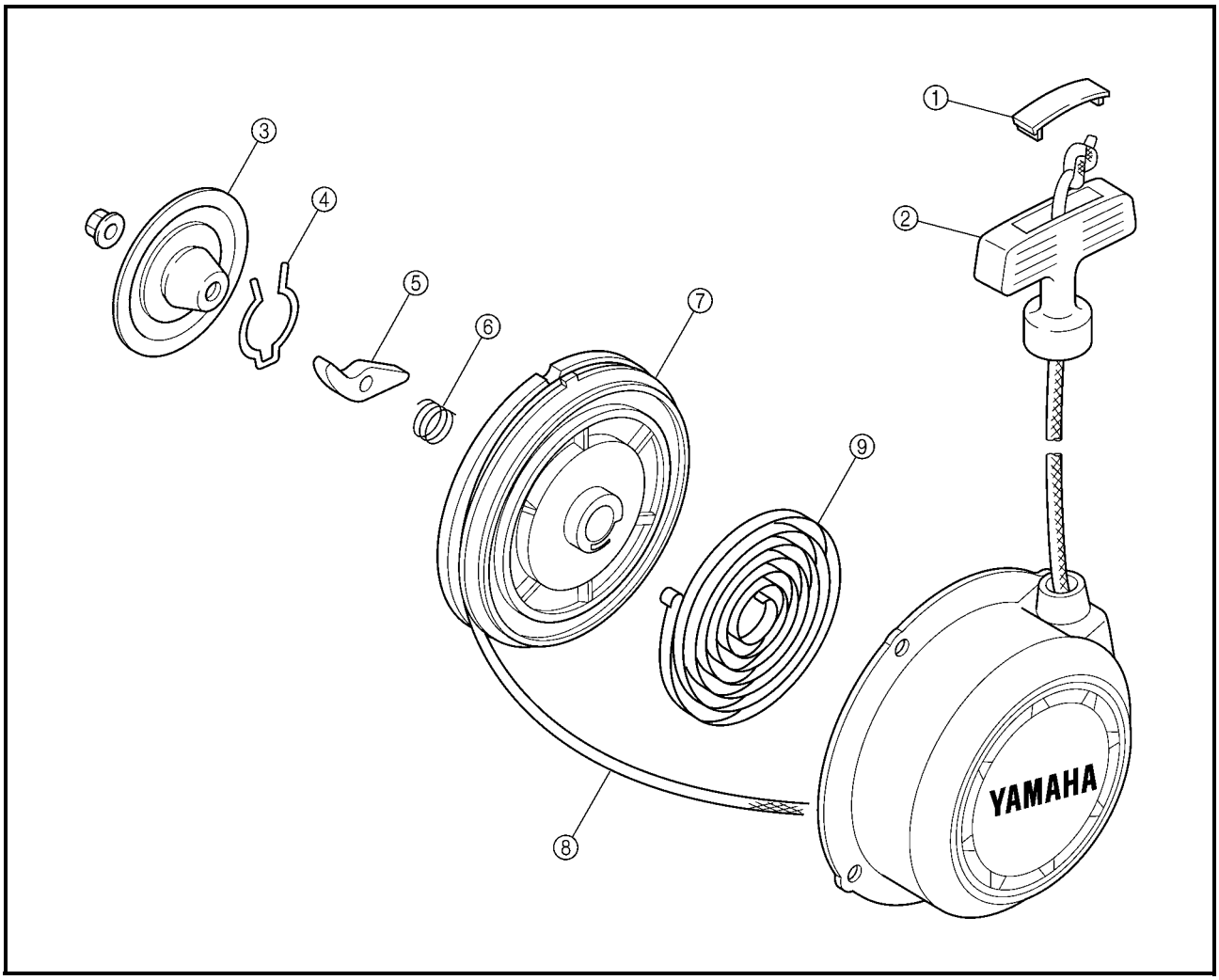


| Order | Job/Part | Q'ty | Remarks |
|---|---|---|---|
| | **Disassembling the recoil starter and AC magneto rotor** | | Remove the parts in the order listed. |
| ① | Starter handle cap | 1 | Refer to "DISASSEMBLING THE RECOIL STARTER" and "ASSEMBLING THE RECOIL STARTER". |
| ② | Starter handle | 1 | |
| ③ | Friction plate | 1 | |
| ④ | Pawl spring | 1 | |
| ⑤ | Drive pawl | 1 | |
| ⑥ | Spring | 1 | |
| ⑦ | Sheave drum | 1 | |
| ⑧ | Rope | 1 | |
| ⑨ | Starter spring | 1 | |
| | | | For assembly, reverse the disassembly procedure. |

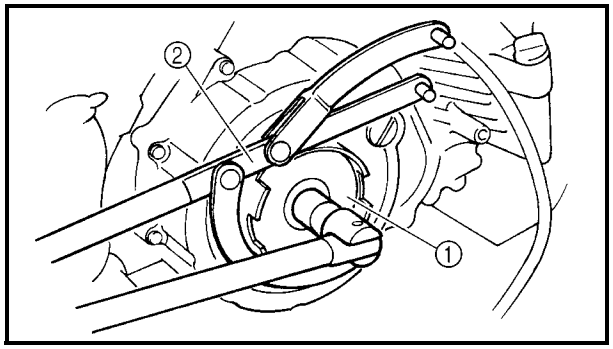


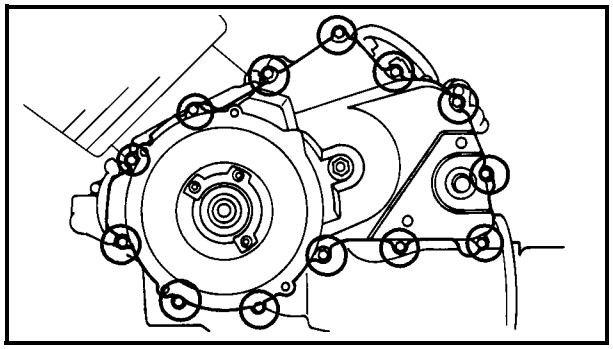

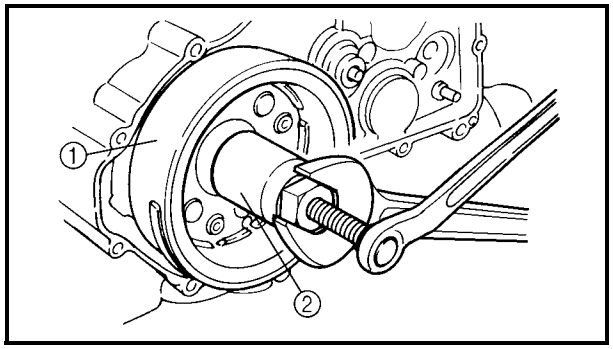


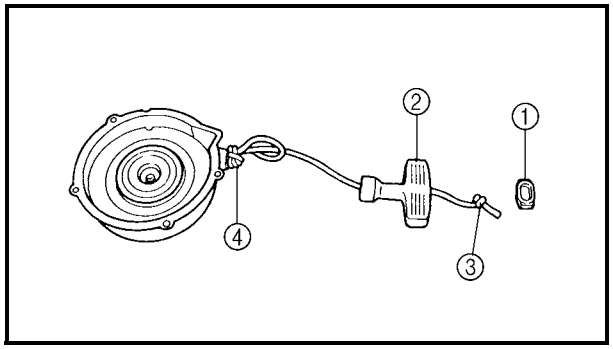


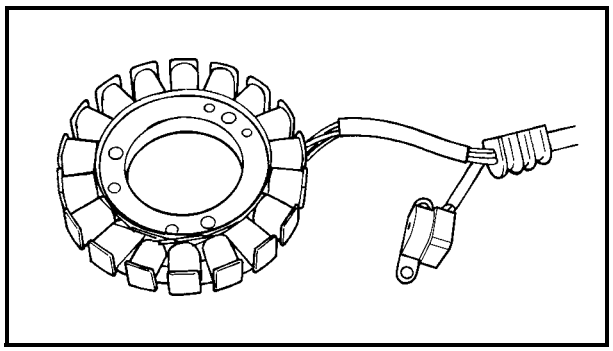

### REMOVING THE AC MAGNETO ROTOR

1. Remove:
   - starter pulley ①

**NOTE:**
Hold the starter pulley with the rotor holding tool ② while loosening the starter pulley bolt.

**Rotor holding tool**
**90890-01235**
**Universal magneto & rotor holder**
**YU-01235**

2. Remove:
   - AC magneto cover

**NOTE:**
Loosen each bolt 1/4 of a turn at a time, in stages and in a crisscross pattern. After all of the bolts are fully loosened, remove them.

3. Remove:
   - AC magneto rotor ①

**NOTE:**
Use the flywheel puller ②.

**Flywheel puller**
**90890-01404, YM-01404**

### DISASSEMBLING THE RECOIL STARTER

1. Remove:
   - starter handle cap ①
   - starter handle ②

**NOTE:**
Before untying the knot ③ above the starter handle, make a knot ④ in the rope so that the rope is not pulled into the case.

### CHECKING THE STATOR COIL AND PICKUP COIL

1. Check:
   - stator coil
   - pickup coil
     Damage → Replace the pickup coil/stator assembly.

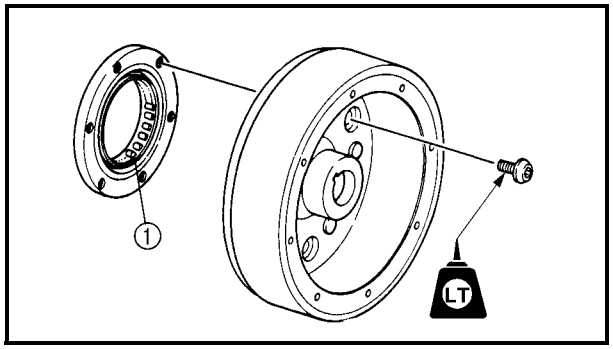


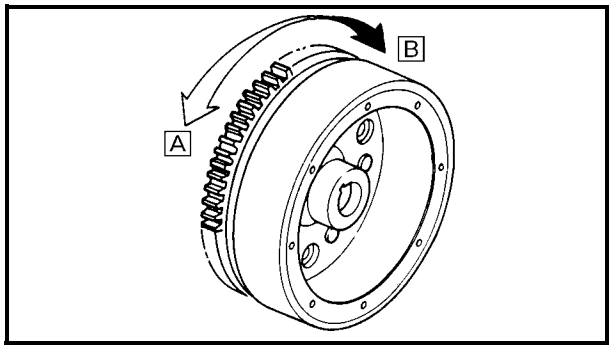


**CHECKING THE STARTER CLUTCH**

1. Check:
   - starter one-way clutch ①
     Cracks/damage → Replace.

**NOTE:**

The arrow mark on the starter clutch must face inward, away from the AC magneto rotor.

| | |
|---|---|
| | **Starter clutch bolt**<br>**30 Nm (3.0 m · kg, 22 ft · lb)**<br>**LOCTITE®** |

▼▼▼▼▼▼▼▼▼▼▼▼▼▼▼▼▼▼▼▼▼▼▼▼▼▼▼▼▼▼▼▼▼▼

a. Install the starter wheel gear to the starter clutch, and hold the AC magneto rotor.
b. When turning the starter wheel gear counterclockwise [A], the starter clutch and the wheel gear should be engaged.
   If not, the starter clutch is faulty, and needs to be replaced.
c. When turning the starter wheel gear clockwise [B], the starter wheel gear should turn freely.
   If not, the starter clutch is faulty, and needs to be replaced.

▲▲▲▲▲▲▲▲▲▲▲▲▲▲▲▲▲▲▲▲▲▲▲▲▲▲▲▲▲▲▲▲▲▲

2. Check:
   - starter idle gear teeth
   - starter wheel gear teeth
     Burrs/chips/roughness/wear → Replace.
3. Check:
   - starter wheel gear
     (contacting surface)
     Damage/pitting/wear → Replace.

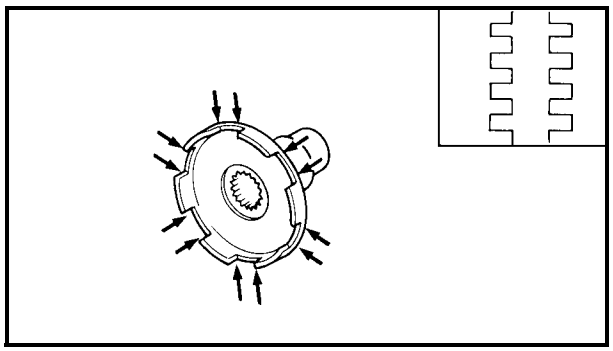

**CHECKING THE STARTER PULLEY**

1. Check:
   - starter pulley
     Cracks/pitting → Deburr or replace.

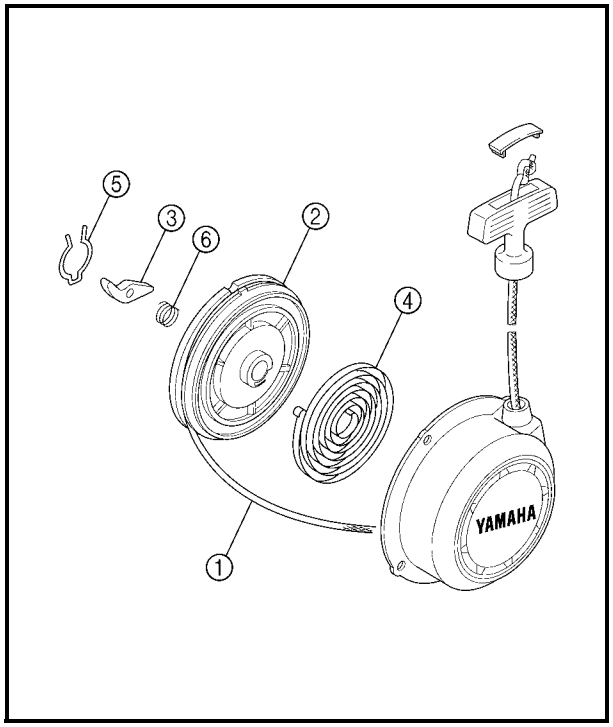


### CHECKING THE RECOIL STARTER

1. Check:
   - rope ①
   - sheave drum ②
   - drive pawl ③
     Wear/damage → Replace.
   - coil spring ④
   - pawl spring ⑤
   - spring ⑥
     Fatigue → Replace.

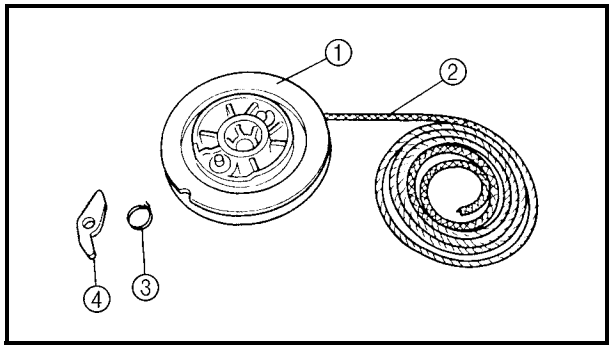


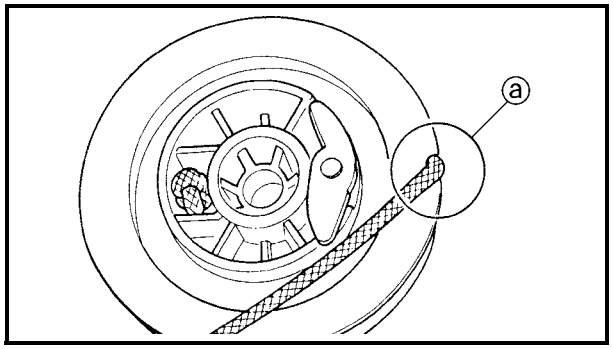


### ASSEMBLING THE RECOIL STARTER

1. Install:
   - sheave drum ①
   - rope ②
   - pawl spring ③
   - drive pawl ④

**NOTE:**

Wind the rope 4-1/2 turns clockwise around the sheave drum. Then insert the rope into the drum slit ⓐ.

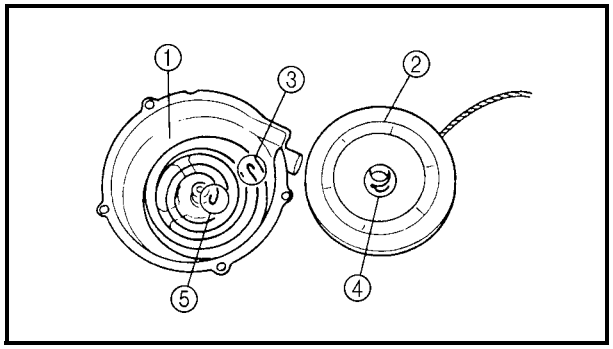


2. Install:
   - starter spring ①
   - sheave drum assembly ②

**NOTE:**
- Mesh the spring hook ③ with the case slit, then wind the spring clockwise into the case from the larger to smaller diameter.
- Mesh the sheave drum hook ④ with the spring hook ⑤.

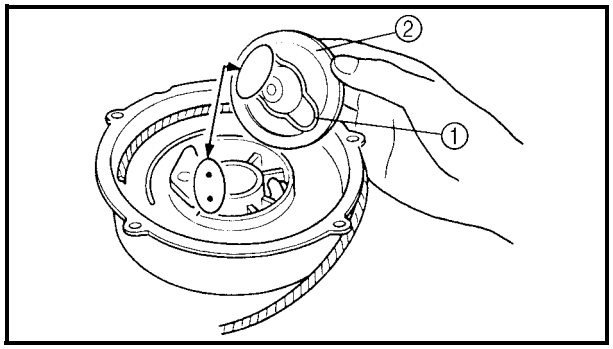


3. Install:
   - pawl spring ①
   - friction plate ②
   - nut

**NOTE:**
Insert the spring hooks into the pawl side holes.

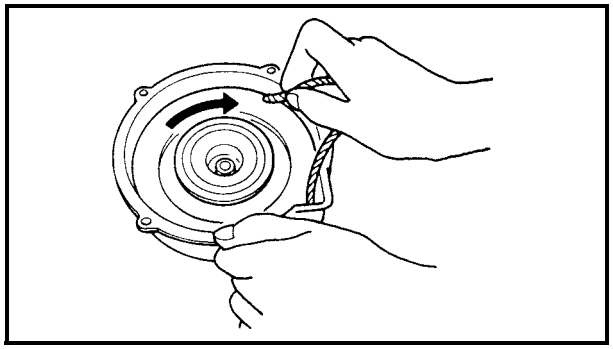

4. Turn the sheave drum 3-turn clockwise to give preload to the spring.

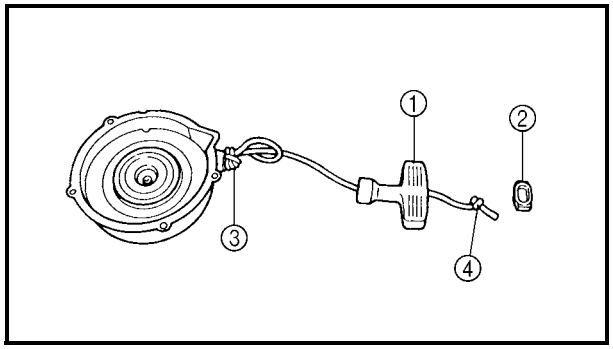


5. Install:
   - starter handle ①
   - starter handle cap ②

**NOTE:**
- Pass the rope through the case hole and make a knot ③ on the rope so that the rope is not pulled into the case.
- Untie the knot ③ after making a knot ④ above the handle.

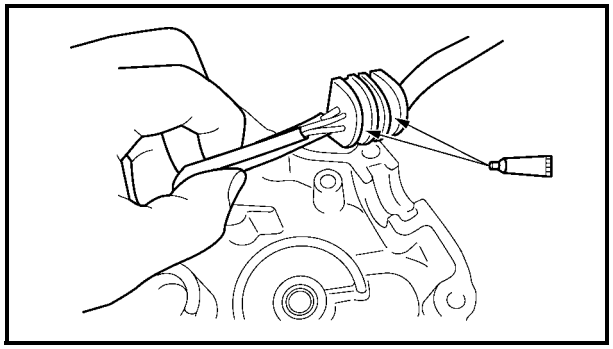

### INSTALLING THE AC MAGNETO ROTOR

1. Apply:
   - Yamaha bond No. 1215
     (Three bond No.1215®)
     (into the slit)

**Yamaha bond No. 1215**
**90890-85505**
**(Three bond No.1215®)**

2. Install:
   - woodruff key
   - AC magneto rotor

**NOTE:**
- Before installing the rotor, clean the outside of the crankshaft and the inside of the rotor.
- After installing the rotor, check that the rotor rotates smoothly. If not, reinstall the key and rotor.

3. Install:
   - gasket New
   - AC magneto cover

**10 Nm (1.0 m · kg, 7.2 ft · lb)**

**NOTE:**
- When installing the AC magneto cover, use a long rod to hold the rotor in position from the outside. This will make assembly easier. Be careful not to damage the oil seal.
- Tighten the crankcase cover bolts in stages, using a crisscross pattern.

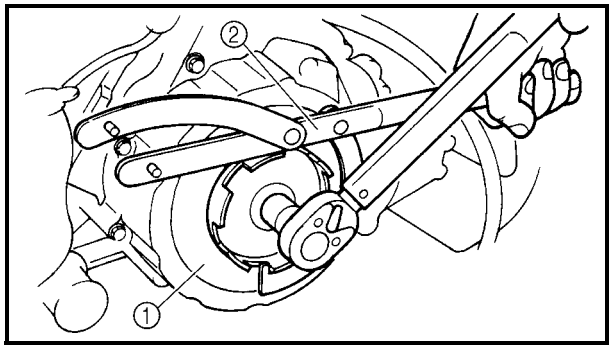


4. Install:
   - starter pulley ①

**50 Nm (5.0 m · kg, 36 ft · lb)**

**NOTE:**
- Before installing the starter pulley, do not forget to install the O-ring.
- Hold the starter pulley with the rotor holding tool ② while tightening the starter pulley bolt.

**Rotor holding tool**
**90890-01235**
**Universal magneto & rotor holder**
**YU-01235**

## SHIFT SHAFT

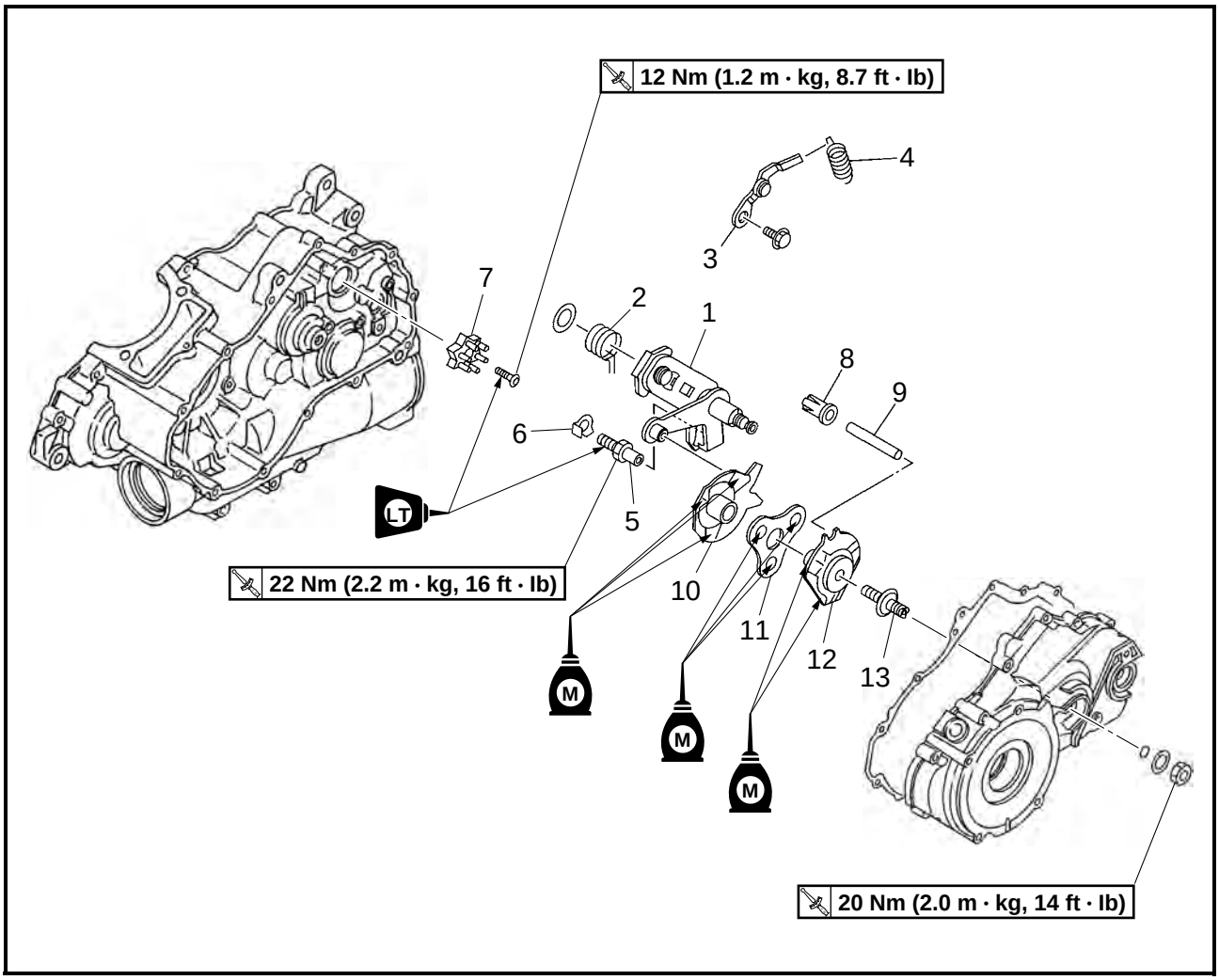


| Order | Job/Part | Q'ty | Remarks |
|---|---|---|---|
| | **Removing the shift shaft** | | Remove the parts in the order listed. |
| | Left footrest board/shift pedal assembly | | Refer to "FOOTREST BOARDS" in chapter 3. |
| | AC magneto cover | | Refer to "REMOVING THE AC MAGNETO ROTOR" and "INSTALLING THE AC MAGNETO ROTOR". |
| 1 | Shift shaft | 1 | Refer to "INSTALLING THE SHIFT SHAFT". |
| 2 | Shift shaft spring | 1 | |
| 3 | Stopper lever | 1 | |
| 4 | Stopper lever spring | 1 | |
| 5 | Stopper bolt | 1 | |
| 6 | Lock washer | 1 | |
| 7 | Shift drum segment | 1 | |

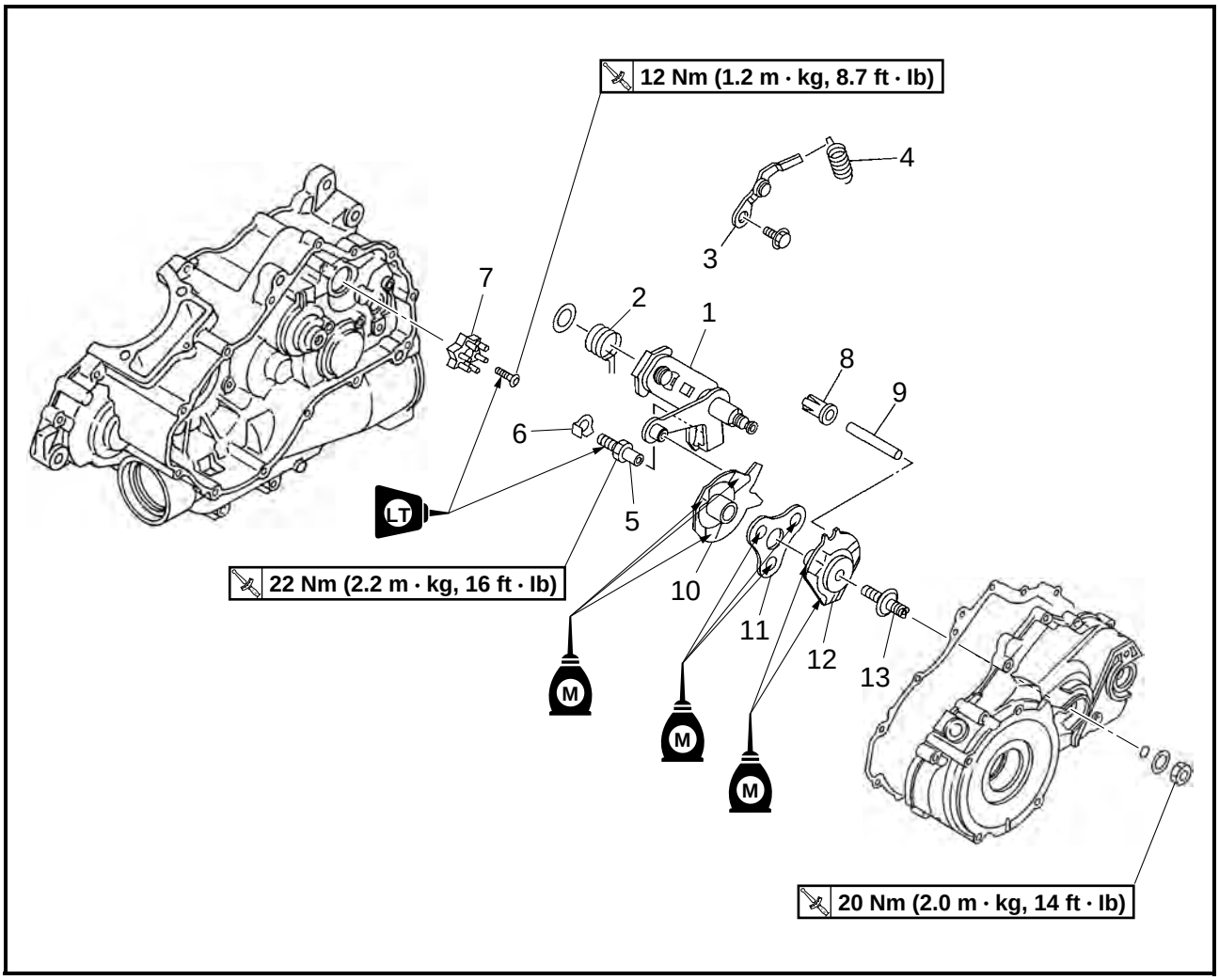


| Order | Job/Part | Q'ty | Remarks |
|---|---|---|---|
| 8 | Stopper collar | 1 | Refer to "INSTALLING THE SHIFT SHAFT". |
| 9 | Shift guide bar | 1 | |
| 10 | Shift guide #1 | 1 | |
| 11 | Pawl holder | 1 | |
| 12 | Shift guide #2 | 1 | |
| 13 | Adjuster | 1 | |
| | | | For installation, reverse the removal procedure. |

EBS01018

## CHECKING THE SHIFT SHAFT

1. Check:
   - shift shaft
     Bends/damage/wear → Replace.
   - shift shaft spring
     Damage/wear → Replace.

EBS01019

## CHECKING THE STOPPER LEVER

1. Check:
   - stopper lever
     Bends/damage → Replace.
     Roller turns roughly → Replace the stopper lever.
   - stopper lever spring
     Damage/wear → Replace.

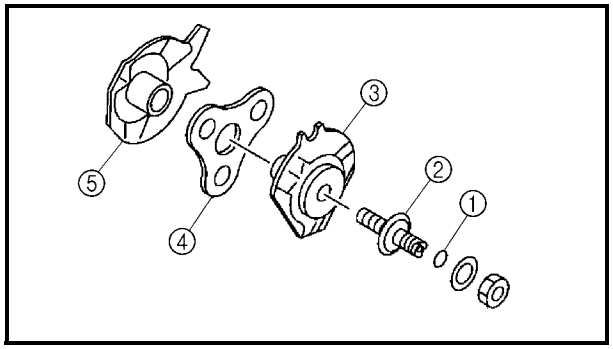


EBS00359

## CHECKING THE SHIFT GUIDES

1. Check:
   - O-ring ①
   - adjuster ②
   - shift guide #2 ③
   - pawl holder ④
   - shift guide #1 ⑤
     Wear/cracks/damage → Replace.

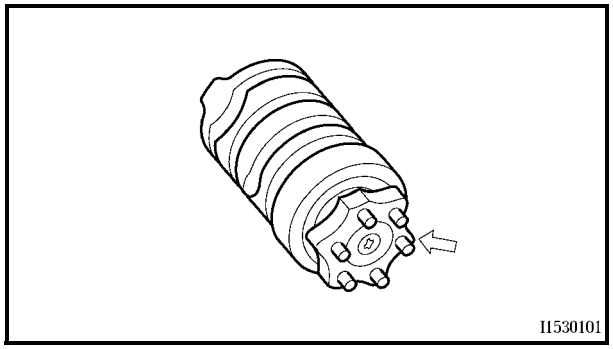


## CHECKING THE SHIFT DRUM SEGMENT

1. Check:
   - shift drum segment
     Damage/wear → Replace.

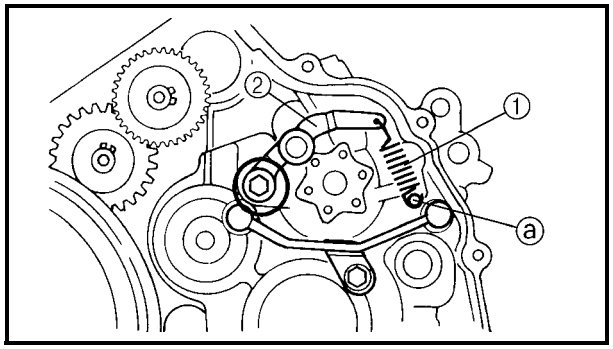


**INSTALLING THE SHIFT SHAFT**

1. Install:
   - O-rings
   - stopper lever spring ①
   - stopper lever ②

LT | 22 Nm (2.2 m · kg, 17 ft · lb)

**NOTE:**
- Hook the spring ends on the stopper lever ② and crankcase boss ⓐ.
- Mesh the stopper lever ② with the shift cam stopper.

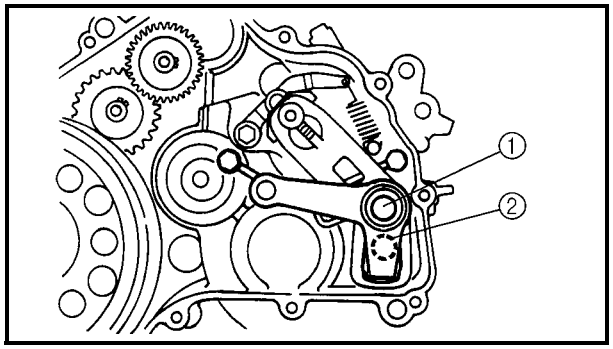


2. Install:
   - washer
   - shift shaft assembly ①

**NOTE:**
Hook the spring ends onto the stopper ②.

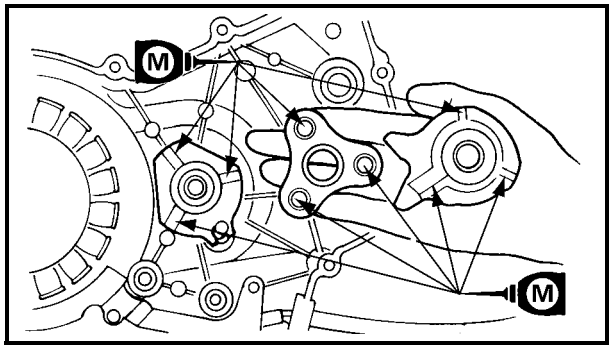


3. Apply:
   - molybdenum disulfide oil (to shift guide)

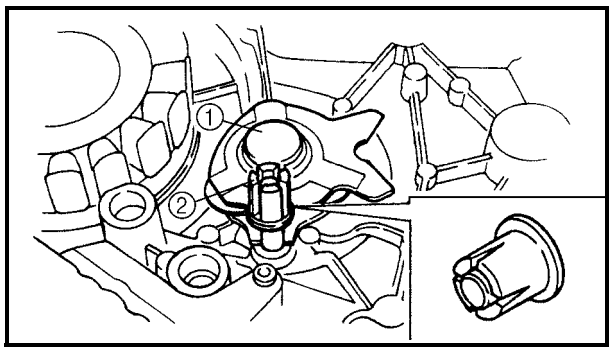


4. Install:
   - shift guide assembly ①
   - stopper collar ②

**NOTE:**
Install the shift guide bar in the stopper collar as shown in the illustration, so that the tip of the bar protrudes from the stopper collar.

5. Adjust:
   - clutch release
     Refer to “ADJUSTING THE CLUTCH RELEASE” in chapter 3.

## CLUTCH

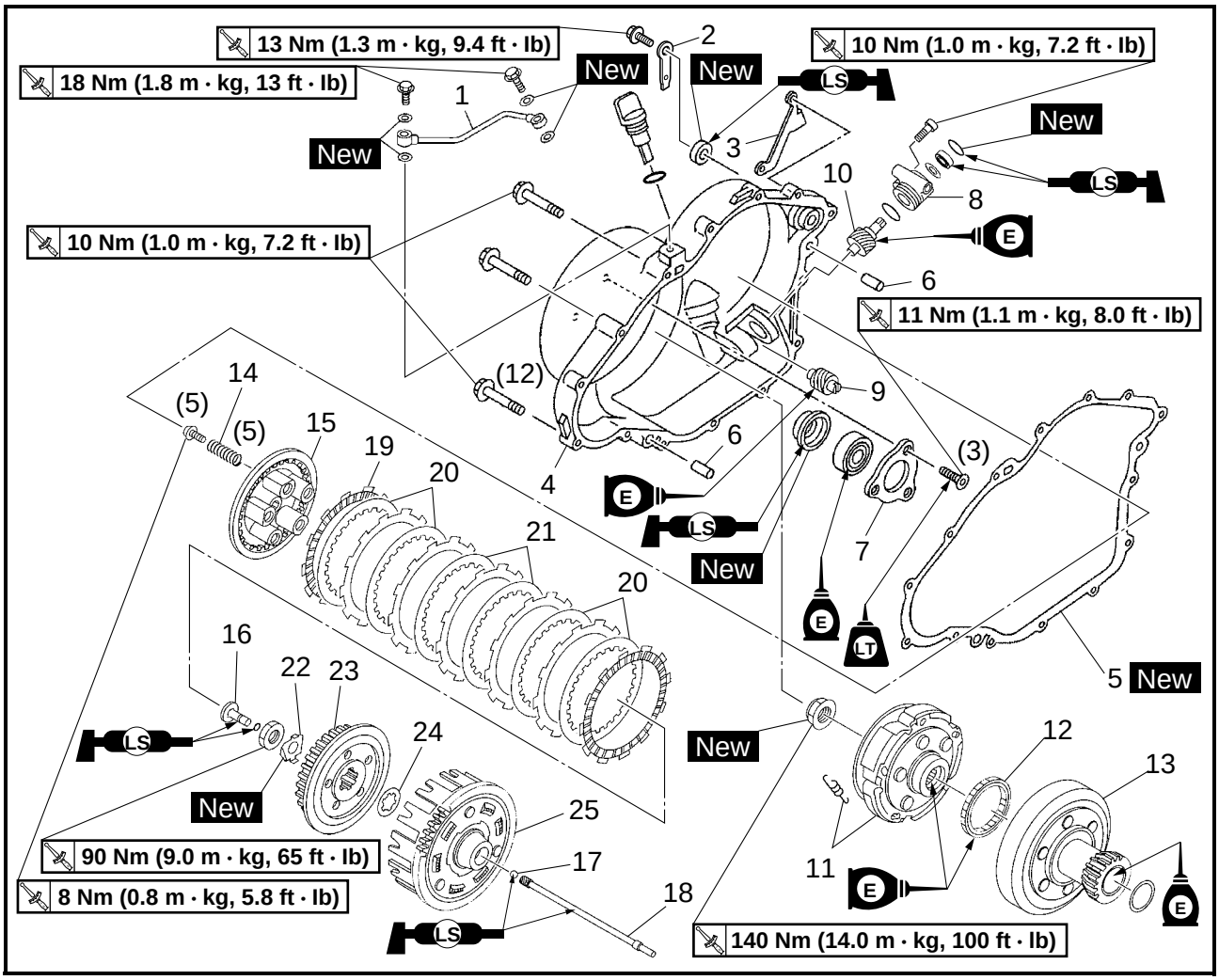


| Order | Job/Part | Q'ty | Remarks |
|---|---|---|---|
| | **Removing the clutch** | | Remove the parts in the order listed. |
| | Engine oil | | Drain.<br>Refer to "CHANGING THE ENGINE OIL" in chapter 3. |
| | Right footrest board | | Refer to "FOOTREST BOARDS" in chapter 3. |
| | Reverse control cable | | Refer to "ENGINE REMOVAL". |
| 1 | Oil delivery pipe 2 | 1 | |
| 2 | Reverse control lever | 1 | |
| 3 | Reverse control cable holder | 1 | |
| 4 | Clutch cover | 1 | |
| 5 | Clutch cover gasket | 1 | |
| 6 | Dowel pin | 2 | |
| 7 | Bearing retainer | 1 | |
| 8 | Speedometer gear housing | 1 | |

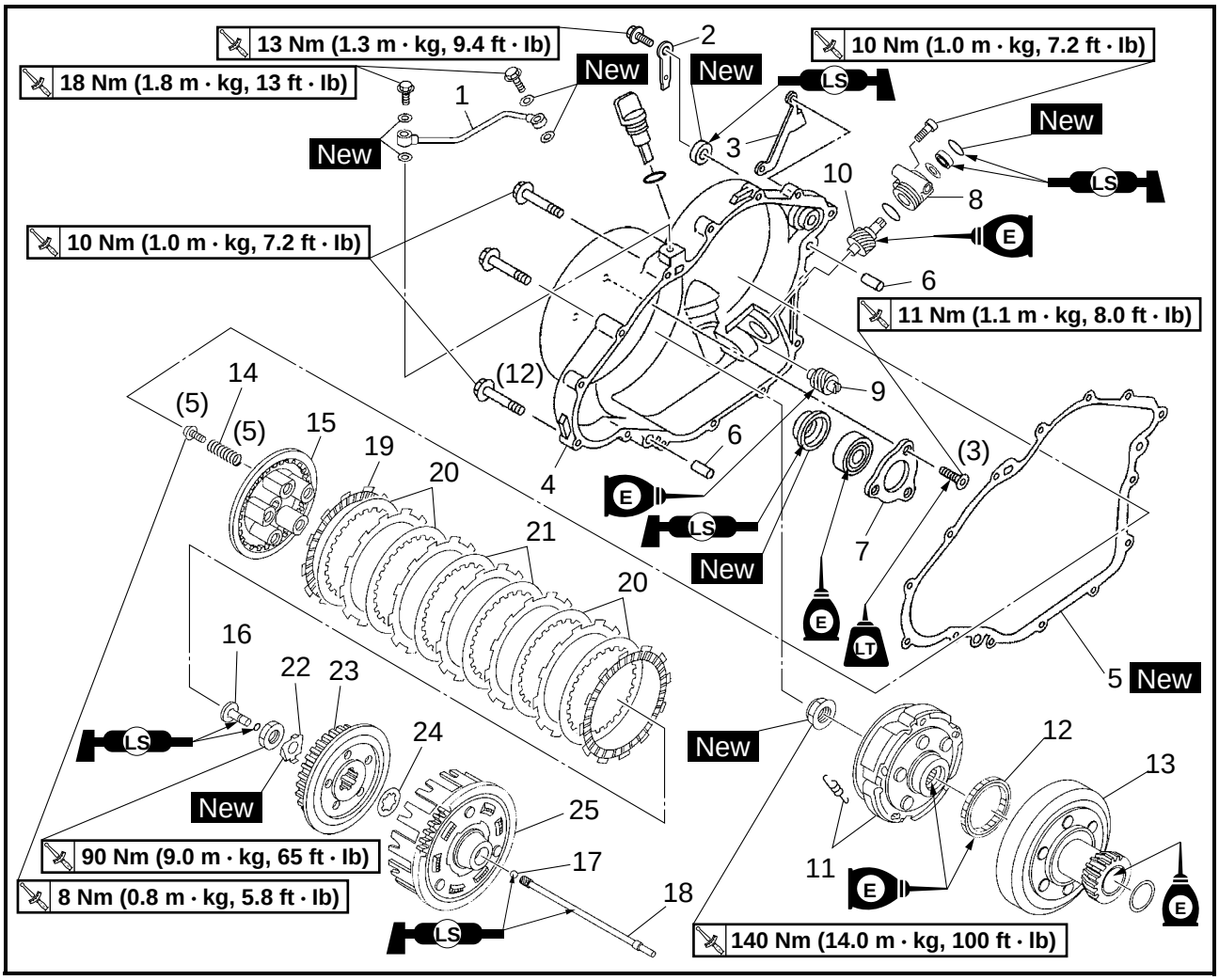


| Order | Job/Part | Q'ty | Remarks |
|---|---|---|---|
| 9 | Speedometer drive gear | 1 | |
| 10 | Speedometer driven gear | 1 | |
| 11 | Clutch carrier assembly | 1 | |
| 12 | One-way clutch bearing | 1 | |
| 13 | Primary clutch housing | 1 | |
| 14 | Clutch spring | 5 | |
| 15 | Pressure plate | 1 | |
| 16 | Short push rod | 1 | |
| 17 | Ball | 1 | |
| 18 | Long push rod | 1 | |
| 19 | Friction plate | 7 | |
| 20 | Clutch plate 2 | 4 | Thickness: 1.6 mm (0.063 in) |
| 21 | Clutch plate 1 | 2 | Thickness: 2.0 mm (0.079 in) |
| 22 | Lock washer | 1 | |
| 23 | Clutch boss | 1 | |

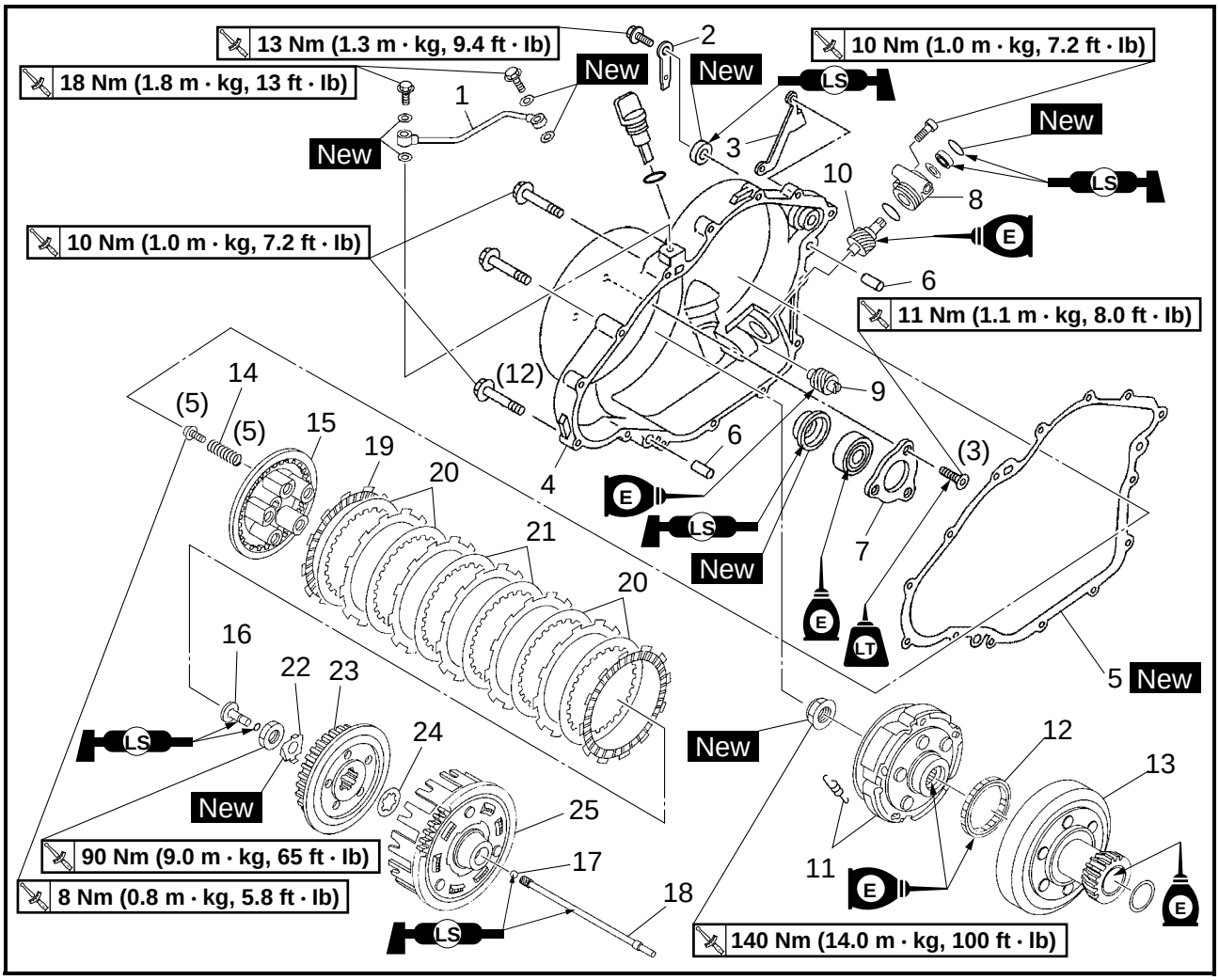


| Order | Job/Part | Q'ty | Remarks |
|---|---|---|---|
| 24 | Thrust washer | 1 | |
| 25 | Secondary clutch housing | 1 | |
| | | | For installation, reverse the removal procedure. |

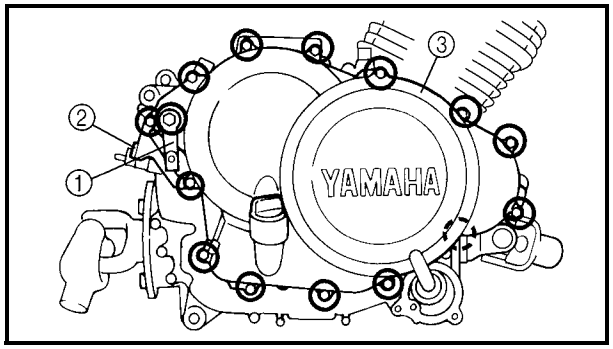


EBS00297

**REMOVING THE CLUTCH**

1. Remove:
   - reverse control lever ①
   - reverse control cable holder ②
   - clutch cover ③

**NOTE:**

Loosen each bolt 1/4 of a turn at a time, in stages and in a crisscross pattern. After all of the bolts are fully loosened, remove them.

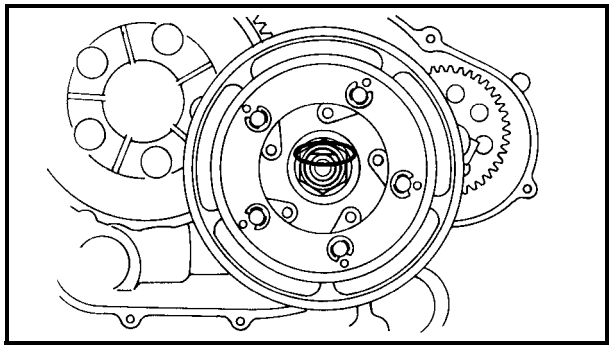

2. Straighten the clutch carrier assembly nut staked point.

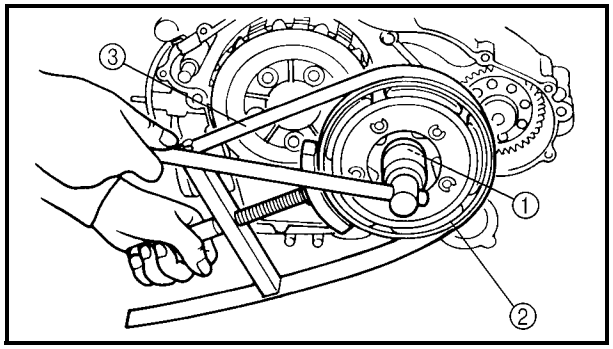


3. Loosen:
   - clutch carrier assembly nut ①

**NOTE:**

Hold the primary clutch housing ② with the sheave holder ③ while loosening the clutch carrier assembly nut.

**Sheave holder**
**90890-01701**
**Primary clutch holder**
**YS-01880-A**

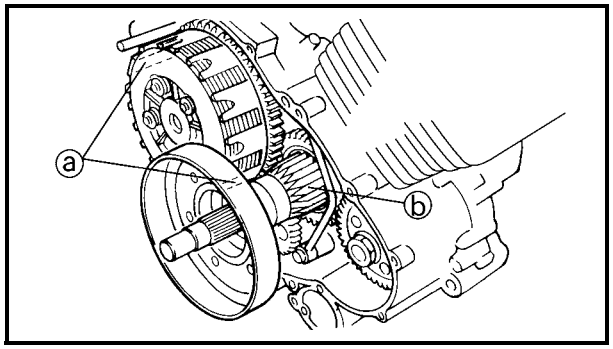


4. Remove:
   - clutch carrier assembly ①
   - one-way clutch bearing ②
   - primary clutch housing ③
   - washer ④

**NOTE:**
When removing the primary clutch housing, align the indentations in the secondary clutch housing ⓐ and the primary gear ⓑ with each other.

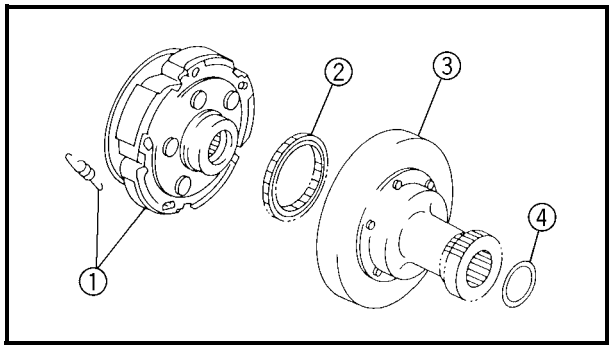


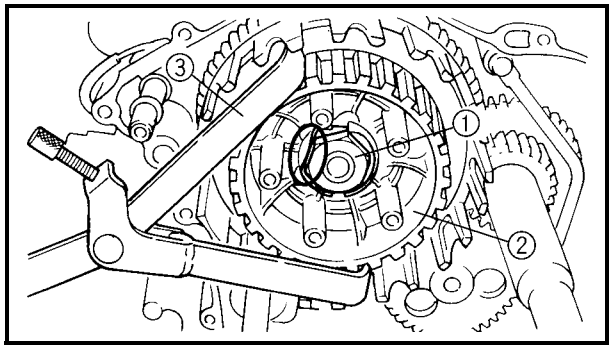


5. Straighten the lock washer tab.
6. Loosen:
   - clutch boss nut ①

**NOTE:**
While holding the clutch boss ② with the universal clutch holder ③, loosen the clutch boss nut.

| | |
|---|---|
| | **Universal clutch holder 90890-04086, YM-91042** |

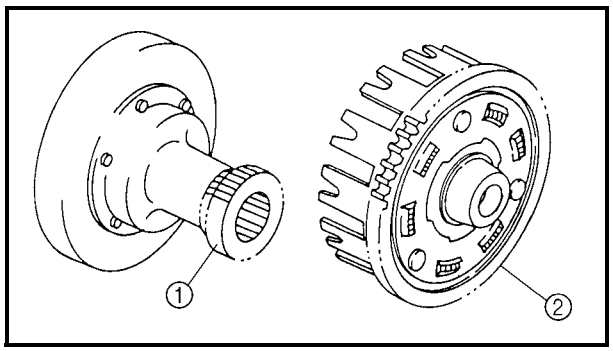


**CHECKING THE PRIMARY CLUTCH**

1. Check:
   - primary drive gear teeth ①
   - primary driven gear teeth ②
     Wear/damage → Replace both gears.
     Excessive noise during operation → Replace both gears.

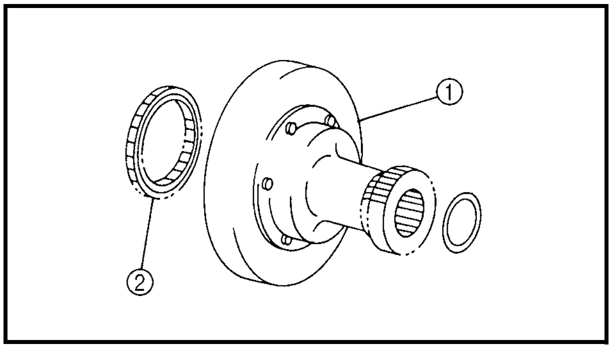


2. Check:
   • primary clutch housing ①
   Heat damage/wear/damage → Replace.
   • one-way clutch bearing ②
   Chafing/wear/damage → Replace.

**NOTE:**
• Replace the one-way clutch assembly and clutch housing as a set.
• The one-way clutch bearing must be installed with the flange side facing in.

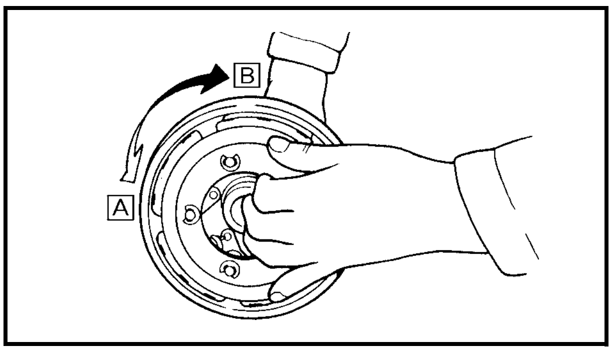


3. Check:
   • one-way clutch operation

▼▼▼▼▼▼▼▼▼▼▼▼▼▼▼▼▼▼▼▼▼▼▼▼▼▼▼▼▼▼▼▼▼▼

a. Install the one-way clutch bearing and clutch carrier assembly to the primary clutch housing, and then hold the clutch carrier assembly.
b. When turning the primary clutch housing counterclockwise [A], the primary clutch housing should turn freely.
   If not, the one-way clutch assembly is faulty.
   Replace it.
c. When turning the primary clutch housing clockwise [B], the primary clutch housing and crankshaft should be engaged.
   If not, the one-way clutch assembly is faulty.
   Replace it.

▲▲▲▲▲▲▲▲▲▲▲▲▲▲▲▲▲▲▲▲▲▲▲▲▲▲▲▲▲▲▲▲▲▲

4. Check:
   • clutch shoe
   Heat damage → Replace.

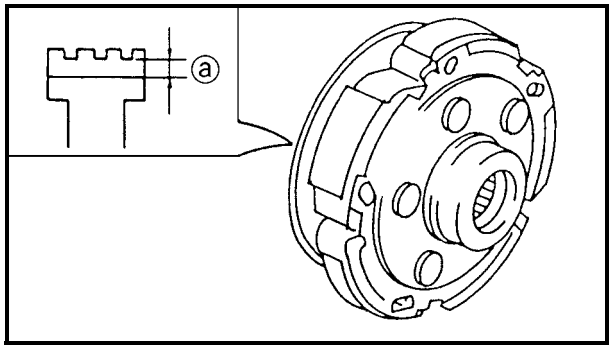


5. Measure:
   - clutch shoe thickness
     Out of specification → Replace.

| |
|---|
| **Clutch shoe thickness**<br>**2.0 mm (0.08 in)**<br>**Clutch shoe wear limit ⓐ**<br>**1.5 mm (0.06 in)** |

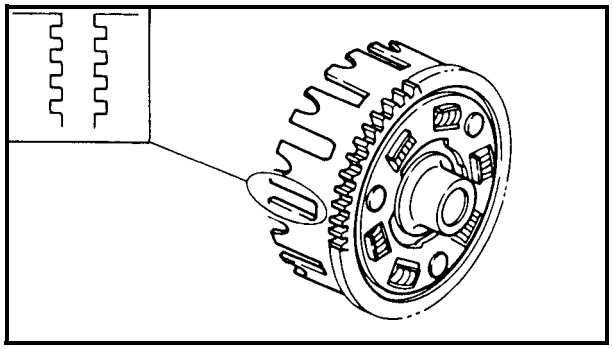

EBS00303

## CHECKING THE SECONDARY CLUTCH

1. Check:
   - clutch housing dogs
     Damage/pitting/wear → Deburr the clutch housing dogs or replace the clutch housing.

**NOTE:**
Pitting on the clutch housing dogs will cause erratic clutch operation.

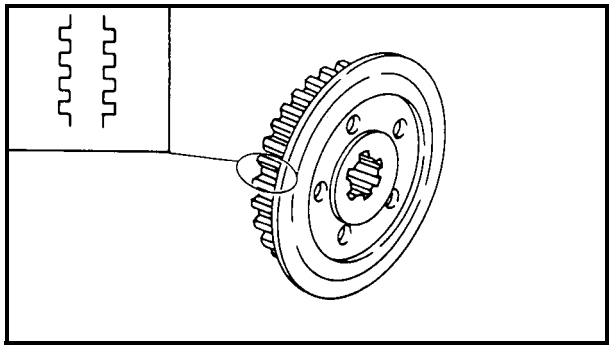

2. Check:
   - clutch boss splines
     Damage/pitting/wear → Replace the clutch boss.

**NOTE:**
Pitting on the clutch boss splines will cause erratic clutch operation.

3. Check:
   - pressure plate
     Cracks/damage → Replace.

EBS00306

## CHECKING THE PUSH RODS

1. Check:
   - short push rod
   - ball
   - long push rod
     Wear/cracks/damage → Replace.

EBS00300

### CHECKING THE FRICTION PLATES

The following procedure applies to all of the friction plates.

1. Check:
   - friction plate
     Damage/wear → Replace the friction plates as a set.

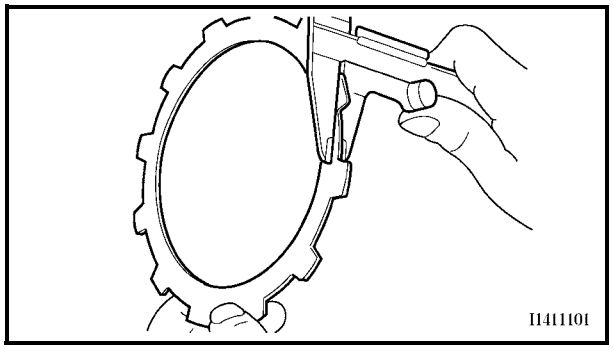


2. Measure:
   - friction plate thickness
     Out of specification → Replace the friction plates as a set.

**NOTE:**

Measure the friction plate at four places.

**Friction plate thickness**
**2.94 ~ 3.06 mm (0.116 ~ 0.120 in)**
**<Limit>: 2.80 mm (0.110 in)**

EBS00301

### CHECKING THE CLUTCH PLATES

The following procedure applies to all of the clutch plates.

1. Check:
   - clutch plate
     Damage → Replace the clutch plates as a set.

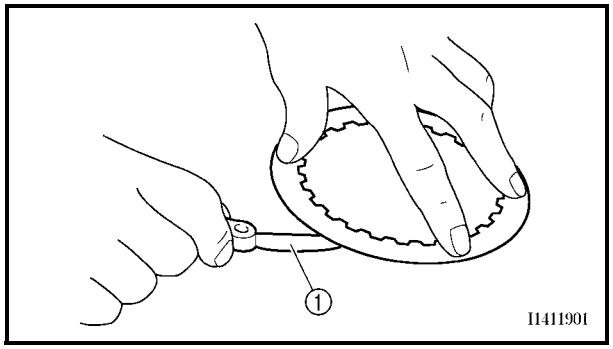


2. Measure:
   - clutch plate warpage
     (with a surface plate and thickness gauge ①)
     Out of specification → Replace the clutch plates as a set.

**Clutch plate 1 thickness**
**Warpage limit**
**0.2 mm (0.0079 in)**
**Clutch plate 2 thickness**
**Warpage limit**
**0.2 mm (0.0079 in)**

EBS00302
## CHECKING THE CLUTCH SPRINGS

The following procedure applies to all of the clutch springs.

1. Check:
   - clutch spring
     Damage → Replace the clutch springs as a set.

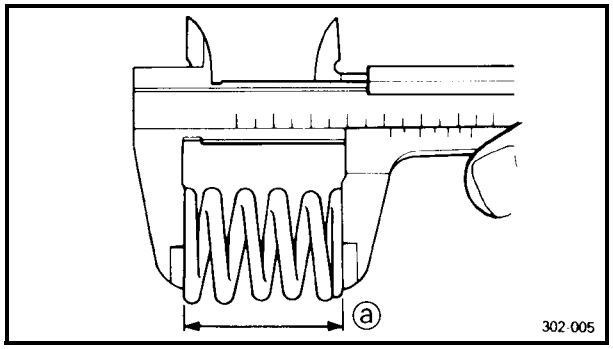


2. Measure:
   - clutch spring free length ⓐ
     Out of specification → Replace the clutch springs as a set.

**Clutch spring free length**
**40.1 mm (1.58 in)**
**<Limit>: 38.1 mm (1.50 in)**

EBS00311
## INSTALLING THE CLUTCH

1. Install:
   - secondary clutch housing
   - thrust washer
   - clutch boss
   - lock washer New

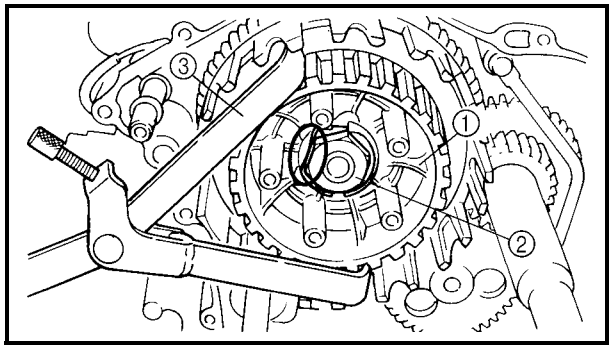


2. Install:
   - clutch boss ①
   - lock washer New
   - clutch boss nut ②

| 90 Nm (9.0 m · kg, 65 ft · lb) |
|---|

**NOTE:**
While holding the clutch boss ① with the universal clutch holder ③, tighten the clutch boss nut.

| | |
|---|---|
| | **Universal clutch holder**<br>**90890-04086, YM-91042** |

3. Bend the lock washer tabs along a flat side of the nut.
4. Lubricate:
   - friction plates
   - clutch plates
   (with the recommended lubricant)

| | |
|---|---|
| | **Recommended lubricant**<br>**Engine oil** |

5. Install:
   - friction plates
   - clutch plates

**NOTE:**
First, install a friction plate and then alternate between a clutch plate and a friction plate.

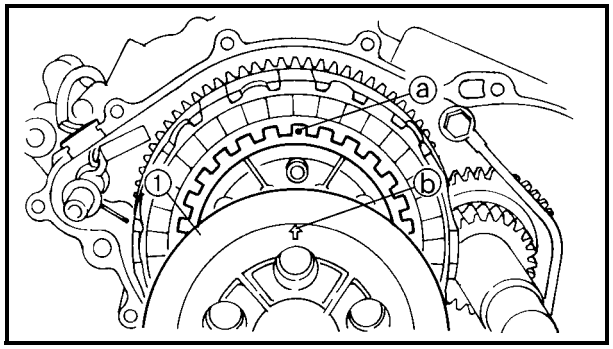


6. Install:
   - pressure plate ①
   - clutch springs

| 8 Nm (0.8 m · kg, 5.8 ft · lb) |
|---|

**NOTE:**
- Align the punched mark ⓐ on the clutch boss with the arrow mark ⓑ on the pressure plate.
- Tighten the clutch spring bolts in stages and in a crisscross pattern.

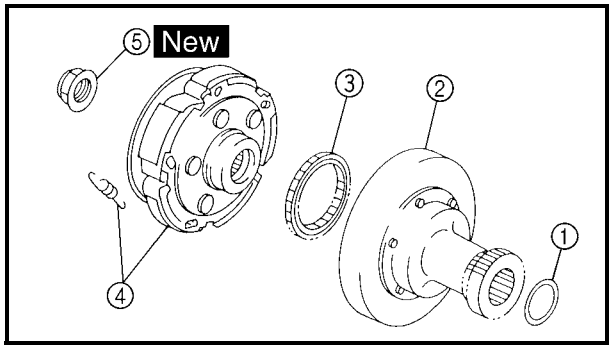


7. Install:
   - washer ①
   - secondary clutch housing ②
   - one-way clutch bearing ③
   - clutch carrier assembly ④
   - clutch carrier assembly nut ⑤ New

**NOTE:**
- The one-way clutch bearing should be installed in the primary clutch housing with the mark “OUT SIDE” ⓐ facing toward the clutch carrier assembly.
- The secondary clutch housing has two notches ⓑ to allow the primary drive gear, located behind the primary clutch, to clear the secondary clutch. Align one of these notches with the primary gear ⓒ before installing the primary clutch assembly.

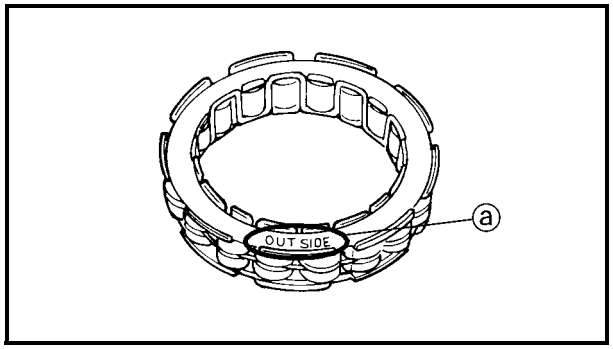


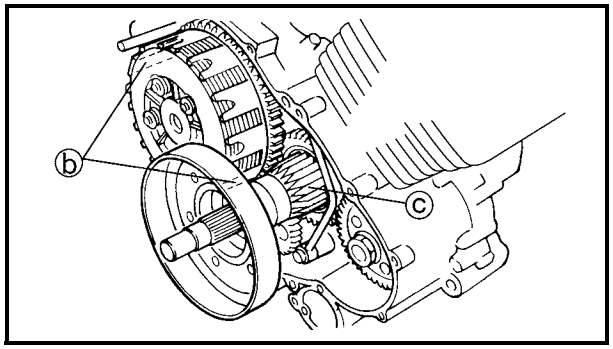


8. Tighten:
   - clutch carrier assembly nut ①

**140 Nm (14.0 m · kg, 100 ft · lb)**

**NOTE:**
- Place an aluminum plate ② between the teeth of the balancer drive gear and balancer driven gear.
- Stake the clutch carrier assembly nut at a cutout ⓐ in the crankshaft.

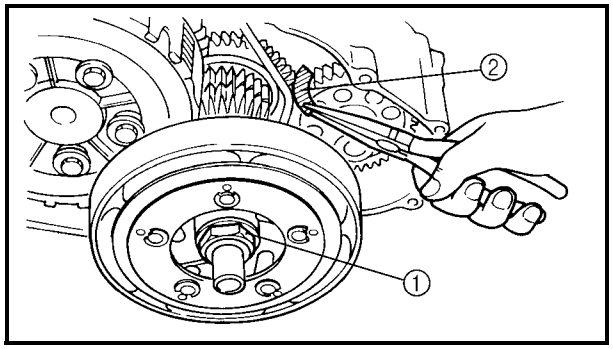


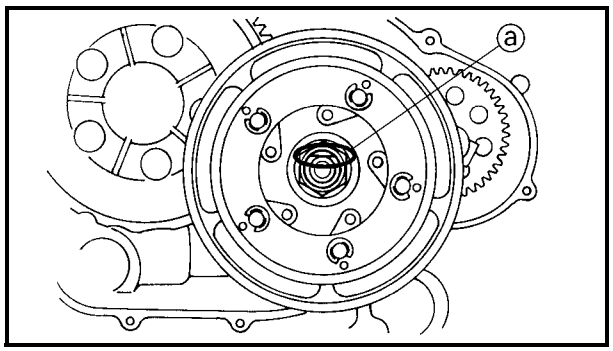

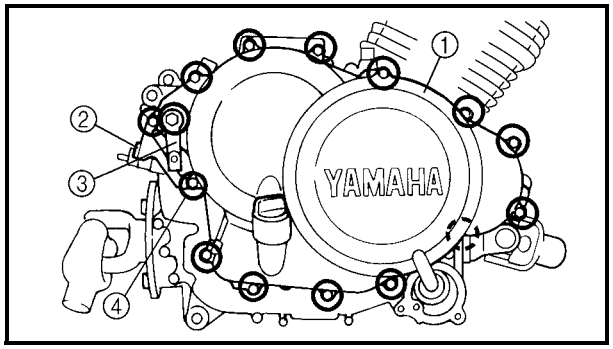


9. Install:
   - clutch cover ①
   - reverse control cable holder ②
   - reverse control lever ③

**NOTE:**
- Apply the Three bond 1207B to threads of the bolt ④.
- Tighten the clutch cover bolts in stages and in a crisscross pattern.

10. Adjust:
   - clutch release
     Refer to “ADJUSTING THE CLUTCH RELEASE” in chapter 3.

## BALANCER GEARS AND OIL PUMP

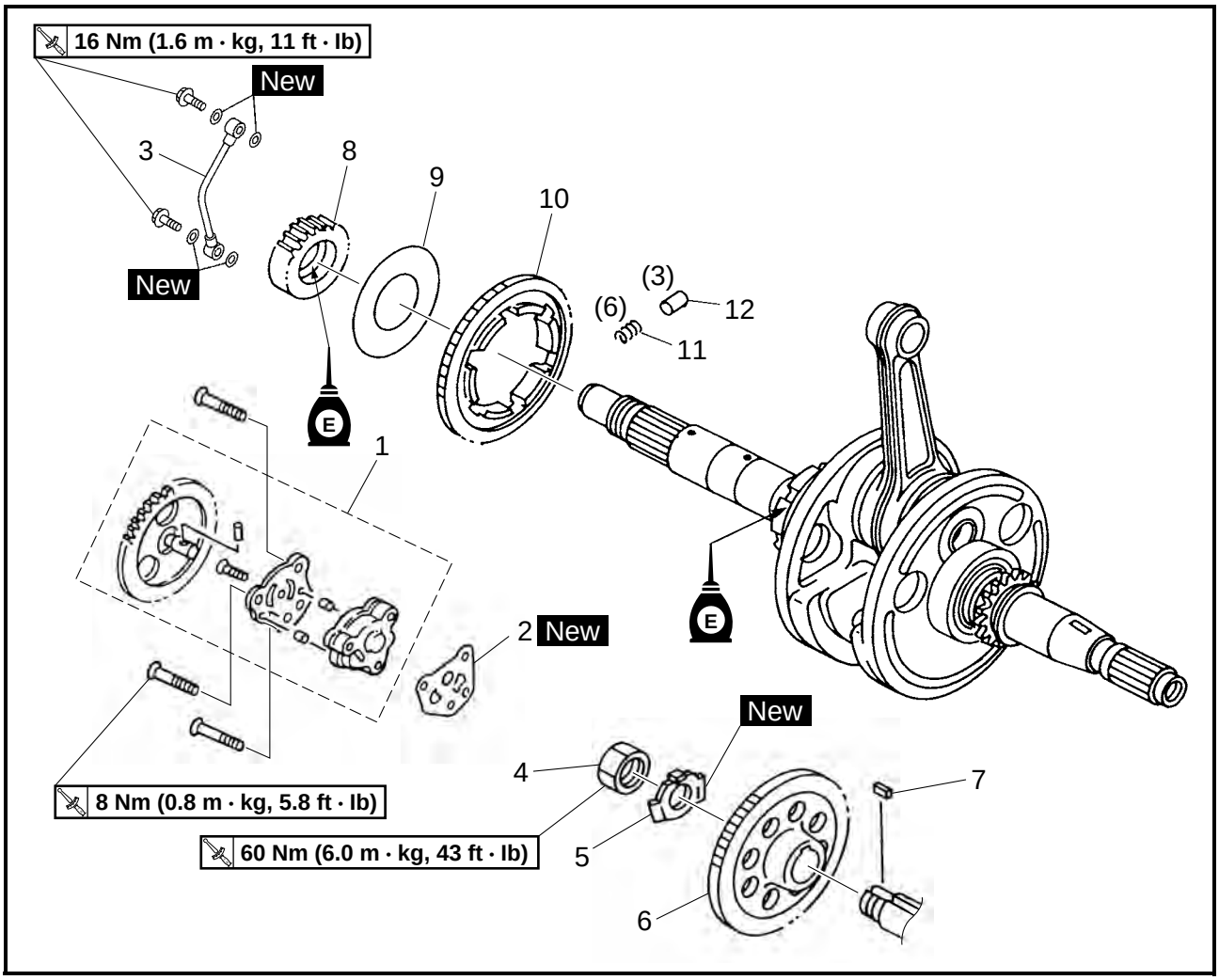


| Order | Job/Part | Q'ty | Remarks |
|---|---|---|---|
| | **Removing the balancer gears and oil pump** | | Remove the parts in the order listed. |
| | Primary clutch housing | | Refer to "CLUTCH". |
| 1 | Oil pump assembly | 1 | |
| 2 | Oil pump gasket | 1 | |
| 3 | Oil delivery pipe 1 | 1 | |
| 4 | Balancer driven gear nut | 1 | |
| 5 | Lock washer | 1 | |
| 6 | Balancer driven gear | 1 | Refer to "REMOVING THE OIL PUMP DRIVE GEAR AND BALANCER DRIVE GEAR" and "INSTALLING THE BALANCER DRIVE GEARS AND OIL PUMP". |
| 7 | Straight key | 1 | |
| 8 | Oil pump drive gear | 1 | |
| 9 | Washer | 1 | |

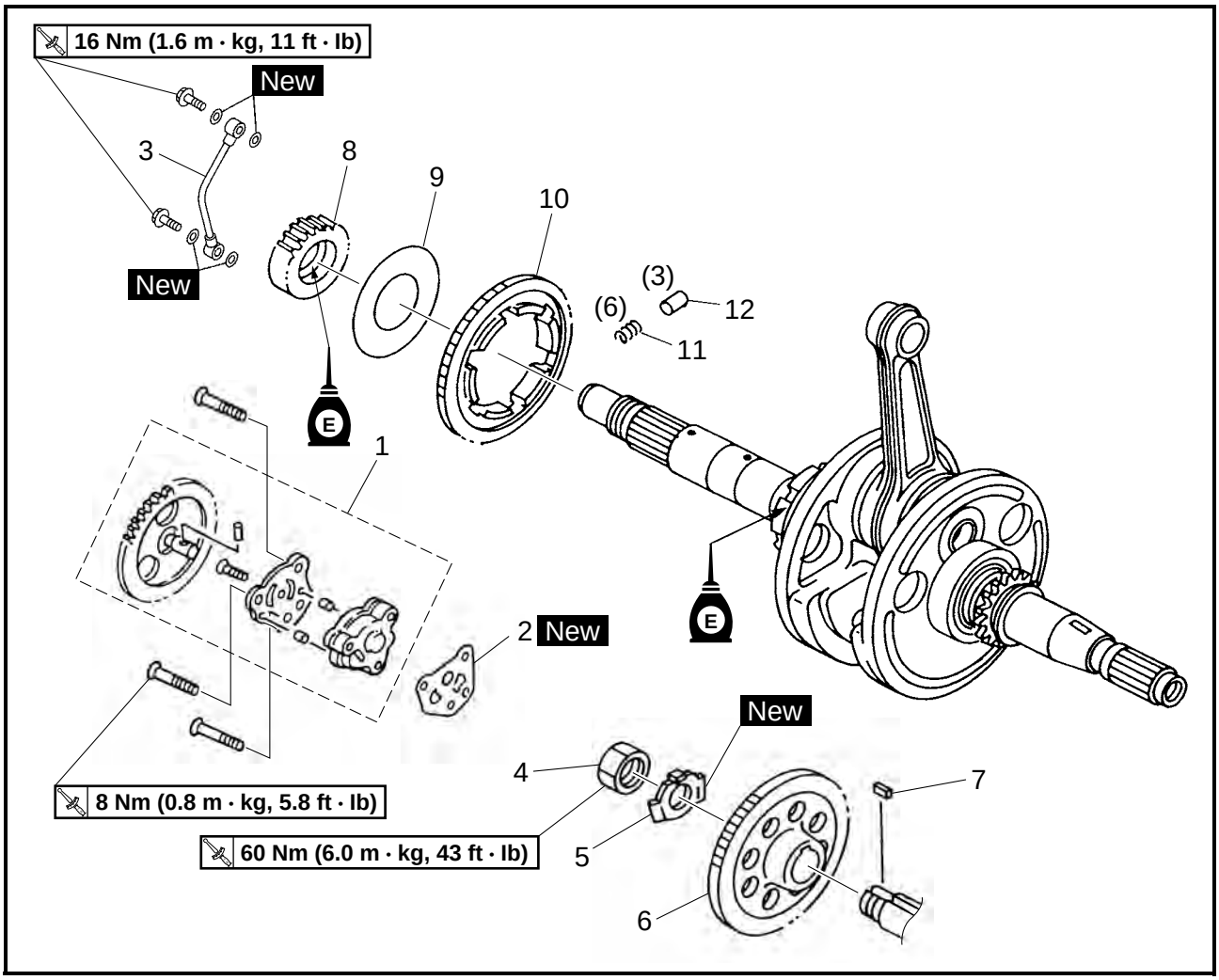


| Order | Job/Part | Q'ty | Remarks |
|---|---|---|---|
| 10 | Balancer drive gear | 1 | |
| 11 | Spring | 6 | |
| 12 | Pin | 3 | |
| | | | For installation, reverse the removal procedure. |

## OIL PUMP

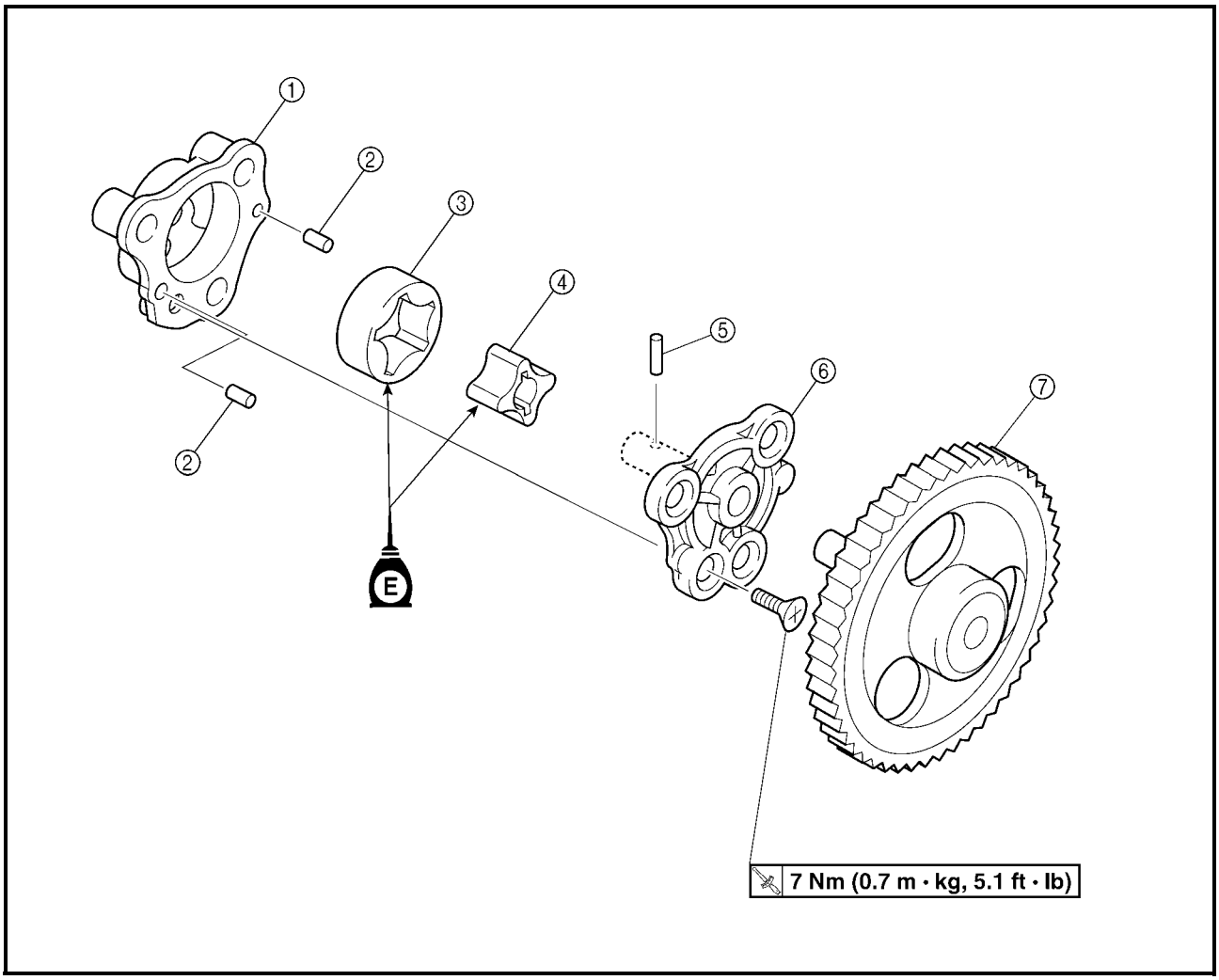


| Order | Job/Part | Q'ty | Remarks |
|---|---|---|---|
| | **Disassembling the oil pump** | | Remove the parts in the order listed. |
| ① | Oil pump housing | 1 | |
| ② | Pin | 2 | |
| ③ | Outer rotor | 1 | |
| ④ | Inner rotor | 1 | |
| ⑤ | Pin | 1 | |
| ⑥ | Oil pump housing cover | 1 | |
| ⑦ | Oil pump driven gear | 1 | |
| | | | For assembly, reverse the disassembly procedure. |

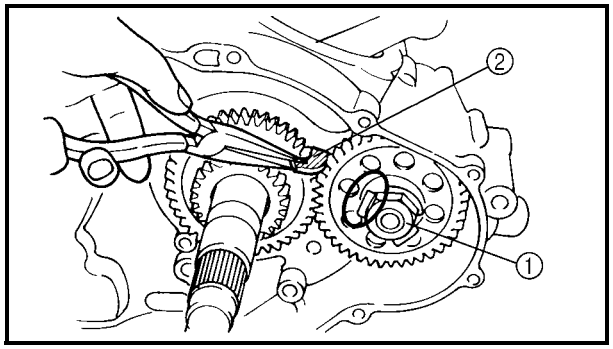


**REMOVING THE BALANCER DRIVEN GEAR**

1. Straighten the lock washer tab.
2. Loosen:
   - balancer driven gear nut ①

**NOTE:**

Place an aluminum plate ② between the teeth of the balancer drive gear and balancer driven gear.

3. Remove:
   - balancer driven gear nut

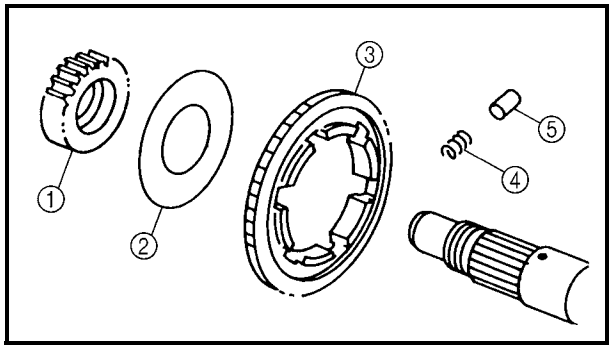


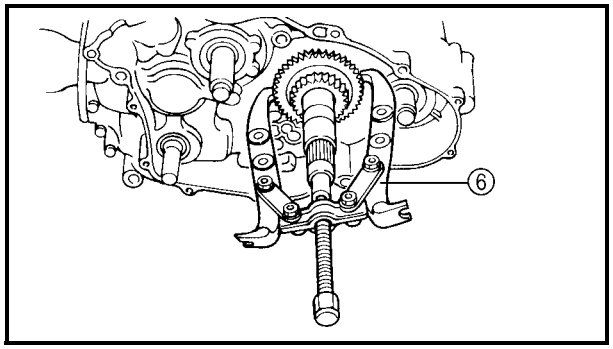


**REMOVING THE OIL PUMP DRIVE GEAR AND BALANCER DRIVE GEAR**

1. Remove:
   - oil pump drive gear ①
   - washer ②
   - balancer drive gear ③
   - springs ④
   - pins ⑤

**NOTE:**

- The balancer drive gear has six springs and three pins. Use care so they do not fall out when removing the balancer drive gear.
- Use a two-leg puller ⑥ when removing the oil pump drive gear ① and balancer drive gear ③.

EBS00331

**CHECKING THE OIL PUMP**

1. Check:
   - oil pump housing
   - oil pump housing cover
     Cracks/wear/damage → Replace.

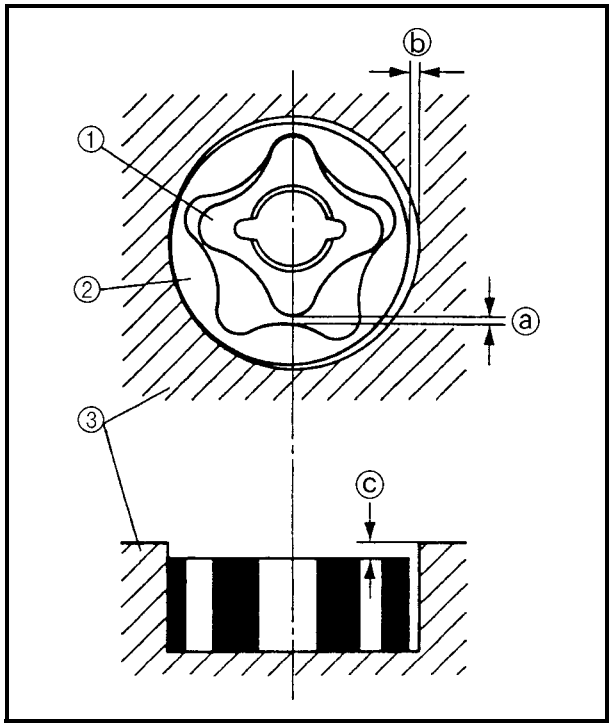


2. Measure:
   - inner-rotor-to-outer-rotor-tip clearance ⓐ
   - outer-rotor-to-oil-pump-housing clearance ⓑ
   - oil-pump-housing-to-inner-rotor-and-outer-rotor clearance ⓒ

   Out of specification → Replace the oil pump.

① Inner rotor
② Outer rotor
③ Oil pump housing

**Inner-rotor-to-outer-rotor-tip clearance**
**Less than 0.15 mm (0.0059 in)**
**<Limit>: 0.23 mm (0.0091 in)**
**Outer-rotor-to-oil-pump-housing clearance**
**0.10 ~ 0.15 mm**
**(0.0039 ~ 0.0059 in)**
**<Limit>: 0.22 mm (0.0087 in)**
**Oil-pump-housing-to-inner-rotor-and-outer-rotor clearance**
**0.04 ~ 0.09 mm**
**(0.0016 ~ 0.0035 in)**
**<Limit>: 0.16 mm (0.0063 in)**

3. Check:
   - oil pump operation

   Rough movement → Repeat steps (1) and (2) or replace the defective part(s).

### CHECKING THE OIL PUMP DRIVE GEAR AND OIL PUMP DRIVEN GEAR

1. Check:
   - oil pump drive gear
   - oil pump driven gear

   Cracks/wear/damage → Replace.

### CHECKING THE BALANCER DRIVE GEAR AND BALANCER DRIVEN GEAR

1. Check:
   - balancer drive gear
   - balancer driven gear

     Damage/wear → Replace the balancer drive gear and balancer driven gear as a set.

     Excessive noise during operation → Replace the balancer drive gear and balancer driven gear as a set.

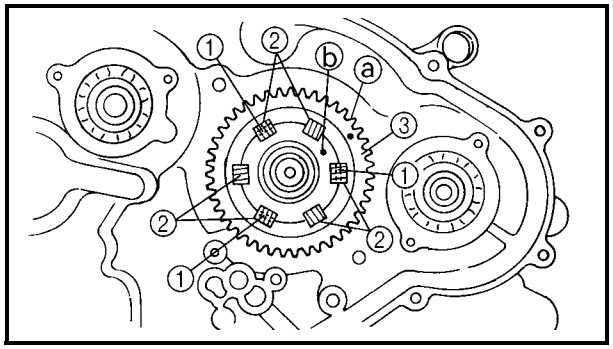


### INSTALLING THE BALANCER DRIVE GEARS AND OIL PUMP

1. Install:
   - pins ①
   - springs ②
   - balancer drive gear ③
     (onto the buffer boss)

**NOTE:**

- The balancer drive gear damper assembly is composed of three pins ① and six springs ②. Insert a spring into the buffer boss, then insert a spring with a pin in it.
- Align the punch mark ⓐ on the balancer drive gear with the punch mark ⓑ on the buffer boss.

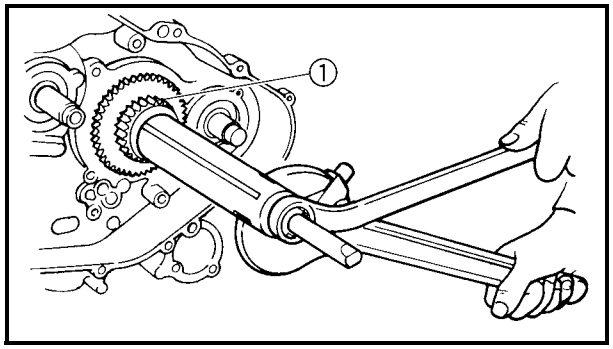


2. Install:
   - washer
   - oil pump drive gear ①

**NOTE:**
Apply engine oil to the inner surface of the oil pump drive gear.

**Adapter #11**
**YM-33279**
**Pot spacer**
**90890-04060, YM-90070-A**
**Crankshaft installer set**
**YU-90050**
**Buffer boss installer set**
**90890-04088**

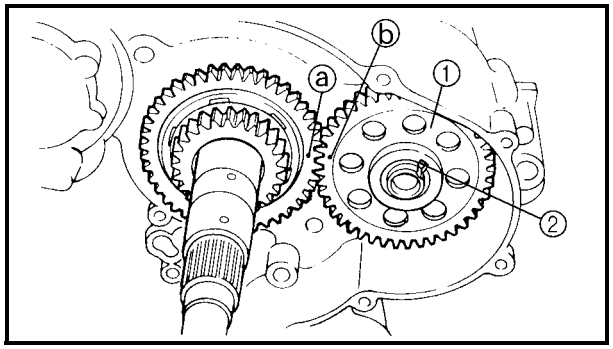


3. Install:
   - balancer driven gear ①
   - straight key ②

**NOTE:**
Align the punch mark ⓐ on the balancer drive gear with the punch mark ⓑ on the balancer driven gear.

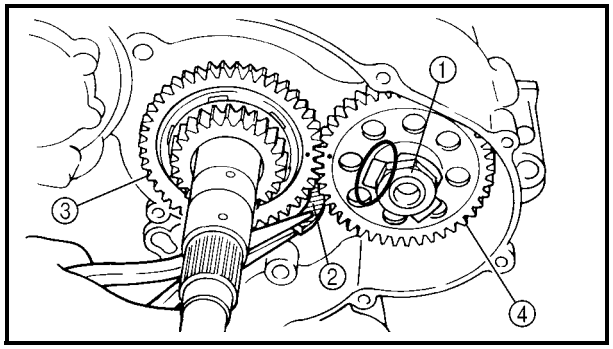


4. Install:
   - lock washer New
   - balancer driven gear nut ①

**60 Nm (6.0 m · kg, 43 ft · lb)**

**NOTE:**
Place an aluminum plate ② between the teeth of the balancer drive gear ③ and balancer driven gear ④.

5. Bend the lock washer tab along a flat side of the balancer driven gear nut.

## CRANKCASE

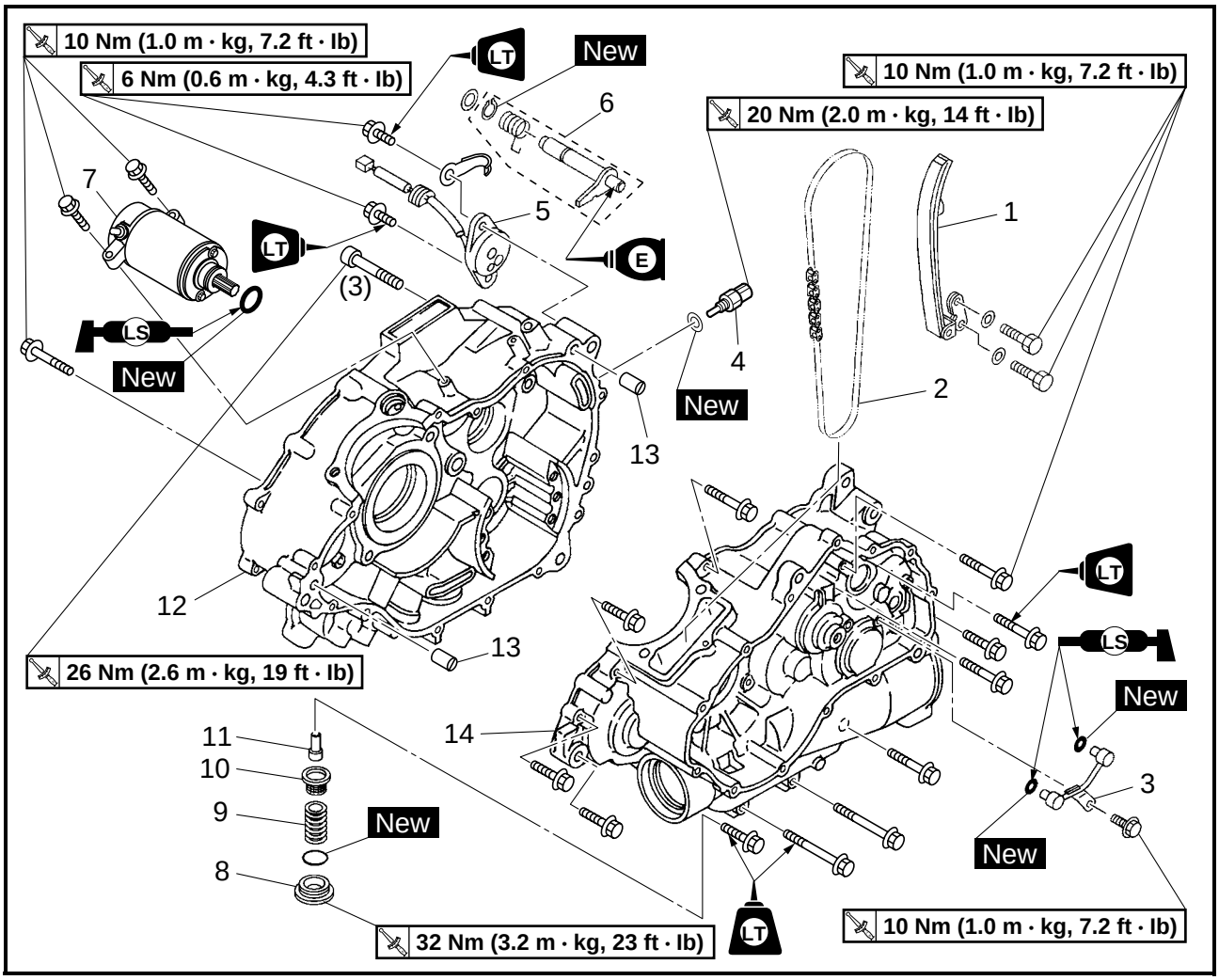


| Order | Job/Part | Q'ty | Remarks |
|---|---|---|---|
| | **Separating the crankcase** | | Remove the parts in the order listed. |
| | Engine assembly | | Refer to "ENGINE REMOVAL". |
| | Cylinder head | | Refer to "CYLINDER HEAD". |
| | Cylinder and piston | | Refer to "CYLINDER AND PISTON". |
| | Starter wheel gear | | Refer to "RECOIL STARTER AND AC MAGNETO ROTOR". |
| | Secondary clutch housing | | Refer to "CLUTCH". |
| | Balancer drive gear | | Refer to "BALANCER GEARS AND OIL PUMP". |
| | Shift shaft assembly | | Refer to "SHIFT SHAFT". |
| 1 | Timing chain guide (intake side) | 1 | |
| 2 | Timing chain | 1 | |
| 3 | Oil delivery pipe 3 | 1 | |
| 4 | Oil temperature sensor | 1 | |

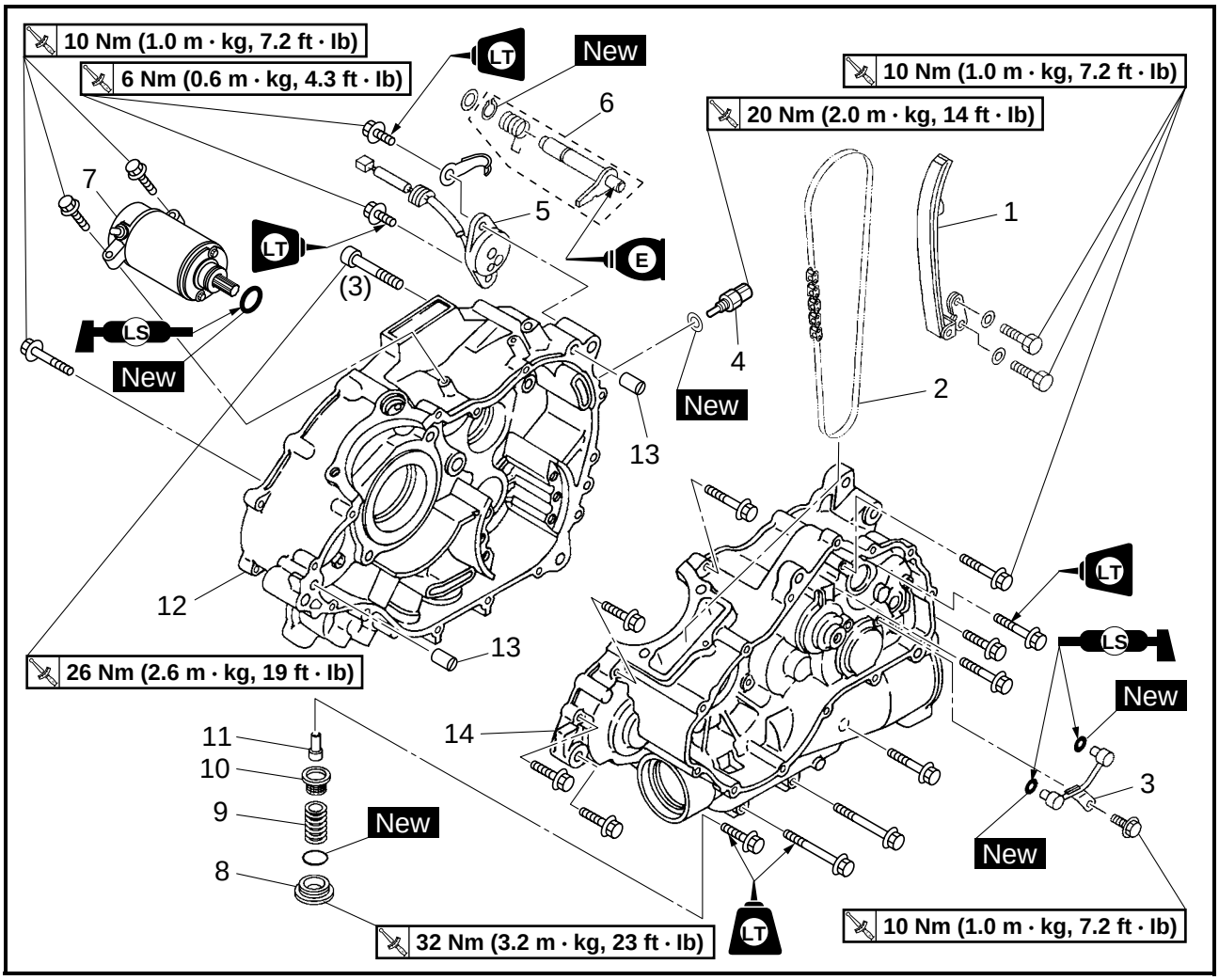


| Order | Job/Part | Q'ty | Remarks |
|---|---|---|---|
| 5 | Gear position switch | 1 | |
| 6 | Reverse shift bracket | 1 | |
| 7 | Starter motor | 1 | |
| 8 | Engine oil drain plug | 1 | |
| 9 | Compression spring | 1 | |
| 10 | Oil strainer | 1 | |
| 11 | Oil pipe | 1 | |
| 12 | Right crankcase | 1 | |
| 13 | Dowel pin | 2 | |
| 14 | Left crankcase | 1 | |
| | | | For installation, reverse the removal procedure. |

## CRANKCASE BEARINGS

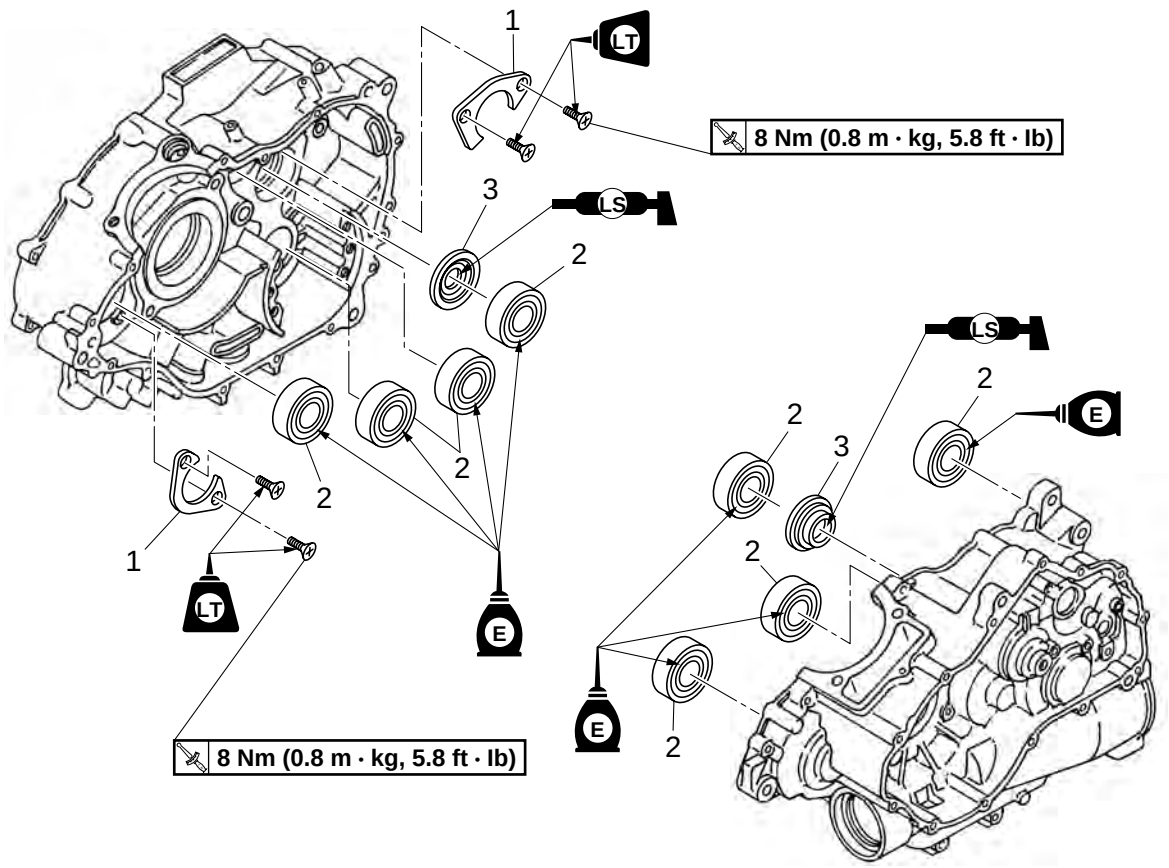


| Order | Job/Part | Q'ty | Remarks |
|---|---|---|---|
| | **Removing the crankcase bearings** | | Remove the parts in the order listed. |
| | Crankshaft/balancer | | Refer to "CRANKSHAFT". |
| | Transmission | | Refer to "TRANSMISSION". |
| | Middle drive pinion gear shaft | | Refer to "MIDDLE GEAR". |
| 1 | Bearing retainer | 2 | |
| 2 | Bearing | 8 | |
| 3 | Oil seal | 2 | |
| | | | For installation, reverse the removal procedure. |

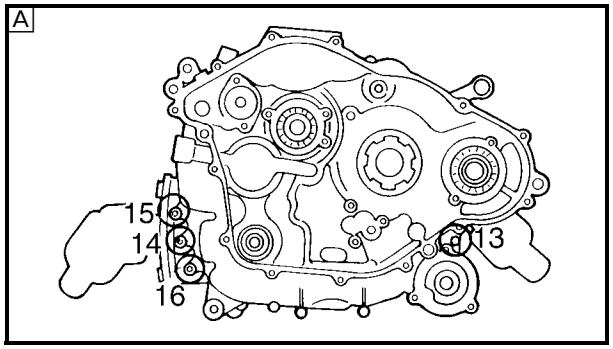


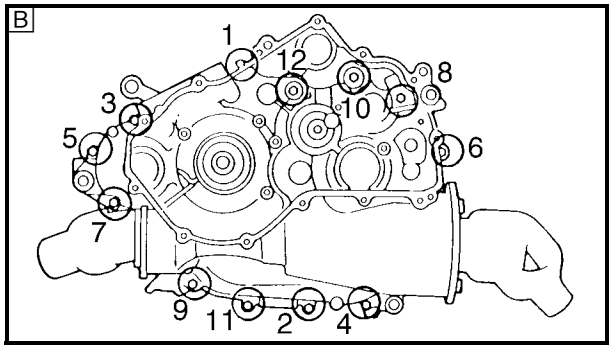


EBS00332

## SEPARATING THE CRANKCASE

1. Separate:
   - left crankcase
   - right crankcase

▼▼▼▼▼▼▼▼▼▼▼▼▼▼▼▼▼▼▼▼▼▼▼▼▼▼▼▼▼▼▼▼▼▼

a. Remove the crankcase bolts.

**NOTE:**

- Loosen each bolt 1/4 of a turn at a time and after all the bolts are loosened, remove them.
- Loosen the bolts in decreasing numerical order.

A Right crankcase
B Left crankcase

b. Remove the left crankcase.

**CAUTION:**

**Use a soft hammer to tap on one side of the crankcase. Tap only on reinforced portions of the crankcase. Do not tap on the crankcase mating surfaces. Work slowly and carefully. Make sure that the crankcase halves separate evenly.**

c. Remove the dowel pins.

▲▲▲▲▲▲▲▲▲▲▲▲▲▲▲▲▲▲▲▲▲▲▲▲▲▲▲▲▲▲▲▲▲▲

EBS00325

## CHECKING THE OIL STRAINER AND OIL DELIVERY PIPE

1. Check:
   - oil strainer
     Damage → Replace.
     Contaminants → Clean with engine oil.
2. Check:
   - oil delivery pipe 3
     Cracks/damage → Replace.
     Clogged → Blow out with compressed air.

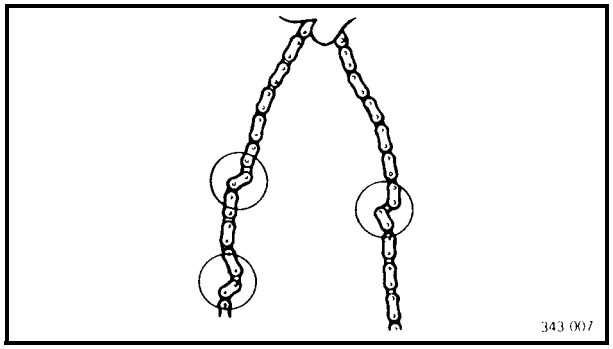


EBS00335

**CHECKING THE TIMING CHAIN AND GUIDE**

1. Check:
   - timing chain
     Cracks/stiffness → Replace the timing chain and camshaft as a set.
2. Check:
   - timing chain guide (intake side)
     Wear/damage → Replace.

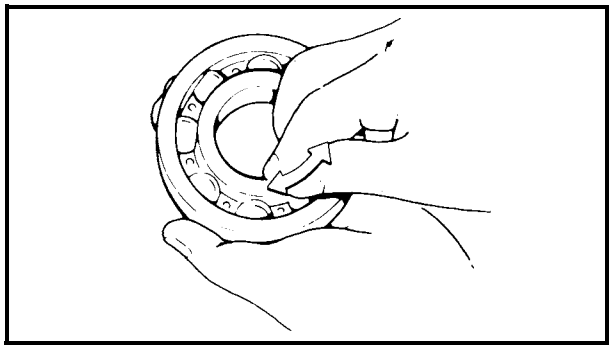

EBS00339

**CHECKING THE BEARINGS AND OIL SEALS**

1. Check:
   - bearings
     Clean and lubricate, then rotate the inner race with a finger.
     Roughness → Replace.
2. Check:
   - oil seals
     Damage/wear → Replace.

EBS00338

**CHECKING THE CRANKCASE**

1. Thoroughly wash the case halves in a mild solvent.
2. Clean all the gasket mating surfaces and crankcase mating surfaces thoroughly.
3. Check:
   - crankcase
     Cracks/damage → Replace.
   - oil delivery passages
     Clogged → Blow out with compressed air.

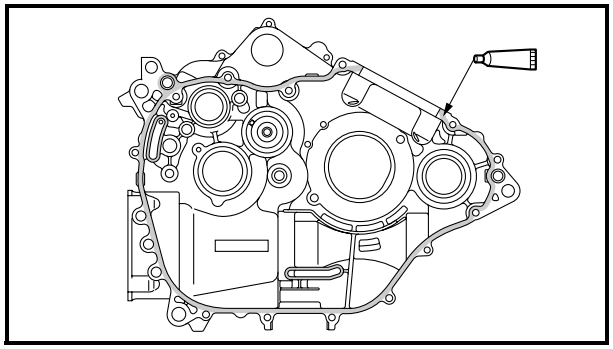

EBS00342

## ASSEMBLING THE CRANKCASE

1. Apply:
   - sealant
     (to the mating surfaces of both case halves)

| | |
|---|---|
| | **Yamaha bond No. 1215**<br>**90890-85505**<br>**(Three bond No.1215®)** |

2. Install:
   - dowel pins
3. Fit the left crankcase onto the right crankcase. Tap lightly on the case with a soft hammer.

**CAUTION:**

**Before installing and torquing the crankcase bolts, be sure to check whether the transmission is functioning properly by manually rotating the shift drum in both directions.**

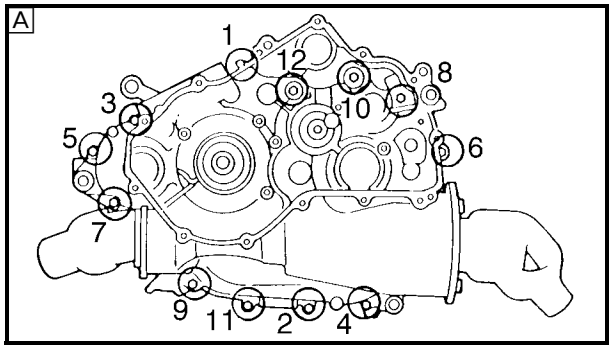


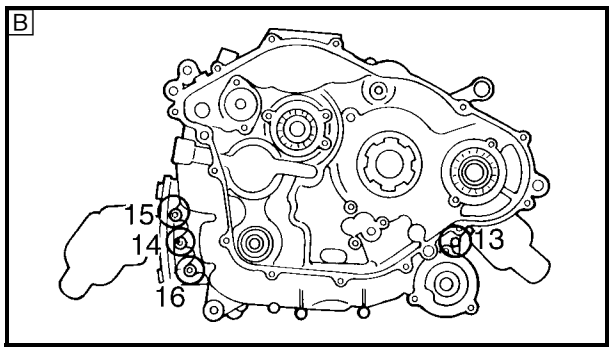


4. Install:
   - crankcase bolts

A Left crankcase
B Right crankcase

M6 × 30 mm bolts: ③, ⑤ ~ ⑦, ⑨
M6 × 50 mm bolts: ①, ④, ⑧, ⑩, ⑫, ⑬
M6 × 60 mm bolts: ②, ⑪
M8 × 60 mm bolts: ⑭ ~ ⑯

5. Tighten:
   - crankcase bolt ① ~ ⑬

| | |
|---|---|
| | **10 Nm (1.0 m · kg, 7.2 ft · lb)** |

   - crankcase bolt ⑭ ~ ⑯

| | |
|---|---|
| | **26 Nm (2.6 m · kg, 19 ft · lb)** |

**NOTE:**

- Apply Three bond 1207B to the bolt threads ⑧, ⑨ and ⑪.
- Tighten the bolts starting with the lowest numbered one.

6. Apply:
   - 4-stroke engine oil
     (to the crankshaft pin, bearing and oil delivery hole)
7. Check:
   - crankshaft and transmission operation
     Unsmooth operation → Repair.

# CRANKSHAFT

## CRANKSHAFT AND BALANCER

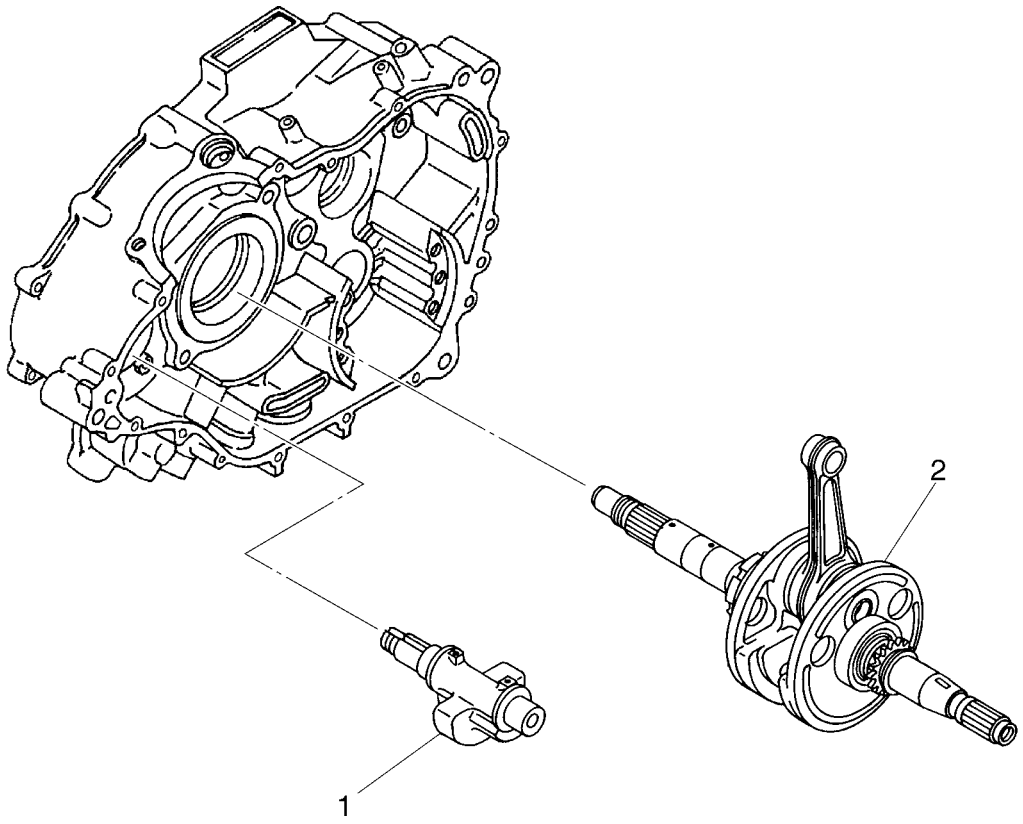


| Order | Job/Part | Q'ty | Remarks |
|---|---|---|---|
| | **Removing the crankshaft and balancer** | | Remove the parts in the order listed. |
| | Crankcase | | Separate.<br>Refer to "CRANKCASE". |
| 1 | Balancer | 1 | |
| 2 | Crankshaft | 1 | Refer to "REMOVING THE CRANKSHAFT" and "INSTALLING THE CRANKSHAFT".<br>For installation, reverse the removal procedure. |

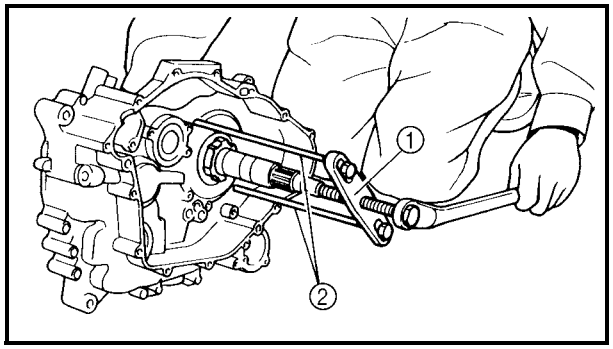


EBS00336

## REMOVING THE CRANKSHAFT

1. Remove:
   - crankshaft
     Use a crankcase separating tool ① and slide hammer bolt ②.

**Crankcase separating tool**
**90890-01135**
**Crankcase separator**
**YU-01135-B**
**Slide hammer bolt**
**90890-01085**
**Slide hammer bolt 8 mm**
**YU-01083-2**

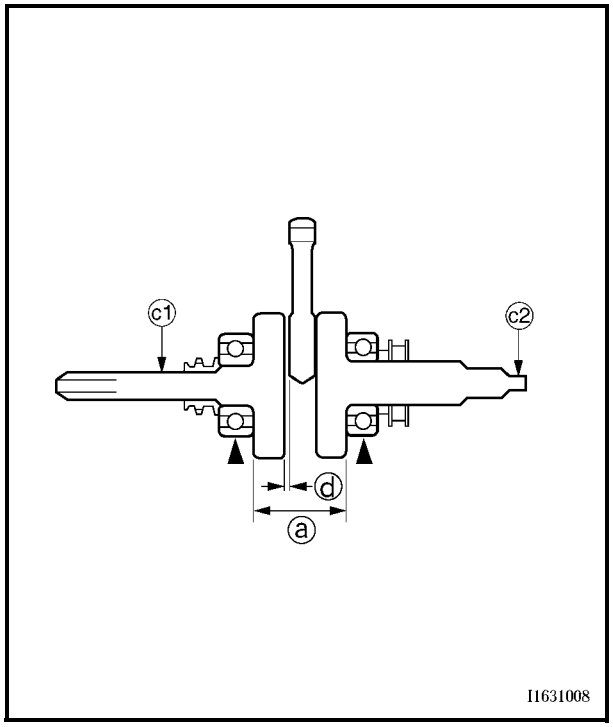


EBS00360

## CHECKING THE CRANKSHAFT

1. Measure:
   - crank width ⓐ
     Out of specification → Replace the crankshaft.

**Crank width**
**58.95 ~ 59.00 mm**
**(2.321 ~ 2.323 in)**

2. Measure:
   - side clearance ⓓ
     Out of specification → Replace the crankshaft.

**Big end side clearance**
**0.35 ~ 0.85 mm**
**(0.0138 ~ 0.0335 in)**
**<Limit>: 1.00 mm (0.0394 in)**

3. Measure:
   - runout ⓒ
     Out of specification → Replace the crankshaft.

**Runout limit**
**C1: 0.03 mm (0.0012 in)**
**C2: 0.06 mm (0.0024 in)**

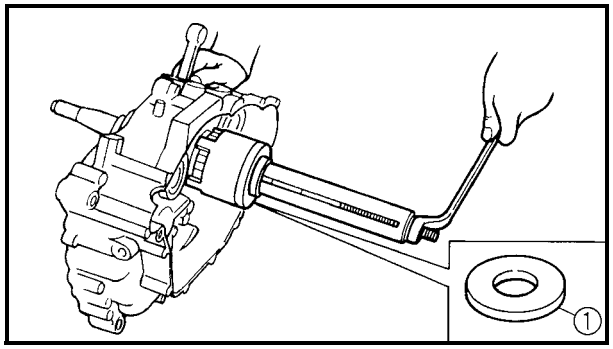


**INSTALLING THE CRANKSHAFT**

1. Install:
   - crankshaft

**Crankshaft installer set**
**YU-90050**
**Crankshaft installer bolt**
**90890-01275**
**Bolt**
**YU-90060**
**Buffer boss installer set**
**90890-04088**
**Adapter #11**
**YM-33279**
**Pot spacer**
**90890-04060, YM-90070-A**
**Pot extension**
**YM-33280**
**Spacer (crankshaft installer)**
**90890-04081**
**Pot spacer**
**YM-91044**

**NOTE:**

- Install a suitable steel plate ① between the crank pot spacer and crankshaft installer set or buffer boss installer set.
- Hold the connecting rod at the Top Dead Center (TDC) with one hand while turning the nut of the installing tool with the other. Operate the installing tool until the crankshaft bottoms against the bearing.

**CAUTION:**

**Apply engine oil to each bearing to protect the crankshaft against scratches and to make installation easier.**

## TRANSMISSION

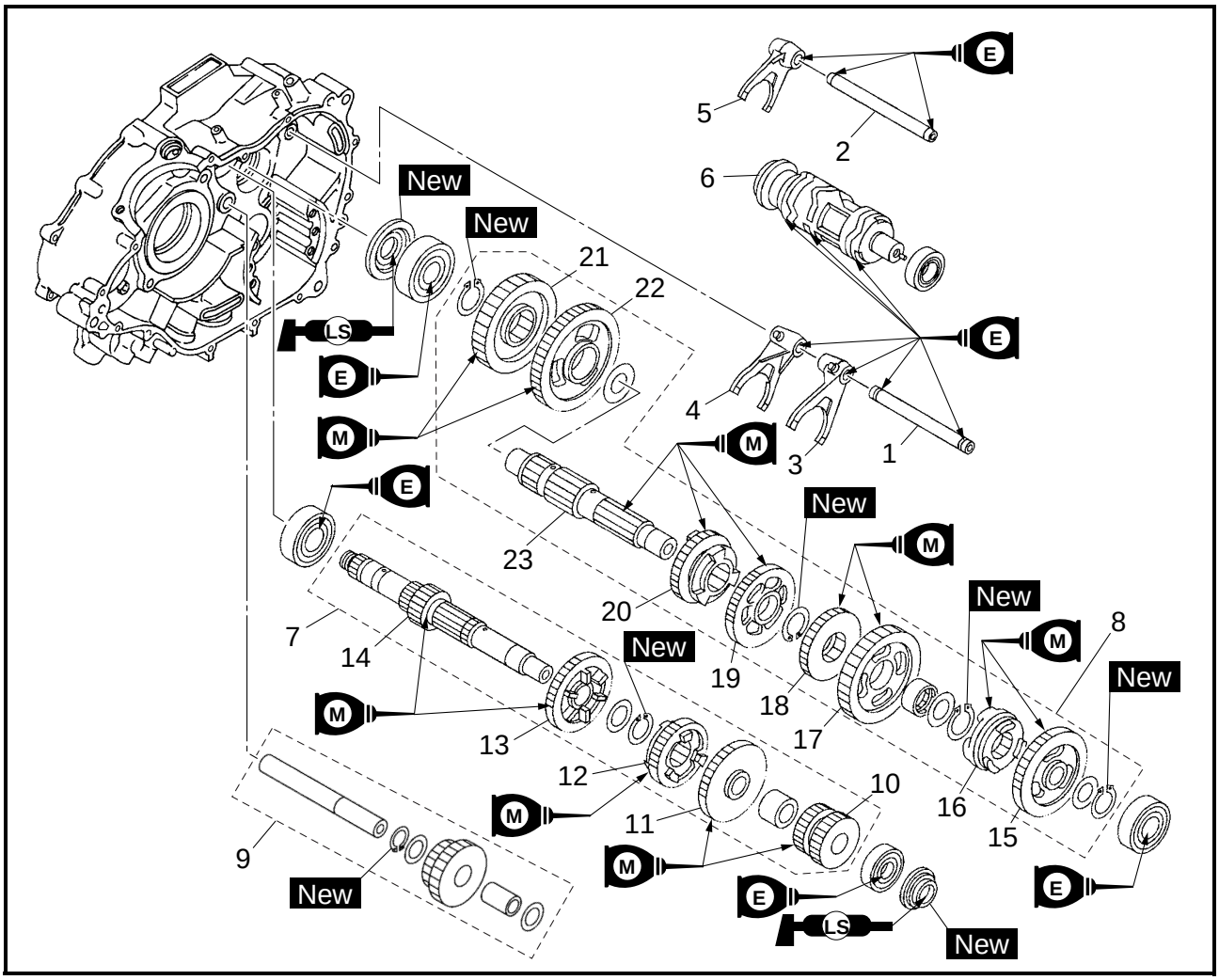


| Order | Job/Part | Q'ty | Remarks |
|---|---|---|---|
| | **Removing the transmission** | | Remove the parts in the order listed. |
| | Crankcase | | Separate.<br>Refer to "CRANKCASE". |
| | Middle drive pinion gear assembly | | Refer to "MIDDLE GEAR". |
| 1 | Shift fork guide bar (long) | 1 | Refer to "INSTALLING THE TRANSMISSION". |
| 2 | Shift fork guide bar (short) | 1 | |
| 3 | Shift fork "L" | 1 | |
| 4 | Shift fork "R" | 1 | |
| 5 | Shift fork "C" | 1 | |
| 6 | Shift drum | 1 | |
| 7 | Main axle assembly | 1 | |
| 8 | Drive axle assembly | 1 | |
| 9 | Reverse wheel gear assembly | 1 | |
| 10 | 2nd pinion gear | 1 | Refer to "ASSEMBLING THE MAIN AXLE AND DRIVE AXLE". |

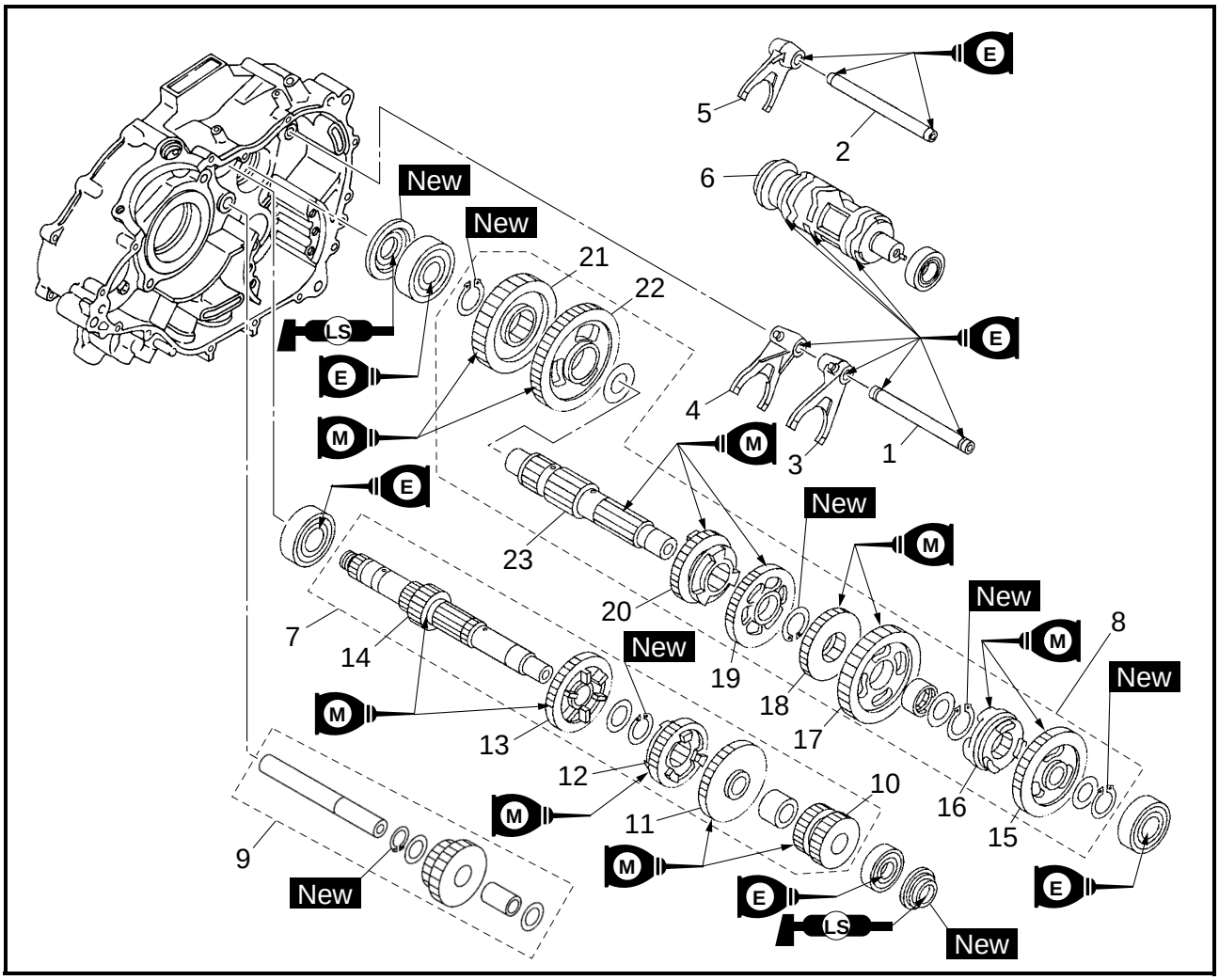


| Order | Job/Part | Q'ty | Remarks |
|---|---|---|---|
| 11 | 5th pinion gear | 1 | Refer to "ASSEMBLING THE MAIN AXLE AND DRIVE AXLE". |
| 12 | 3rd pinion gear | 1 | |
| 13 | 4th pinion gear | 1 | |
| 14 | Main axle/1st pinion gear | 1 | |
| 15 | 2nd wheel gear | 1 | |
| 16 | Clutch dog | 1 | |
| 17 | Reverse wheel gear 1 | 1 | |
| 18 | 5th wheel gear | 1 | |
| 19 | 3rd wheel gear | 1 | |
| 20 | 4th wheel gear | 1 | |
| 21 | Middle drive gear | 1 | |
| 22 | 1st wheel gear | 1 | |
| 23 | Drive axle | 1 | |
| | | | For installation, reverse the removal procedure. |

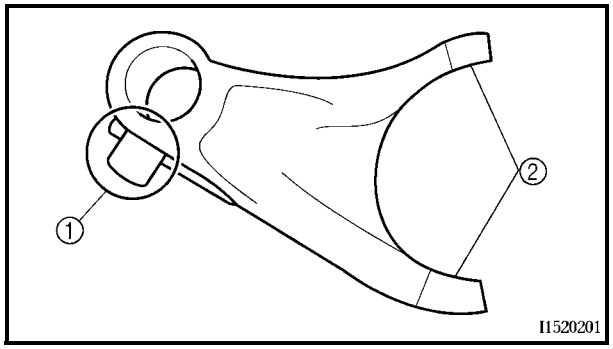


EBS00350

## CHECKING THE SHIFT FORKS

The following procedure applies to all of the shift forks.

1. Check:
   - shift fork cam follower ①
   - shift fork pawl ②
     Bends/damage/scoring/wear → Replace the shift fork.
2. Check:
   - shift fork movement
     Rough movement → Replace the shift forks.

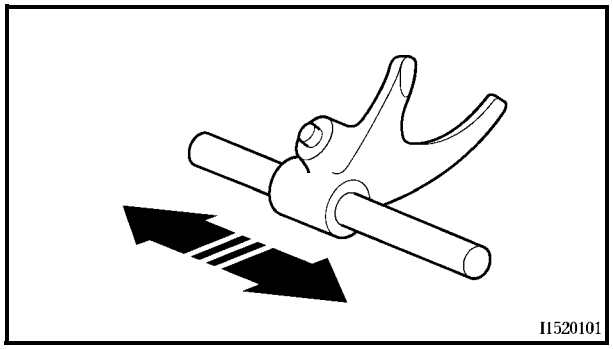


3. Check:
   - shift fork guide bar
     Roll the guide bar on a flat surface.
     Bends → Replace.

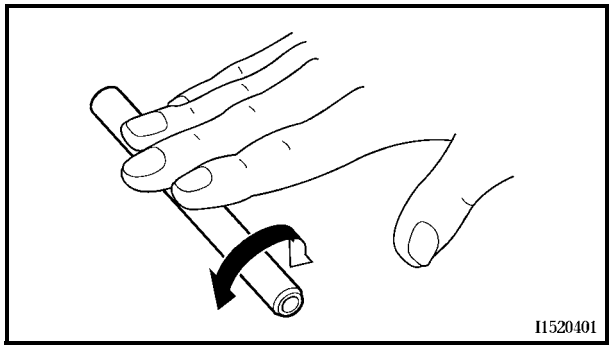


**WARNING**

**Do not attempt to straighten a bent guide bar.**

EBS00351

## CHECKING THE SHIFT DRUM ASSEMBLY

1. Check:
   - shift drum grooves
     Scratches/wear/damage → Replace.

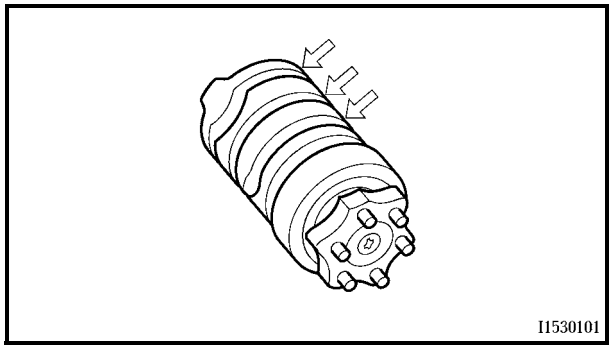

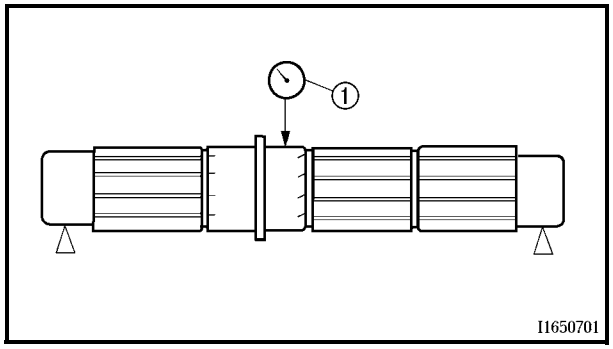


EBS00354

## CHECKING THE TRANSMISSION

1. Measure:
   - main axle runout
   - drive axle runout
     (with a centering device and dial gauge ①)
     Out of specification → Replace the main axle and/or drive axle.

**Main axle runout limit**
**0.08 mm (0.0031 in)**
**Drive axle runout limit**
**0.08 mm (0.0031 in)**

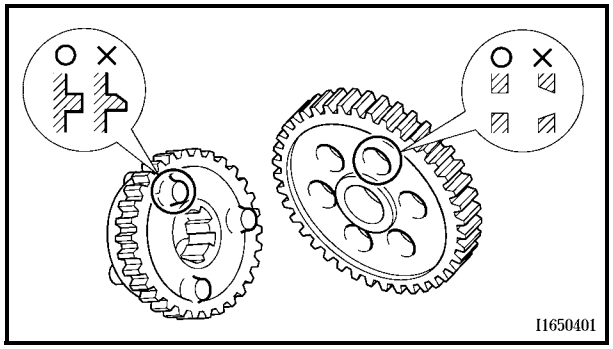


2. Check:
   - transmission gears
     Blue discoloration/pitting/wear → Replace the defective gear(s).
   - transmission gear dogs
     Cracks/damage/rounded edges → Replace the defective gear(s).
3. Check:
   - transmission gear engagement
     (each pinion gear to its respective wheel gear)
     Incorrect → Reassemble the transmission axle assemblies.
4. Check:
   - transmission gear movement
     Rough movement → Replace the defective part(s).
5. Check:
   - circlips
     Bends/damage/looseness → Replace.

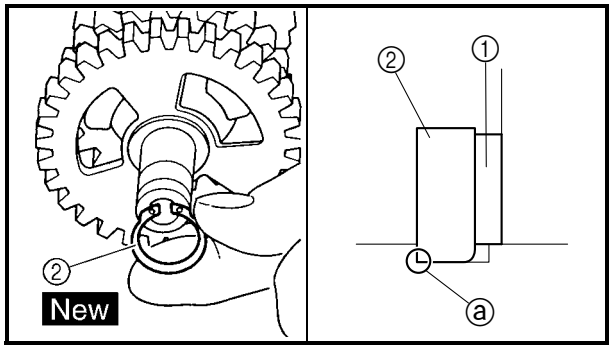


EBS00355

**ASSEMBLING THE MAIN AXLE AND DRIVE AXLE**

1. Install:
   - washer ①
   - circlip ② New

**NOTE:**

- Be sure the circlip shape-edged corner ⓐ is positioned on the opposite side to the washer and gear.
- Install the circlip so that both ends ⓑ are positioned in the center of two axle splines ⓒ.

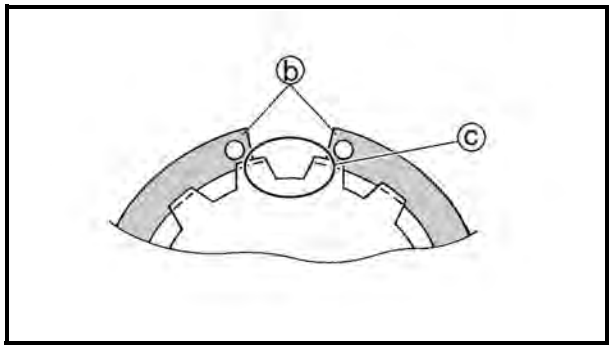


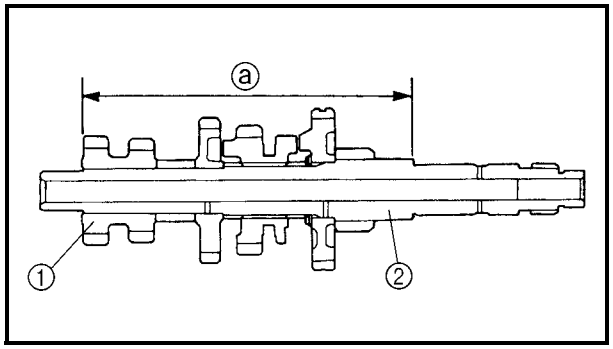


2. Install:
   - 2nd pinion gear ①

**NOTE:**

Press the 2nd pinion gear into the main axle ②, as shown in the illustration.

ⓐ 143.9 ~ 144.1 mm (5.665 ~ 5.673 in)

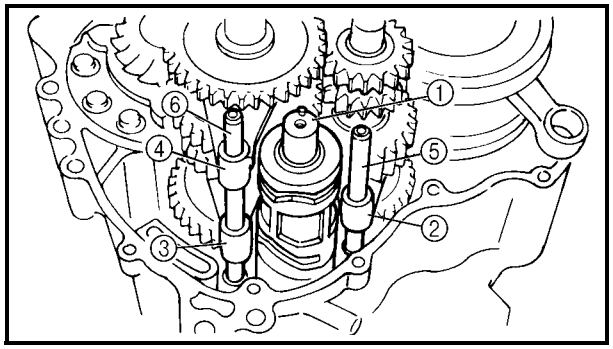


EBS00356

**INSTALLING THE TRANSMISSION**

1. Install:
   - shift drum ①
   - shift fork “C” ② (to main axle)
   - shift fork “R” ③ (to drive axle)
   - shift fork “L” ④ (to drive axle)
   - shift fork guide bar (short) ⑤
   - shift fork guide bar (long) ⑥

**NOTE:**

The embossed marks on the shift forks should face towards the right side of the engine and be in the following sequence: “R”, “C”, “L”. Be sure that the shift fork cam follower is properly seated in the shift drum groove.

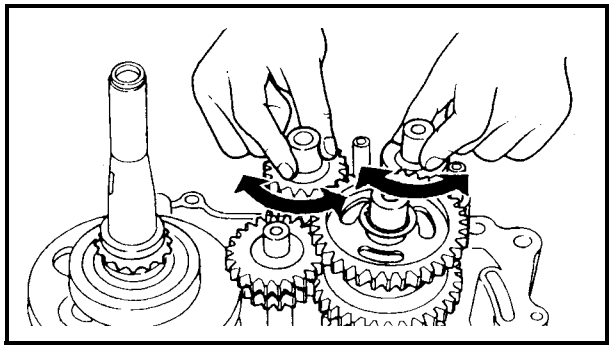

2. Check:
   - shift operation
     Unsmooth operation → Repair.

**NOTE:**
- Apply engine oil to each gear and bearing thoroughly.
- Before assembling the crankcase, make sure that the transmission is in neutral and that the gears turn freely.

# MIDDLE GEAR

## MIDDLE DRIVE PINION GEAR SHAFT

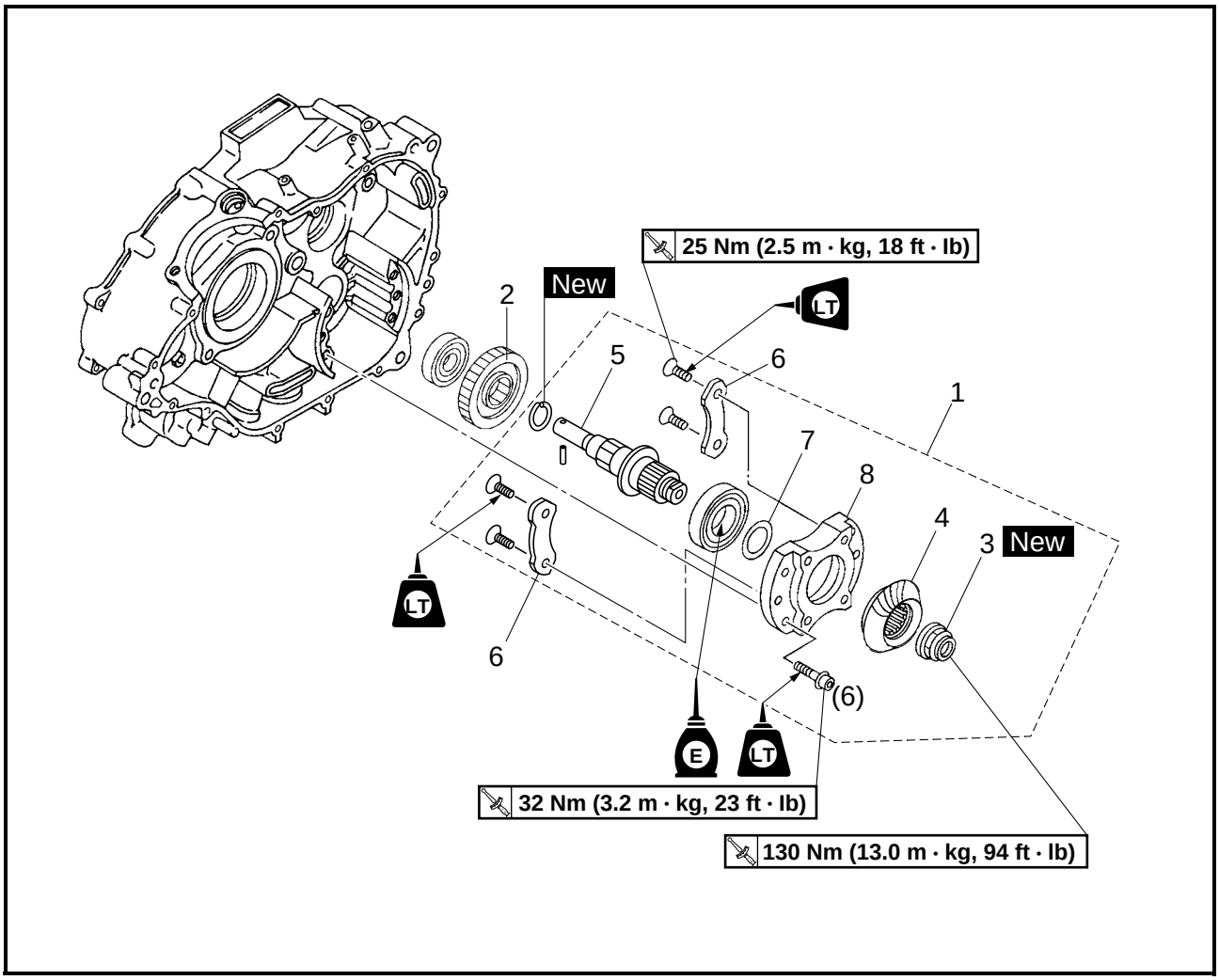


| Order | Job/Part | Q'ty | Remarks |
|---|---|---|---|
| | **Removing the middle drive pinion gear shaft** | | Remove the parts in the order listed. |
| | Crankcase separation | | Separate.<br>Refer to "CRANKCASE". |
| 1 | Middle drive pinion gear assembly | 1 | |
| 2 | Middle driven gear | 1 | |
| 3 | Middle drive pinion gear nut | 1 | |
| 4 | Middle drive pinion gear | 1 | Refer to "REMOVING THE MIDDLE DRIVE PINION GEAR SHAFT" and "INSTALLING THE MIDDLE DRIVE PINION GEAR SHAFT". |
| 5 | Middle drive pinion gear shaft | 1 | |
| 6 | Bearing retainer | 2 | |
| 7 | Middle drive pinion gear shim | * | Refer to "SELECTING THE MIDDLE DRIVE AND DRIVEN GEAR SHIMS". |

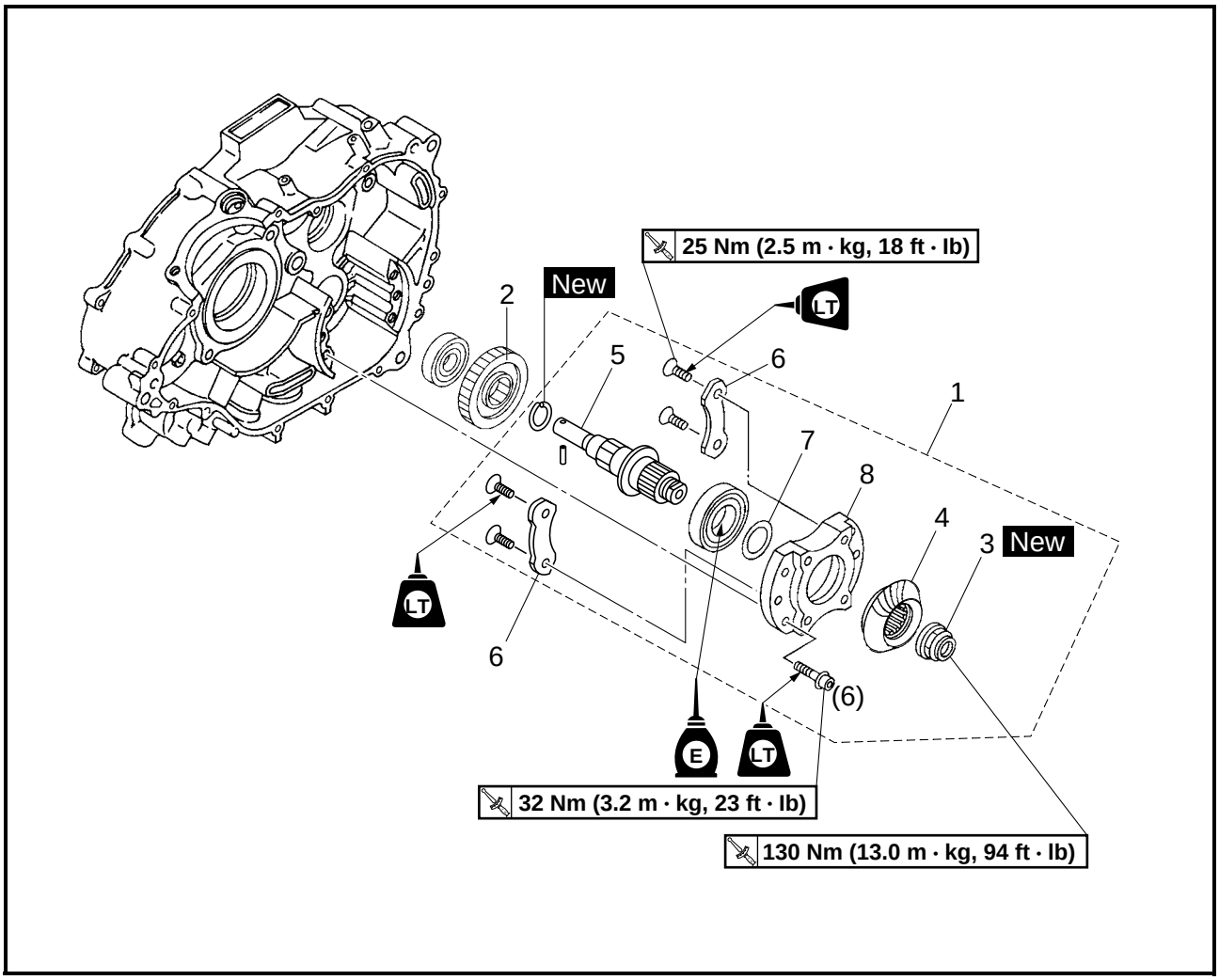


| Order | Job/Part | Q'ty | Remarks |
|---|---|---|---|
| 8 | Middle drive pinion gear shaft bearing housing | 1 | For installation, reverse the removal procedure. |

## MIDDLE DRIVEN SHAFT

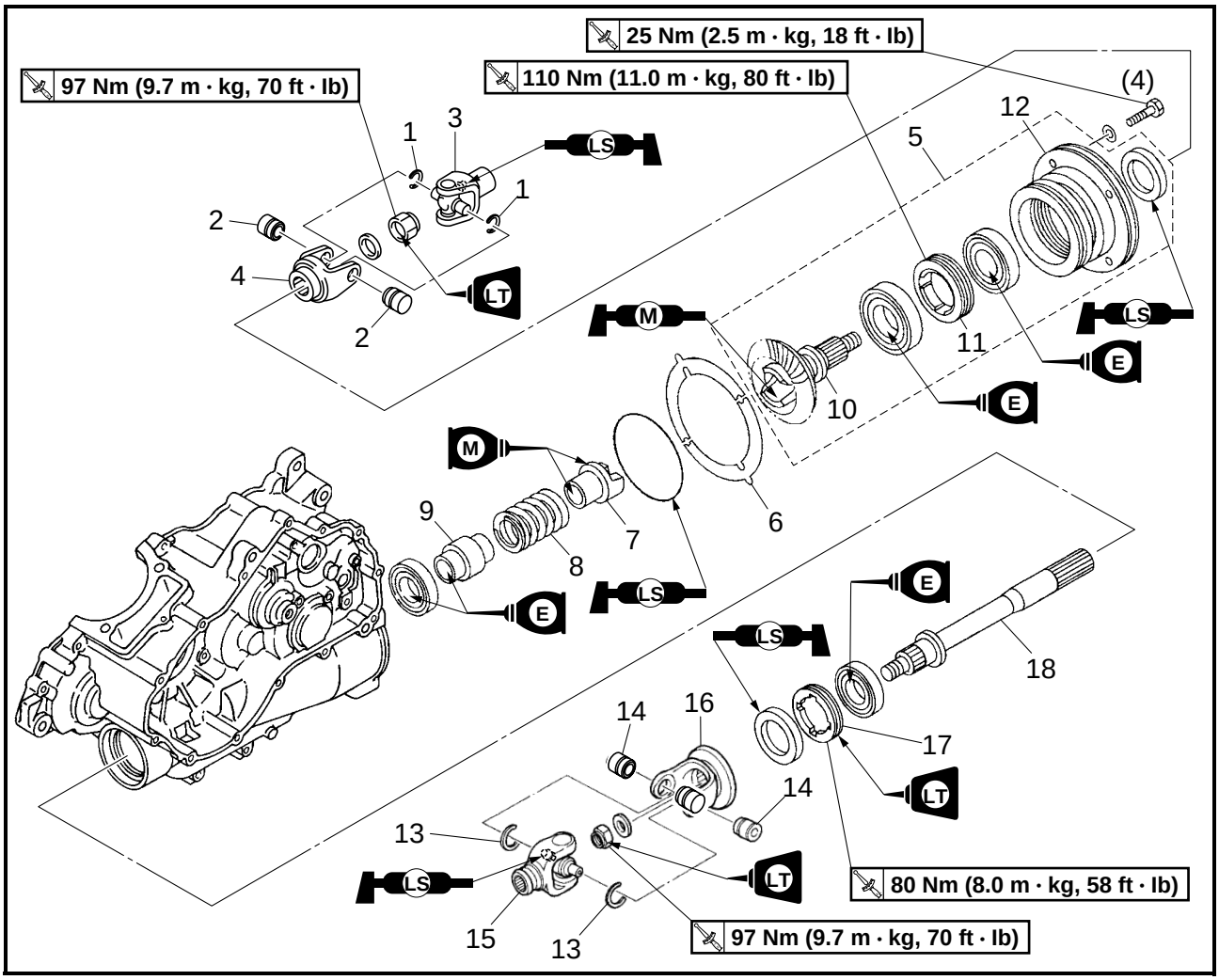


| Order | Job/Part | Q'ty | Remarks |
|---|---|---|---|
| | **Removing the middle driven shaft** | | Remove the parts in the order listed. |
| | Crankcase | | Separate.<br>Refer to "CRANKCASE". |
| 1 | Circlip | 2 | Refer to "REMOVING THE MIDDLE DRIVEN SHAFT" and "INSTALLING THE MIDDLE DRIVEN SHAFT". |
| 2 | Bearing | 2 | |
| 3 | Universal joint (rear) | 1 | |
| 4 | Universal joint yoke (rear) | 1 | |
| 5 | Middle driven pinion gear assembly | 1 | |
| 6 | Middle driven pinion gear shim | * | Refer to "SELECTING THE MIDDLE DRIVE AND DRIVEN GEAR SHIMS". |
| 7 | Damper cam | 1 | Refer to "REMOVING THE MIDDLE DRIVEN SHAFT" and "INSTALLING THE MIDDLE DRIVEN SHAFT". |
| 8 | Spring | 1 | |
| 9 | Gear coupling | 1 | |
| 10 | Middle driven pinion gear | 1 | |

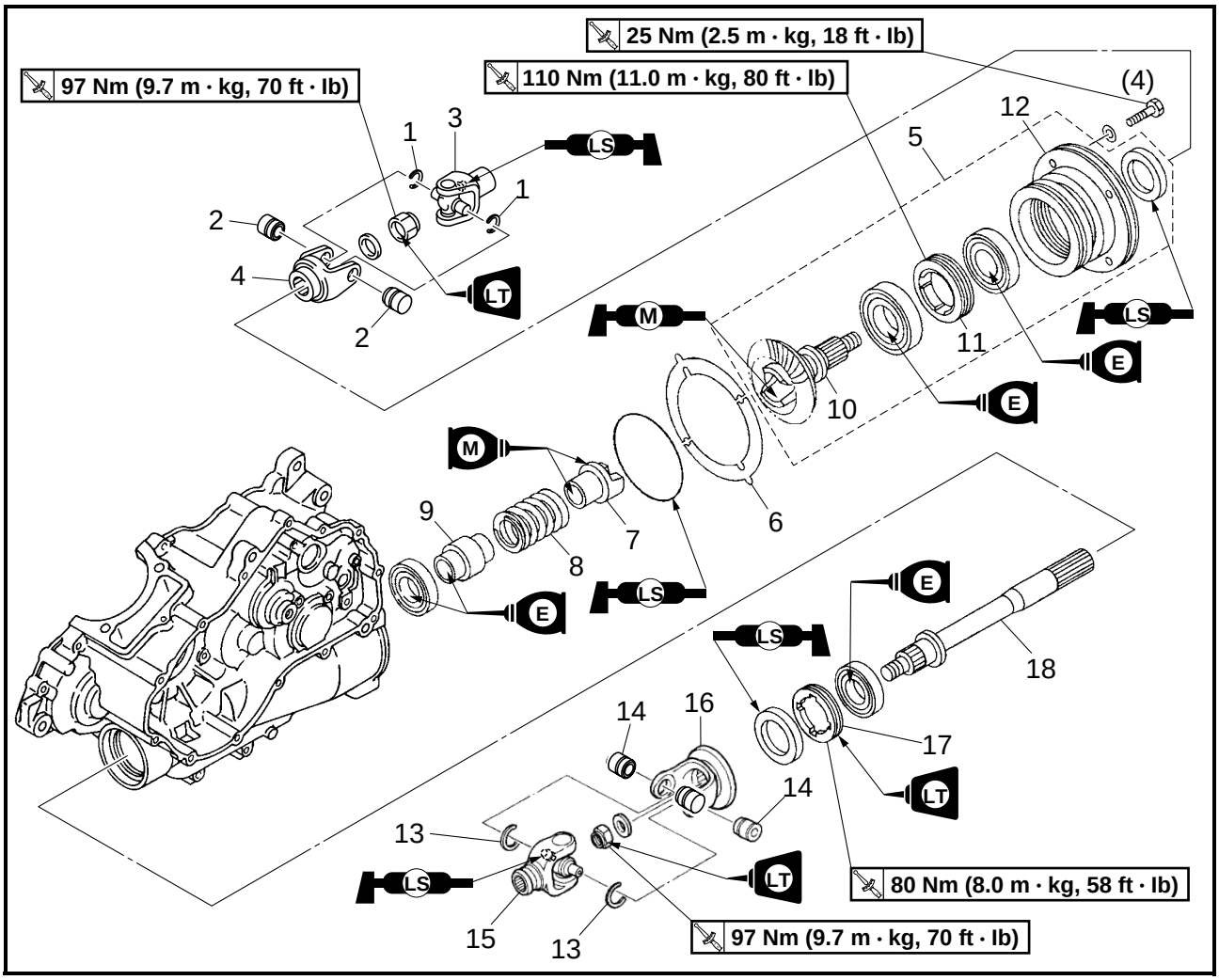


| Order | Job/Part | Q'ty | Remarks |
|---|---|---|---|
| 11 | Bearing retainer | 1 | Refer to "REMOVING THE MIDDLE DRIVEN SHAFT" and "INSTALLING THE MIDDLE DRIVEN SHAFT". |
| 12 | Bearing housing | 1 | |
| 13 | Circlip | 2 | |
| 14 | Bearing | 2 | |
| 15 | Universal joint (front) | 1 | |
| 16 | Universal joint yoke (front) | 1 | |
| 17 | Bearing retainer | 1 | |
| 18 | Middle driven shaft | 1 | |
| | | | For installation, reverse the removal procedure. |

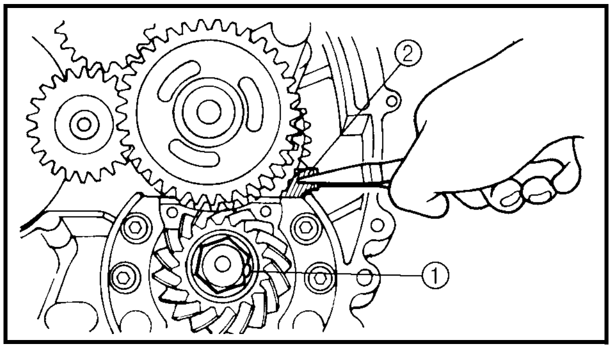


**REMOVING THE MIDDLE DRIVE PINION GEAR SHAFT**

1. Straighten:
   - punched portion of the middle drive pinion gear nut
2. Loosen:
   - middle drive pinion gear nut ①

**NOTE:**
Place a copper plate ② between the teeth of the drive gear and the driven gear to lock them.

3. Remove:
   - middle drive pinion gear nut
   - middle drive pinion gear
   - shim(s)

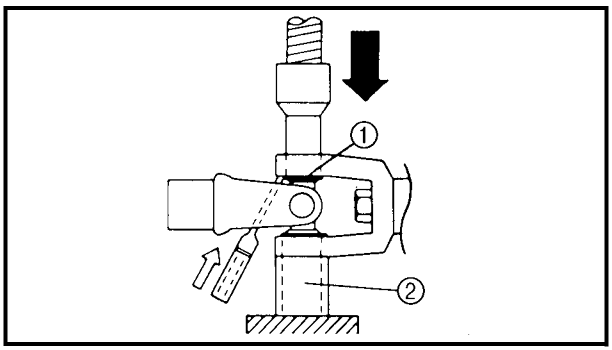


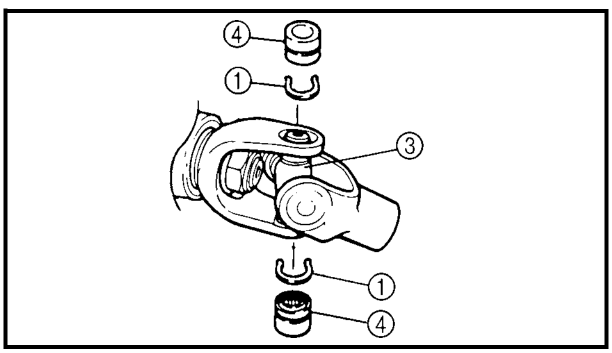


**REMOVING THE MIDDLE DRIVEN SHAFT**

1. Remove:
   - universal joints

▼▼▼▼▼▼▼▼▼▼▼▼▼▼▼▼▼▼▼▼▼▼▼▼▼▼▼▼▼▼▼▼▼▼

a. Remove the circlips ①.
b. Place the universal joint in a press.
c. With a suitable diameter pipe ② beneath the yoke ③, press the bearing ④ into the pipe as shown.

**NOTE:**
It may be necessary to lightly tap the yoke with a punch.

d. Repeat the steps for the opposite bearing.
e. Remove the yoke.

**NOTE:**
It may be necessary to lightly tap the yoke with a punch.

▲▲▲▲▲▲▲▲▲▲▲▲▲▲▲▲▲▲▲▲▲▲▲▲▲▲▲▲▲▲▲▲▲▲

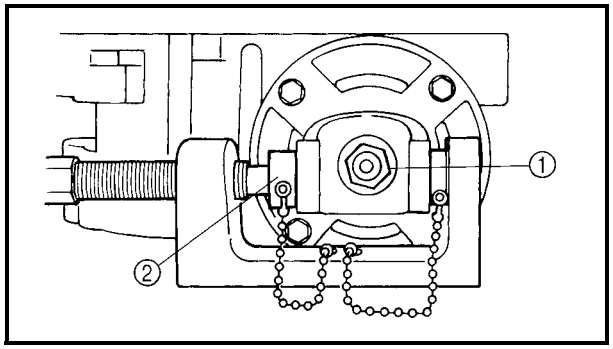


2. Remove:
   - middle driven pinion gear nut ①
   - washer
   - universal joint yoke (final gear side)

**NOTE:**
Use the universal joint holder ② to hold the universal joint yoke.

| | |
|---|---|
| | **Universal joint holder 90890-04062, YM-04062** |

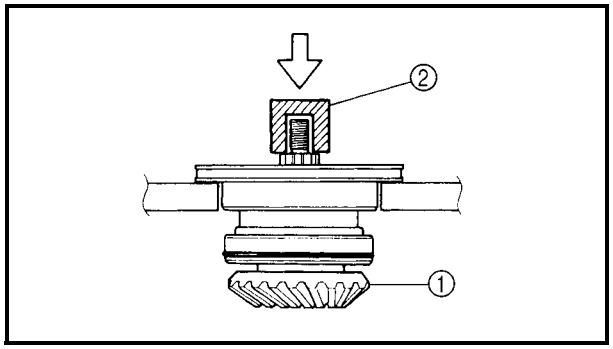


3. Remove:
   - middle driven pinion gear ①

▼▼▼▼▼▼▼▼▼▼▼▼▼▼▼▼▼▼▼▼▼▼▼▼▼▼▼▼▼▼▼▼▼▼

a. Clean the outside surface of the middle driven pinion gear.
b. Place the middle driven pinion gear onto a hydraulic press.

**CAUTION:**

- **Never directly press the middle driven pinion gear end with a hydraulic press, this will result in damage to the middle driven pinion gear thread.**
- **Install a suitable socket ② on the middle driven pinion gear end to protect the thread from damage.**

c. Press the middle driven pinion gear.

▲▲▲▲▲▲▲▲▲▲▲▲▲▲▲▲▲▲▲▲▲▲▲▲▲▲▲▲▲▲▲▲▲▲

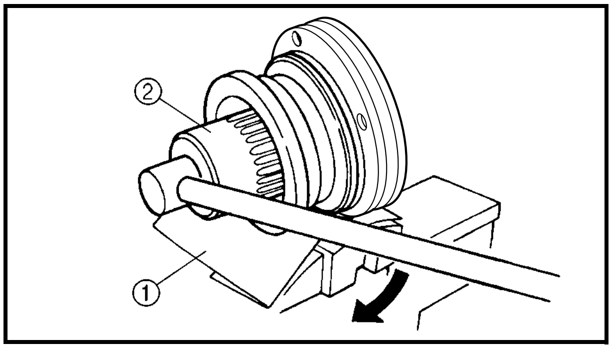


4. Remove:
   - bearing retainer
   - bearing

▼▼▼▼▼▼▼▼▼▼▼▼▼▼▼▼▼▼▼▼▼▼▼▼▼▼▼▼▼▼▼▼▼▼▼

a. Place a folded rag ①.
b. Secure the bearing housing edge in the vise.
c. Attach the bearing retainer wrench ②.

**Bearing retainer wrench**
**90890-04128**
**Middle gear bearing retainer**
**YM-04128**

**CAUTION:**

**The middle driven pinion gear bearing retainer has left-handed threads. To loosen the retainer turn it clockwise.**

d. Remove the bearing retainer and bearing.

▲▲▲▲▲▲▲▲▲▲▲▲▲▲▲▲▲▲▲▲▲▲▲▲▲▲▲▲▲▲▲▲▲▲▲

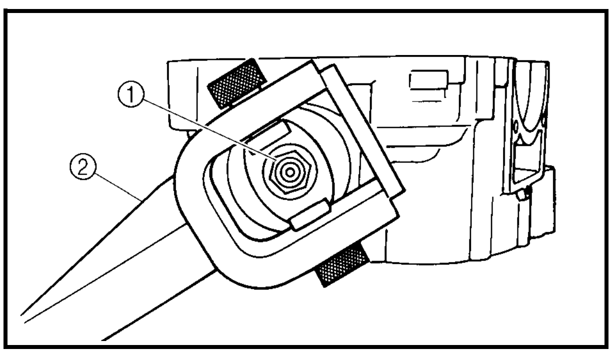


5. Remove:
   - middle driven shaft nut ①
   - washer
   - universal joint yoke (differential gear side)

**NOTE:**
Use the universal joint holder ② to hold the universal joint yoke.

**Universal joint holder**
**90890-04062, YM-04062**

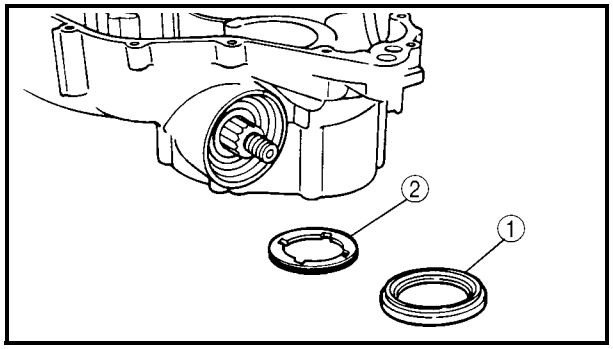


6. Remove:
   - oil seal ①
   - bearing retainer ②
   - bearing

**NOTE:**
Attach the ring nut wrench ③.

| | |
|---|---|
| | **Ring nut wrench**<br>**90890-01430, YM-38404** |

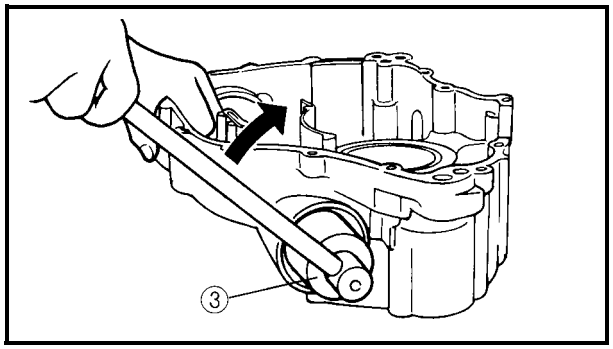


**CAUTION:**
**The middle drive shaft bearing retainer has left-handed threads. To loosen the retainer turn it clockwise.**

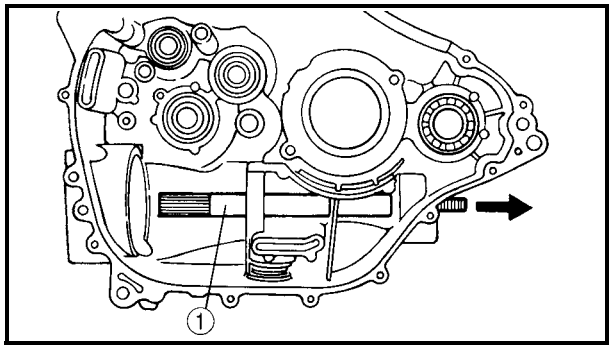


7. Remove:
   - middle drive shaft ①
     (with bearing)

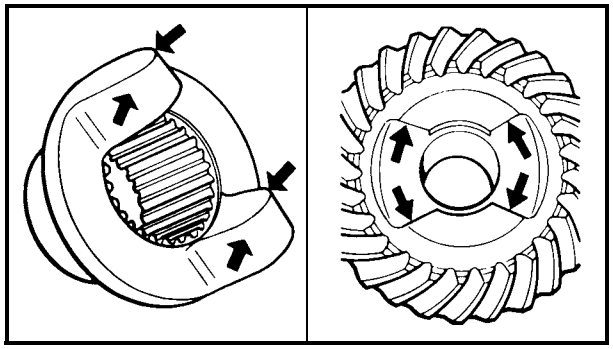

**CHECKING THE PINION GEARS**

1. Check:
   - damper cam surface
     Wear/scratches → Replace damper cam and driven pinion gear as a set.
2. Check:
   - damper spring
     Damage/cracks → Replace.
3. Check:
   - drive pinion gear teeth
   - driven pinion gear teeth
     Pitting/galling/wear → Replace.
4. Check:
   - O-ring
     Damage → Replace.
   - bearings
     Pitting/damage → Replace.
5. Check:
   - universal joint movement
     Roughness → Replace universal joint.

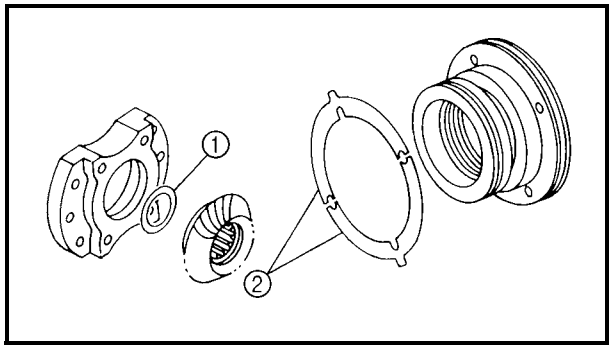


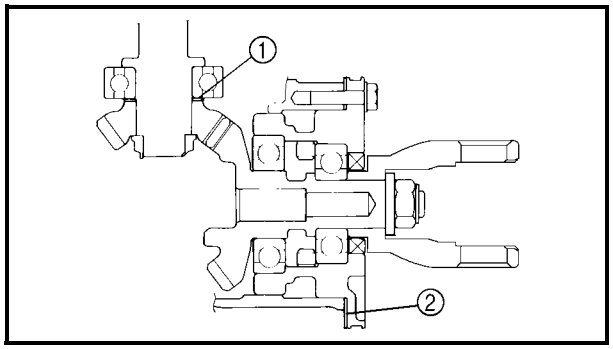


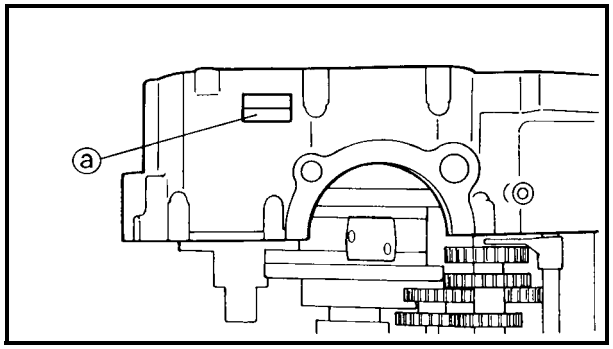


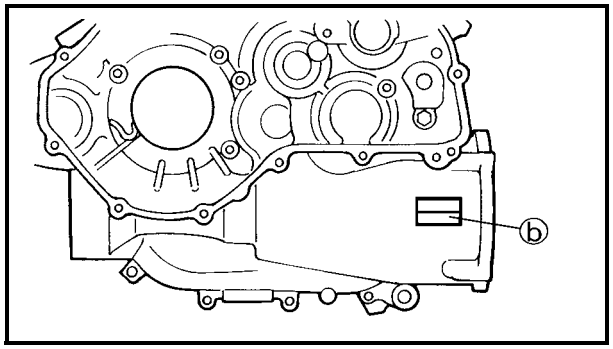


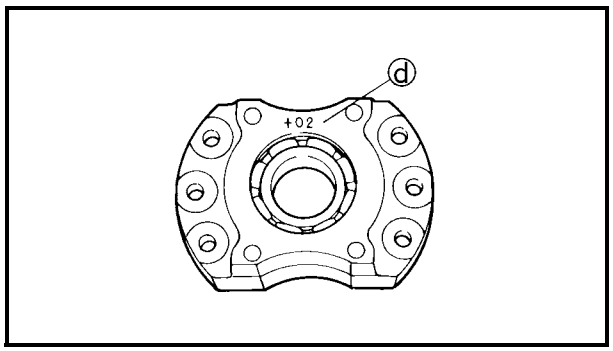


**SELECTING THE MIDDLE DRIVE AND DRIVEN GEAR SHIMS**

When the drive and driven gear, bearing housing assembly and/or crankcase are replaced, be sure to adjust the gear shims ① and ②.

1. Select:
   - middle drive pinion gear shim ①
   - middle driven pinion gear shim ②

▼▼▼▼▼▼▼▼▼▼▼▼▼▼▼▼▼▼▼▼▼▼▼▼▼▼▼▼▼▼▼▼▼▼▼▼▼▼

a. Position middle drive and driven pinion gear by using shims ① and ② with their respective thickness calculated from information marked on crankcase, bearing housing and drive pinion gear end.

① Shim thickness “A”
② Shim thickness “B”

b. To find shim thickness “A” use following formula:

**Middle drive pinion gear shim thickness:**
**“A” = ⓐ + ⓑ – ⓒ – ⓓ**

Where:

ⓐ = a numeral (usually a decimal number) on the right crankcase specifies a thickness of “6.4”.

ⓑ = a numeral (usually a decimal number) on the left crankcase specifies a thickness of “65”.

ⓒ = drive pinion gear to driven pinion gear center distance (considered constant “55”).

ⓓ = a numeral (usually a decimal number) on the bearing housing is either added to or substracted from “15.7”.

Example:

1) If the crankcase (right) is marked “6.38”, ..... ⓐ is 6.38
2) If the crankcase (left) is marked “65.01”, ..... ⓑ is 65.01
3) ⓒ is 55
4) If the bearing housing is marked “+02”, ..... ⓓ is 15.72
5) Therefore, the shim thickness is 0.67 mm.

A = 6.38 + 65.01 – 55 – 15.72
= 0.67

6) Round off hundredths digit and select appropriate shim(s).
   In the example above, the calculated shim thickness is 0.67 mm. The chart instructs you, however, to round off 7 to 5.

| Hundredths | Round value |
|---|---|
| 0, 1, 2 | 0 |
| 3, 4, 5, 6, 7 | 5 |
| 8, 9 | 10 |

Shims are supplied in the following thickness.

| Middle drive pinion gear shim | | |
|---|---|---|
| Thickness (mm) | 0.10<br>0.15<br>0.20 | 0.30<br>0.40<br>0.50 |

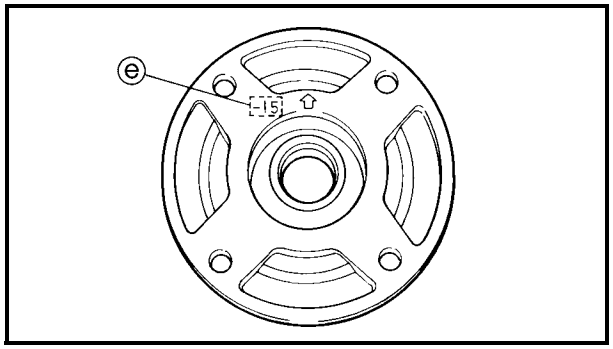


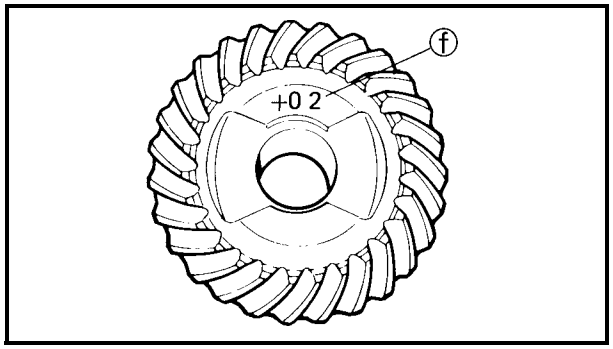


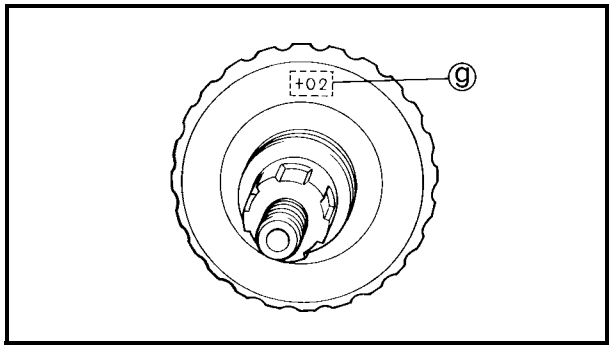


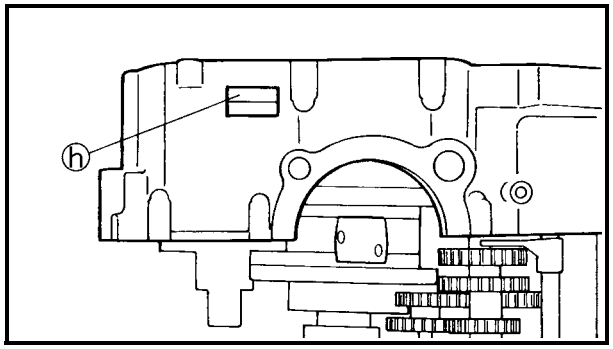


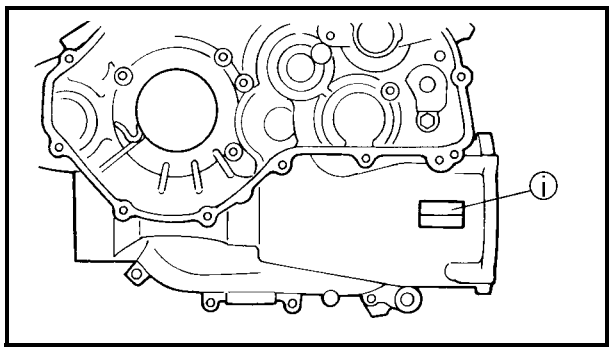


c. To find shim thickness “B” use the following formula:

**Middle driven pinion gear shim thickness:**
**“B” = ⓔ – ⓕ + ⓖ – ⓗ – ⓘ – 0.05**

Where:

ⓔ = a numeral (usually a decimal number) on the bearing housing is either added to or substracted from “76”.

ⓕ = a numeral (usually a decimal number) on the middle driven pinion gear is either added to or substracted from “59”.

ⓖ = a numeral (usually a decimal number) on the middle driven pinion gear is either added to or substracted from “79.5”.

ⓗ = a numeral (usually a decimal number) on the right crankcase specifies a thickness of “56.5”.

ⓘ = a numeral (usually a decimal number) on the left crankcase specifies a thickness of “39.1”.

Example:

1) If the bearing housing is marked “–15”,
   ..... ⓔ is 75.85
2) If the driven pinion gear is marked “+02”,
   ..... ⓕ is 59.02
3) If the driven pinion gear is marked “+02”,
   ..... ⓖ is 79.52
4) If the crankcase (right) is marked “56.49”,
   ..... ⓗ is 56.49
5) If the crankcase (left) is marked “39.09”,
   ..... ⓘ is 39.09
6) Therefore, the shim thickness is 0.72 mm.

B = 75.85 – 59.02 + 79.52 – 56.49 – 39.09 – 0.05
= 0.72

7) Round off hundredths digit and select appropriate shim(s).
   In the example above, the calculated shim thickness is 0.72 mm. The chart instructs you, however, to round off 2 to 0.

| Hundredths | Round value |
|---|---|
| 0, 1, 2 | 0 |
| 3, 4, 5, 6, 7 | 5 |
| 8, 9 | 10 |

Shims are supplied in the following thickness.

| Middle drive pinion gear shim | | |
|---|---|---|
| Thickness (mm) | 0.10<br>0.15<br>0.20<br>0.30 | 0.40<br>0.50<br>0.60 |

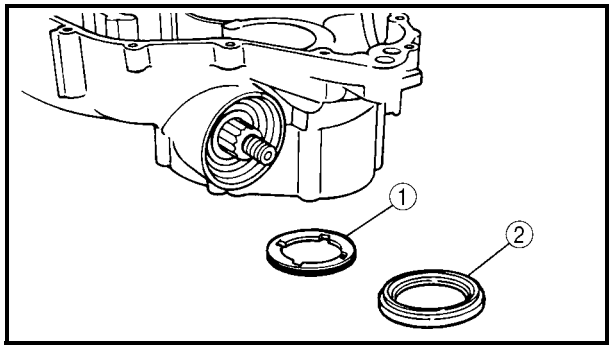


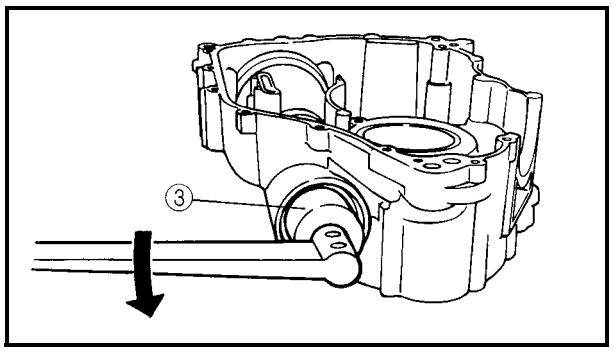


**INSTALLING THE MIDDLE DRIVEN SHAFT**

1. Install:
   - bearing retainer ① LT
     **80 Nm (8.0 m · kg, 58 ft · lb)**
   - oil seal ② New

**NOTE:**
Attach the ring nut wrench ③.

**Ring nut wrench**
**90890-01430, YM-38404**

**CAUTION:**
**The middle drive shaft bearing retainer has left-handed threads. To tighten the retainer, turn it counterclockwise.**

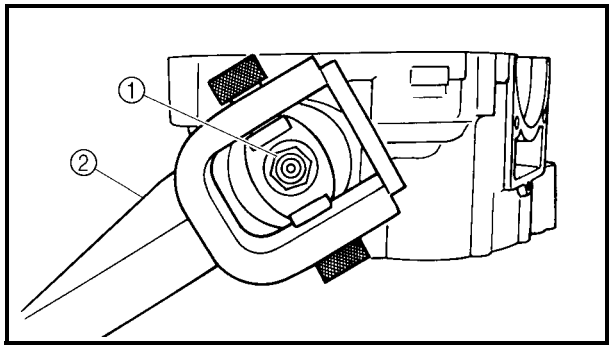


2. Install:
   - universal joint yoke (differential gear side)
   - washer
   - middle driven shaft nut ①

| | |
|---|---|
| LT | 97 Nm (9.7 m · kg, 70 ft · lb) |

**NOTE:**
Use the universal joint holder ② to hold the universal joint yoke.

| | |
|---|---|
| | **Universal joint holder**<br>**90890-04062, YM-04062** |

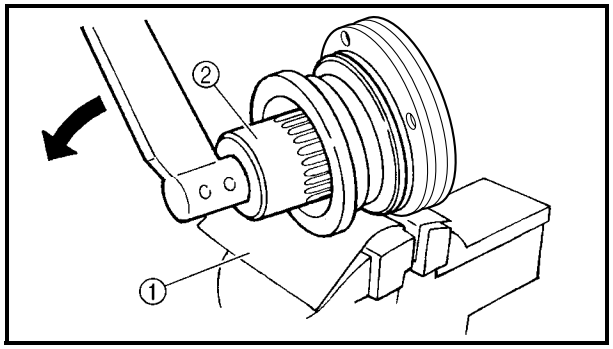


3. Install:
   - bearing
   - bearing retainer LT
   - oil seal New

▼▼▼▼▼▼▼▼▼▼▼▼▼▼▼▼▼▼▼▼▼▼▼▼▼▼▼▼▼▼▼▼▼▼

a. Attach the folded rag ①.
b. Secure the bearing housing edge in the vise.
c. Attach the bearing retainer wrench ②.

| | |
|---|---|
| | **Bearing retainer wrench**<br>**90890-04128**<br>**Middle gear bearing retainer**<br>**YM-04128** |

d. Tighten the bearing retainer.

**CAUTION:**
**The middle driven pinion gear bearing retainer has left-handed threads. To tighten the retainer, turn it counterclockwise.**

| | |
|---|---|
| | **Bearing retainer**<br>**110 Nm (11.0 m · kg, 80 ft · lb)** |

▲▲▲▲▲▲▲▲▲▲▲▲▲▲▲▲▲▲▲▲▲▲▲▲▲▲▲▲▲▲▲▲▲▲

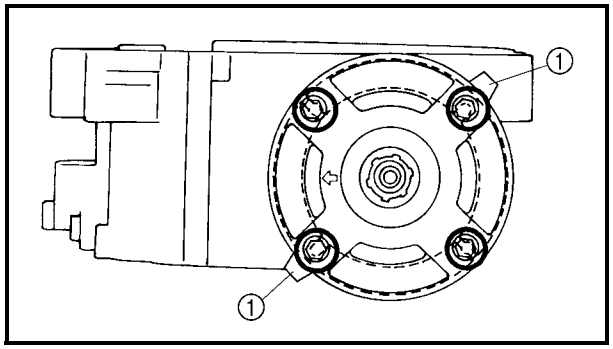


4. Install:
   - middle driven pinion gear shims ①
   - bearing housing

| 25 Nm (2.5 m · kg, 18 ft · lb) |
|---|

**NOTE:**
Install the shims so that the tabs are positioned as shown in the illustration.

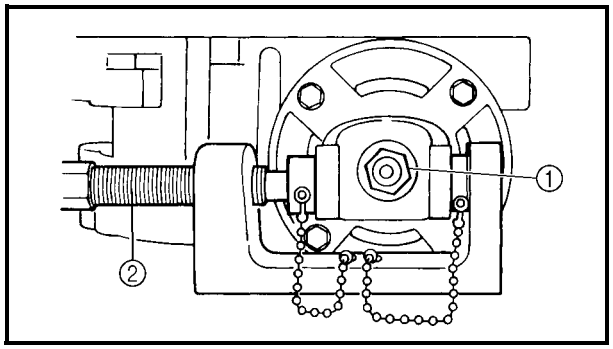


5. Install:
   - universal joint yoke (final gear side)
   - washer
   - middle driven pinion gear nut ①

| 97 Nm (9.7 m · kg, 70 ft · lb) |
|---|

**NOTE:**
Use the universal joint holder ② to hold the yoke.

| Universal joint holder<br>90890-04062, YM-04062 |
|---|

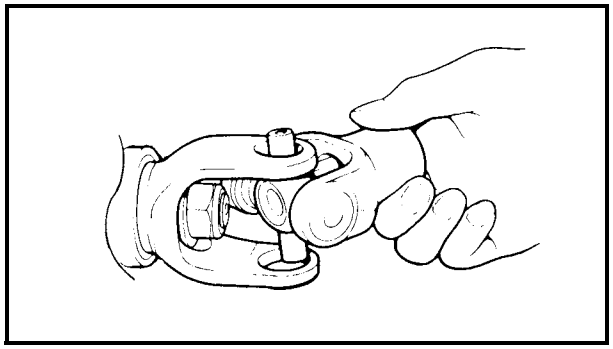

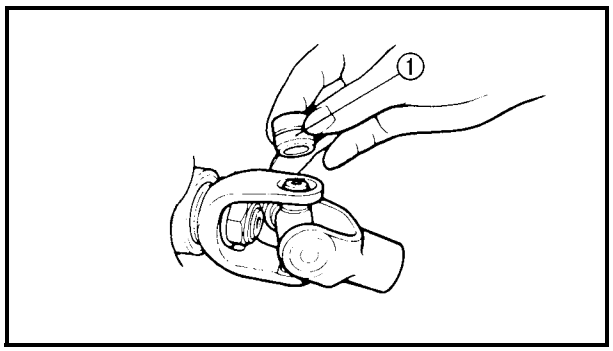


6. Install:
   - universal joint

▼▼▼▼▼▼▼▼▼▼▼▼▼▼▼▼▼▼▼▼▼▼▼▼▼▼▼▼▼▼▼▼▼▼

a. Install the opposite yoke into the universal joint.
b. Apply wheel bearing grease to the bearings.
c. Install the bearing ① onto the yoke.

**CAUTION:**
**Check each bearing. The needles can easily fall out of their races. Slide the yoke back and forth on the bearings; the yoke will not go all the way onto a bearing if a needle is out of place.**

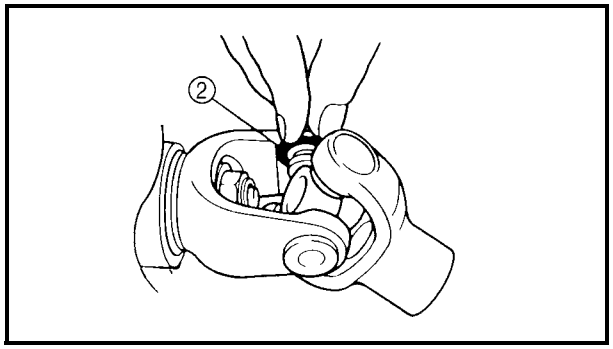


d. Press each bearing into the universal joint using a suitable socket.

**NOTE:**
The bearing must be inserted far enough into the universal joint so that the circlip can be installed.

e. Install the circlips ② into the groove of each bearing.

▲▲▲▲▲▲▲▲▲▲▲▲▲▲▲▲▲▲▲▲▲▲▲▲▲▲▲▲▲▲▲▲▲▲

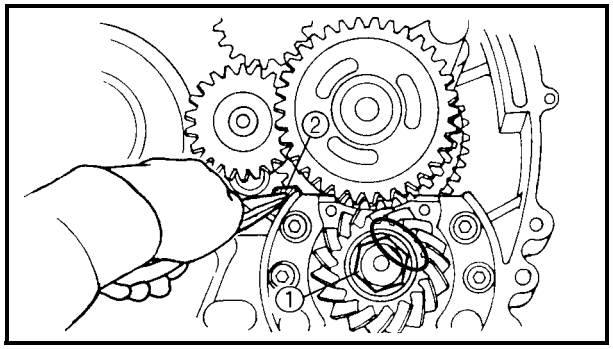


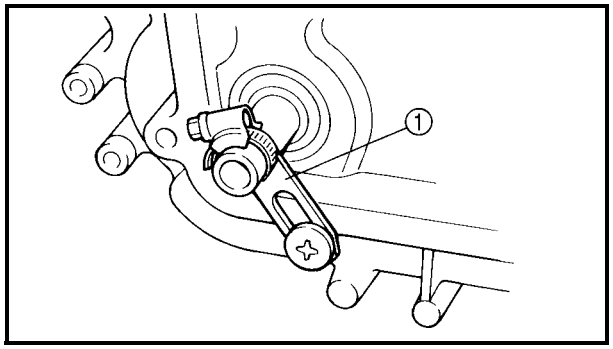


**INSTALLING THE MIDDLE DRIVE PINION GEAR SHAFT**

1. Tighten:
   - middle drive pinion gear nut ① New

| | |
|---|---|
| | **130 Nm (13.0 m · kg, 94 ft · lb)** |

**NOTE:**
Place a copper plate ② between teeth of the middle drive gear and driven gear to lock them.

2. Stake the threads with a drift punch.

**MEASURING THE MIDDLE GEAR BACKLASH**

1. Measure:
   - gear lash

| | |
|---|---|
| | **Middle gear lash**<br>**0.1 ~ 0.3 mm (0.004 ~ 0.012 in)** |

▼▼▼▼▼▼▼▼▼▼▼▼▼▼▼▼▼▼▼▼▼▼▼▼▼▼▼▼▼▼▼▼▼▼

a. Temporarily install the left crankcase.
b. Attach the pinion gear fix clamp ① to the middle drive shaft.

| | |
|---|---|
| | **Pinion gear fix clamp**<br>**90890-04129**<br>**Pinion gear clamp**<br>**YM-04129** |

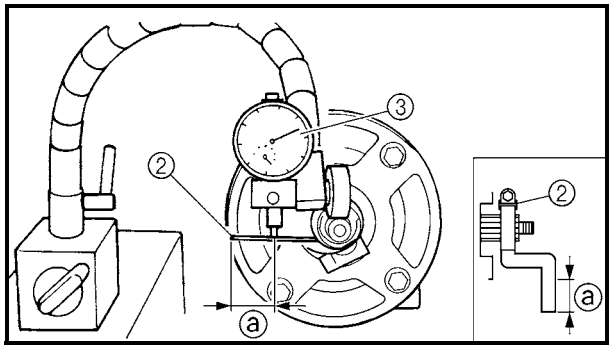


c. Attach the gear lash measurement tool ② and dial gauge ③.

| | |
|---|---|
| | **Gear lash measurement tool 90890-01467, YM-01467** |

ⓐ 8.25 mm (0.32 in)

d. Measure the gear lash while rotating the middle driven pinion gear back and forth.

**NOTE:**

Measure the gear lash at 4 positions. Rotate the middle driven pinion gear 90° each time.

e. If the gear lash is incorrect, adjust the gear lash by middle driven pinion gear shims and/or middle drive pinion gear shim(s).

▲▲▲▲▲▲▲▲▲▲▲▲▲▲▲▲▲▲▲▲▲▲▲▲▲▲▲▲▲▲▲▲▲▲

# CARBURETOR

## CARBURETOR

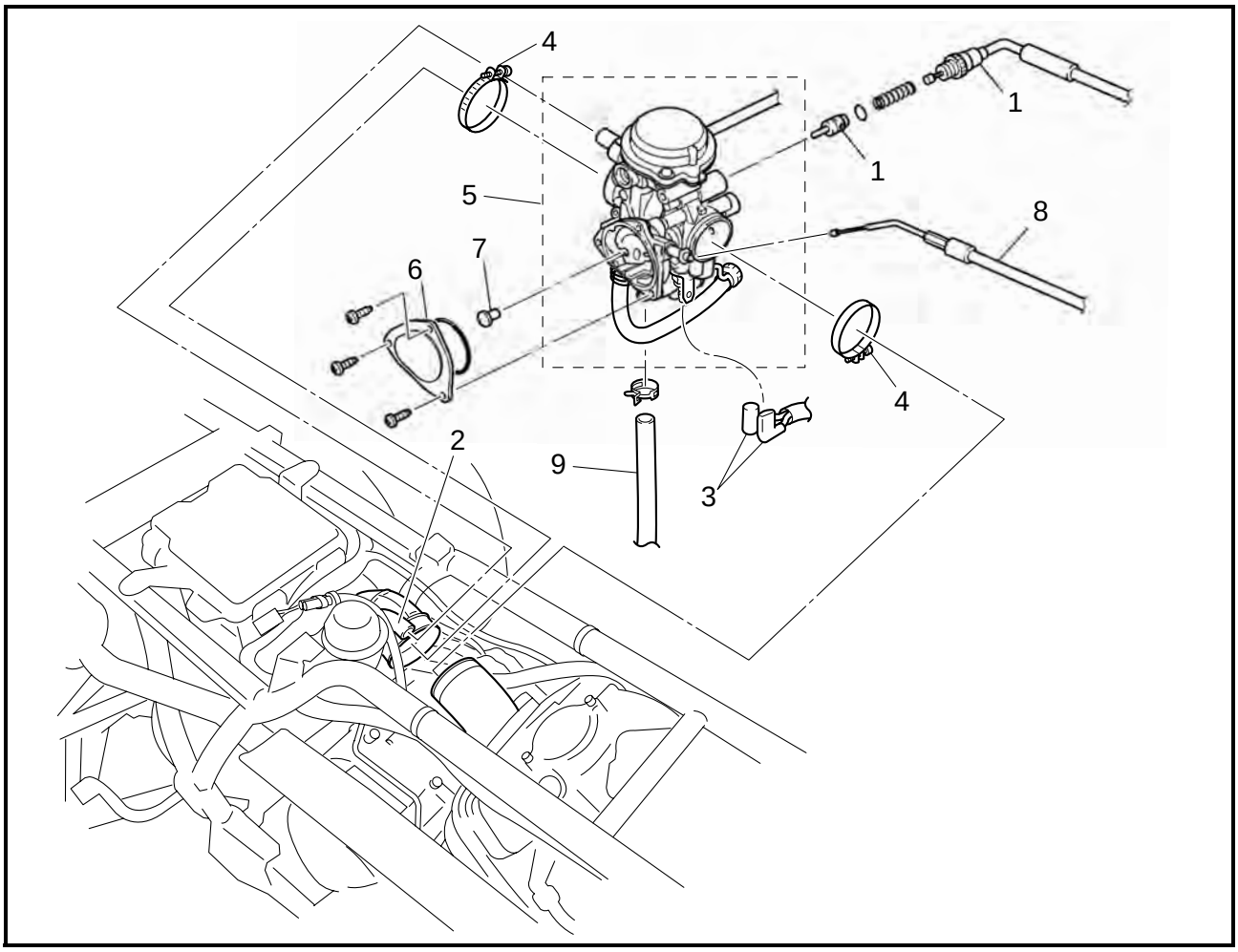


| Order | Job/Part | Q'ty | Remarks |
|---|---|---|---|
| | **Removing the carburetor** | | Remove the parts in the order listed. |
| | Seat/front fender/fuel tank | | Refer to "SEAT, CARRIERS, FENDERS, FUEL TANK AND AIR FILTER" in chapter 3. |
| 1 | Starter cable/starter plunger | 1/1 | |
| 2 | Vacuum chamber breather hose | 1 | Disconnect. |
| 3 | Carburetor warmer connector | 2 | Disconnect. |
| 4 | Clamp screw | 2 | Loosen. |
| 5 | Carburetor assembly | 1 | |
| 6 | Throttle valve cover | 1 | |
| 7 | Throttle cable end | 1 | |
| 8 | Throttle cable | 1 | **NOTE:** After removing the carburetor assembly, remove the throttle cable. |

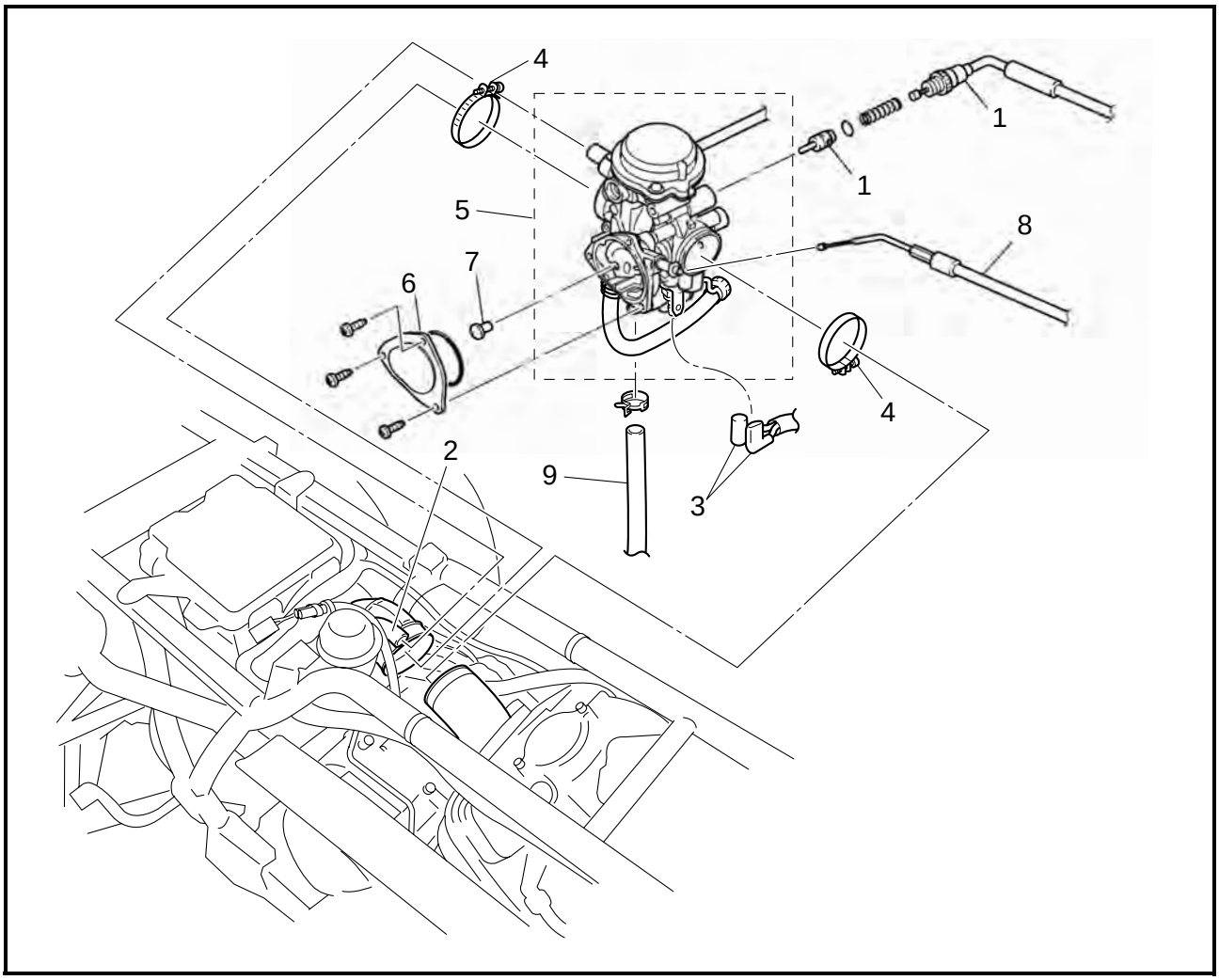


| Order | Job/Part | Q'ty | Remarks |
|---|---|---|---|
| 9 | Carburetor overflow hose | 1 | For installation, reverse the removal procedure. |

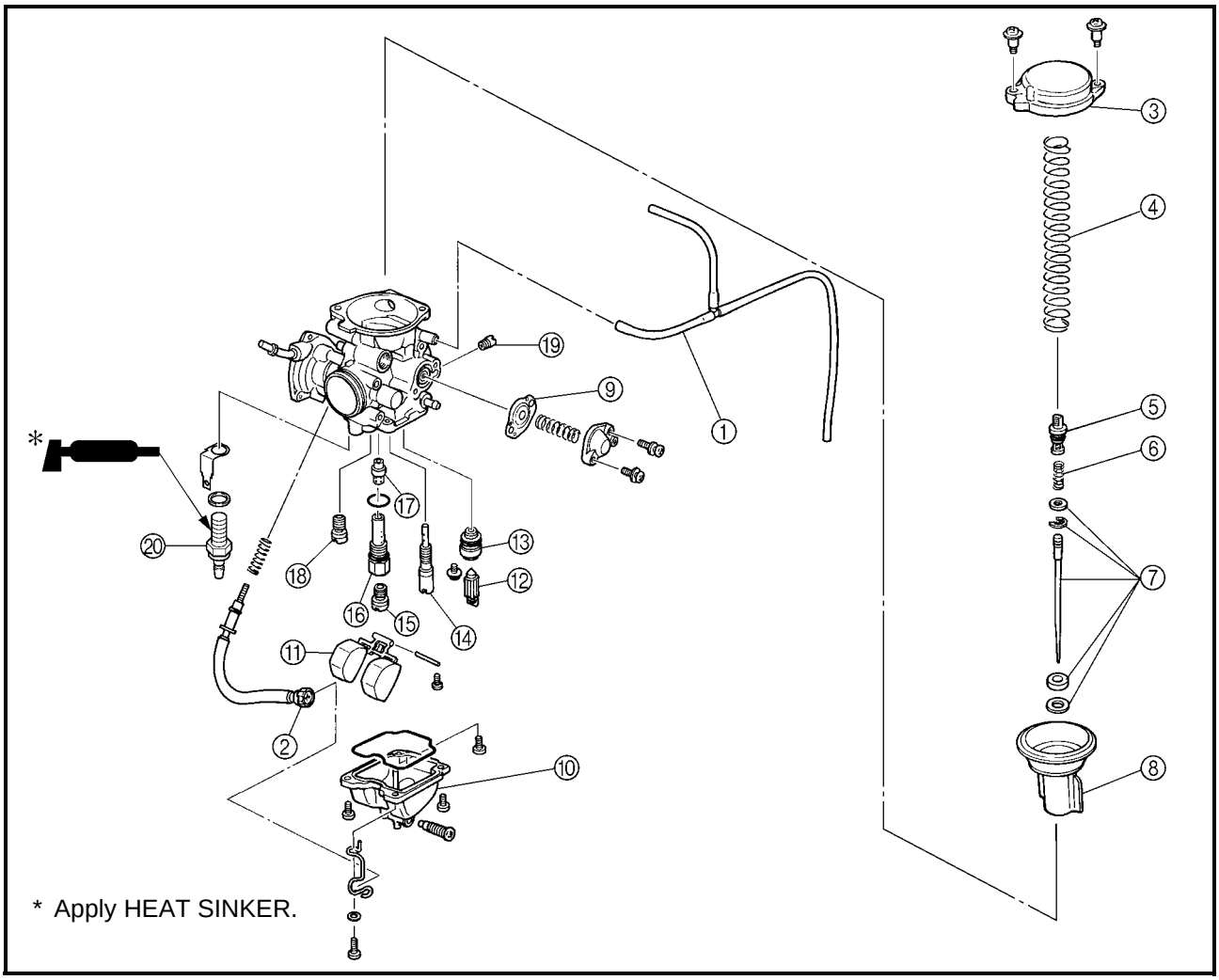


| Order | Job/Part | Q'ty | Remarks |
|---|---|---|---|
| | **Disassembling the carburetor** | | Remove the parts in the order listed.<br>**NOTE:**<br>Before disassembling the carburetor, make sure to note the number of times the pilot screw is turned out from the seated position to its set position. |
| ① | Vacuum chamber air vent hose | 1 | |
| ② | Throttle stop screw | 1 | |
| ③ | Vacuum chamber cover | 1 | |
| ④ | Spring | 1 | |
| ⑤ | Jet needle holder | 1 | |
| ⑥ | Spring | 1 | |
| ⑦ | Jet needle set | 1 | |
| ⑧ | Piston valve | 1 | |

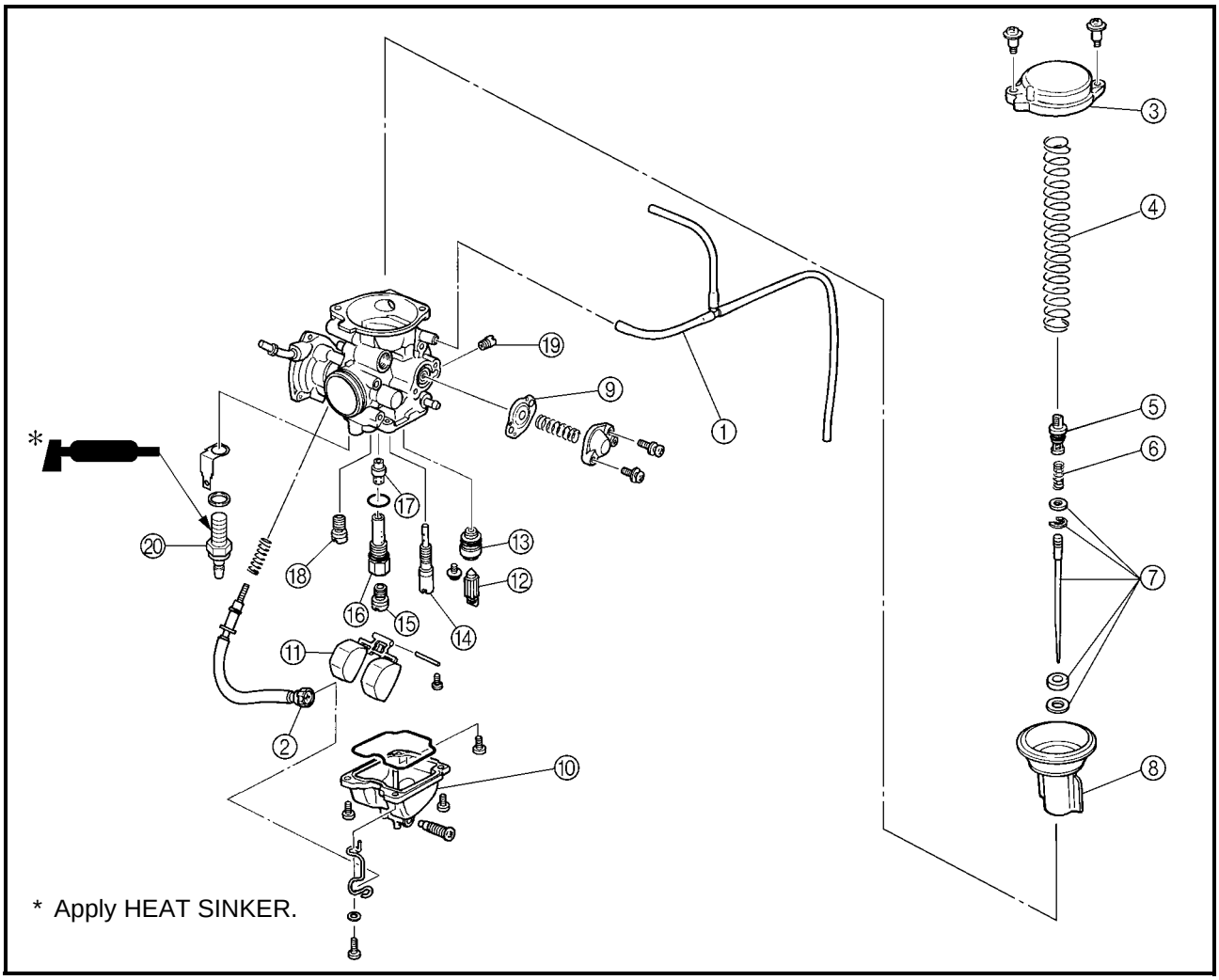


| Order | Job/Part | Q'ty | Remarks |
|---|---|---|---|
| ⑨ | Coasting enricher diaphragm | 1 | |
| ⑩ | Float chamber | 1 | |
| ⑪ | Float | 1 | Refer to "ASSEMBLING THE CARBURETOR". |
| ⑫ | Needle valve | 1 | |
| ⑬ | Valve seat | 1 | |
| ⑭ | Pilot jet | 1 | |
| ⑮ | Main jet | 1 | |
| ⑯ | Needle jet holder | 1 | |
| ⑰ | Needle jet | 1 | |
| ⑱ | Starter jet | 1 | |
| ⑲ | Pilot air jet | 1 | |
| ⑳ | Carburetor warmer | 1 | |
| | | | For assembly, reverse the disassembly procedure. |

## DISASSEMBLING THE CARBURETOR

**NOTE:**

Before disassembling the carburetor, make sure to note the number of times the pilot screw is turned out from the seated position to its set position.

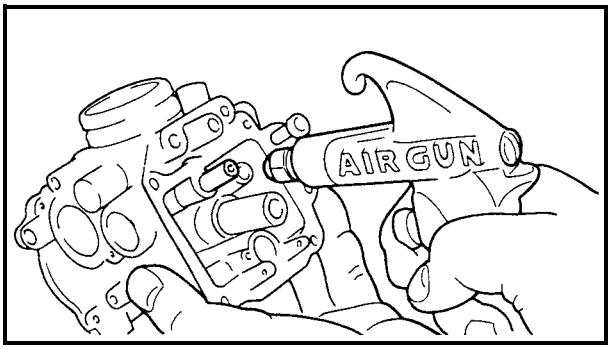


## CHECKING THE CARBURETOR

1. Check:
   - carburetor body
   - float chamber
     Cracks/damage → Replace.
   - fuel passage
     Contamination → Clean as indicated.
   - carburetor body
     Contamination → Clean.

▼▼▼▼▼▼▼▼▼▼▼▼▼▼▼▼▼▼▼▼▼▼▼▼▼▼▼▼▼▼▼▼▼▼

a. Wash the carburetor in a petroleum-based solvent. Do not use any caustic carburetor cleaning solution.
b. Blow out all of the passages and jets with compressed air.

▲▲▲▲▲▲▲▲▲▲▲▲▲▲▲▲▲▲▲▲▲▲▲▲▲▲▲▲▲▲▲▲▲▲

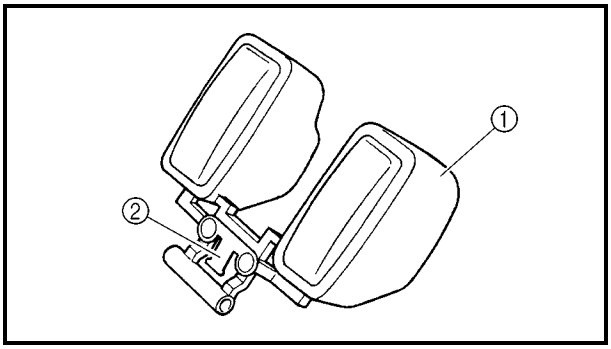


2. Check:
   - float ①
   - float tang ②
     Damage → Replace.

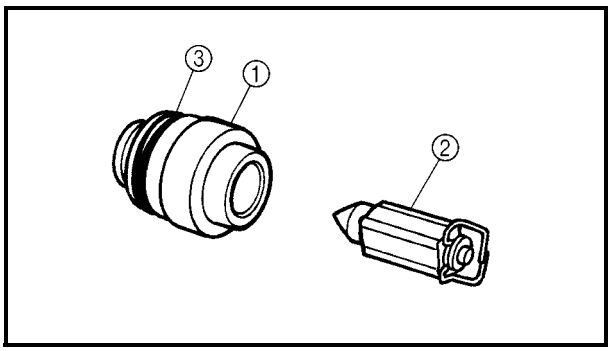


3. Check:
   - valve seat ①
   - needle valve ②
   - O-ring ③
     Contamination/wear/damage → Replace as a set.

**NOTE:**

Always replace the needle valve and valve seat as a set.

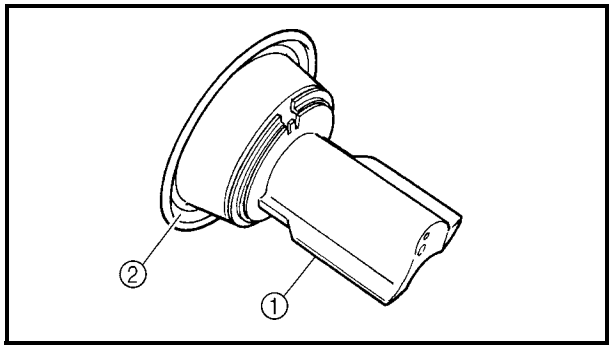


4. Check:
   - piston valve ①
     Scratches/wear/damage → Replace.
   - rubber diaphragm ②
     Tears → Replace.

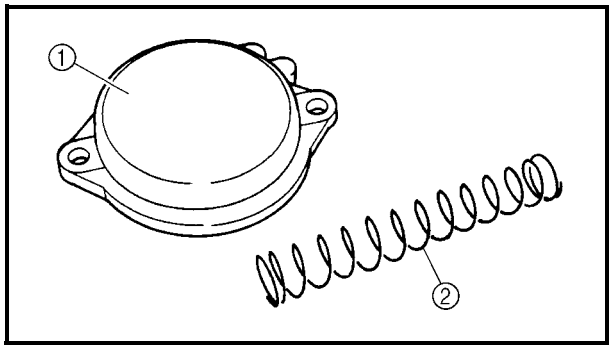


5. Check:
   - vacuum chamber cover ①
   - spring ②
     Cracks/damage → Replace.

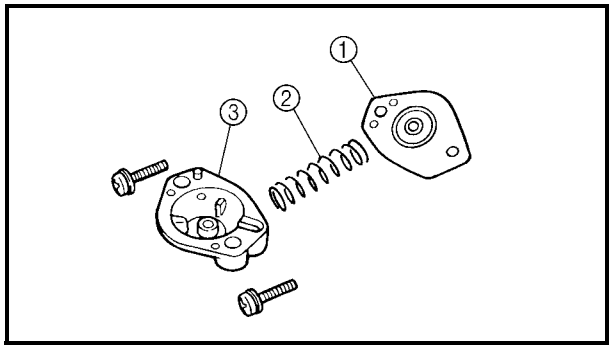


6. Check:
   - diaphragm (coasting enricher) ①
   - spring ②
   - cover ③
     Tears (diaphragm)/damage → Replace.

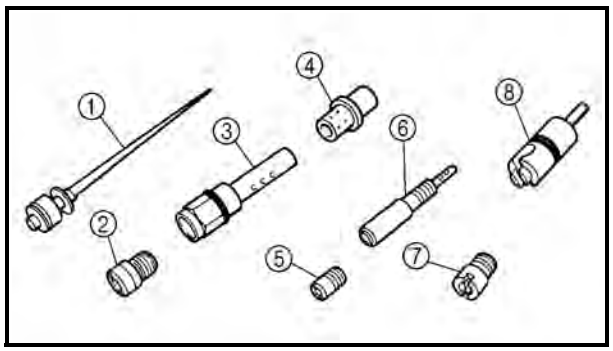


7. Check:
   - jet needle ①
   - main jet ②
   - needle jet holder ③
   - needle jet ④
   - pilot air jet ⑤
   - pilot jet ⑥
   - starter jet ⑦
   - starter plunger ⑧
     Bends/wear/damage → Replace.
     Blockage → Blow out the jets with compressed air.

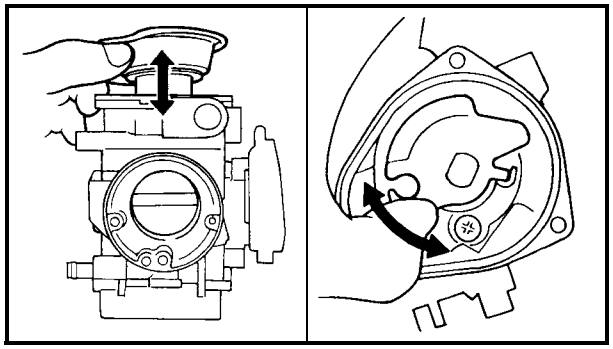

8. Check:
   - free movement (piston valve)
     Sticks → Replace the piston valve guide and the piston valve.
     Insert the piston valve into the carburetor body, and check for free movement.
9. Check:
   - free movement (throttle valve)
     Sticks → Replace.

### ASSEMBLING THE CARBURETOR

**NOTE:**
Before assembling the carburetor, make sure to turn out the pilot screw the same number of times, as noted before disassembly, from the seated position to the set position.

**CAUTION:**
**Before reassembling, wash all of the parts in a clean petroleum-based solvent.**

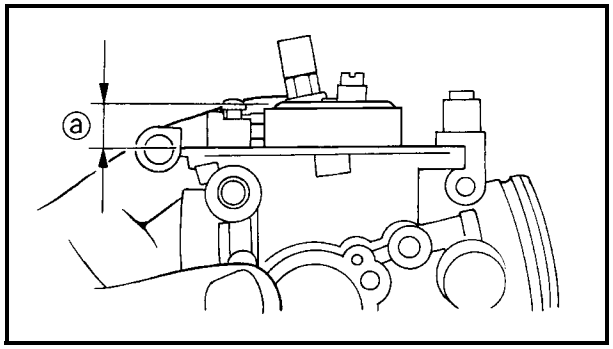


1. Measure:
   - float height ⓐ
     Out of specification → Adjust.

| | |
|---|---|
| | **Float height**<br>**13.0 mm (0.51 in)** |

▼▼▼▼▼▼▼▼▼▼▼▼▼▼▼▼▼▼▼▼▼▼▼▼▼▼▼▼▼▼▼▼▼▼▼▼

a. Hold the carburetor in an upside down position.
b. Measure the distance from the mating surface of the float chamber (gasket removed) to the top of the float.

**NOTE:**
The float arm should be resting on the needle valve, but not compressing it.

c. If the float height is not within the specification, check the valve seat and needle valve.
d. If either is worn, replace them both.
e. If both are fine, adjust the float height by bending the float tang ① on the float.
f. Recheck the float height.

▲▲▲▲▲▲▲▲▲▲▲▲▲▲▲▲▲▲▲▲▲▲▲▲▲▲▲▲▲▲▲▲▲▲▲▲

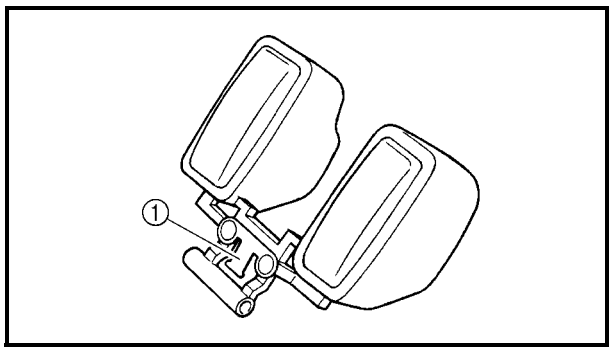

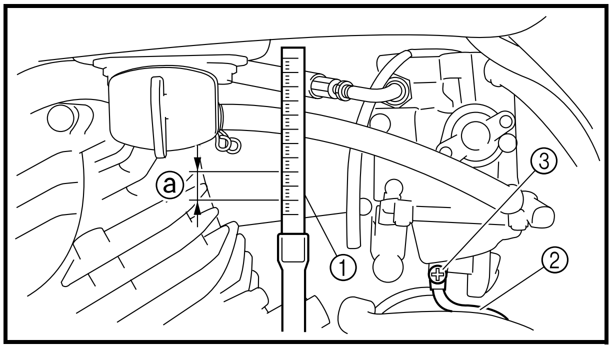


### ADJUSTING THE FUEL LEVEL

1. Measure:
   • fuel level ⓐ
   Out of specification → Adjust.

**Fuel level**
**4.0 ~ 5.0 mm (0.16 ~ 0.20 in)**
**Above the float chamber mating surface**

▼▼▼▼▼▼▼▼▼▼▼▼▼▼▼▼▼▼▼▼▼▼▼▼▼▼▼▼▼▼▼▼▼▼

a. Place the vehicle on a level surface.
b. Connect the fuel level gauge ① to the drain pipe ②.

**Fuel level gauge**
**90890-01312, YM-01312-A**

c. Loosen the drain screw ③.
d. Hold the gauge vertically next to the float chamber line.
e. Measure the fuel level ⓐ with the gauge.
f. If the fuel level is incorrect, adjust the fuel level.
g. Remove the carburetor.
h. Check the valve seat and needle valve.
i. If either is worn, replace them both.
j. If both are fine, adjust the float level by bending the float tang ④ slightly.
k. Install the carburetor.
l. Recheck the fuel level.

▲▲▲▲▲▲▲▲▲▲▲▲▲▲▲▲▲▲▲▲▲▲▲▲▲▲▲▲▲▲▲▲▲▲

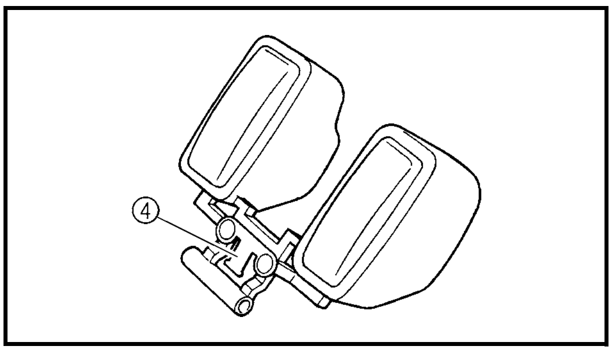

EBS00155

# DRIVE TRAIN

## TROUBLESHOOTING

The following conditions may indicate damaged shaft drive components:

| Symptoms | Possible Causes |
|---|---|
| 1. A pronounced hesitation or “jerky” movement during acceleration, deceleration or sustained speed. (This must not be confused with engine surging or transmission characteristics.)<br>2. A “rolling rumble” noticeable at low speed; a high-pitched whine; a “clunk” from a shaft drive component or area.<br>3. A locked-up condition of the shaft drive train mechanism, no power transmitted from the engine to the front and/or rear wheel. | A. Bearing damage.<br>B. Improper gear lash.<br>C. Gear tooth damage.<br>D. Broken drive shaft.<br>E. Broken gear teeth.<br>F. Seizure due to lack of lubrication.<br>G. Small foreign objects lodged between the moving parts. |

**NOTE:**

Areas A, B, and C above may be extremely difficult to diagnose. The symptoms are quite subtle and difficult to distinguish from normal vehicle operating noise. If there is reason to believe these components are damaged, remove the components and check them.

EBS00156

### CHECKING NOISES

1. Investigate any unusual noises.

▼▼▼▼▼▼▼▼▼▼▼▼▼▼▼▼▼▼▼▼▼▼▼▼▼▼▼▼▼▼▼▼▼▼

a. A “rolling rumble” noise during coasting, acceleration, or deceleration. The noise increases with front and/or rear wheel speed, but it does not increase with higher engine or transmission speeds.
   Diagnosis: Possible wheel bearing damage.
b. A “whining” noise that varies with acceleration and deceleration.
   Diagnosis: Possible incorrect reassembly, too-little gear lash.

**CAUTION:**

**Too little gear lash is extremely destructive to the gear teeth. If a test ride following reassembly indicates this condition, stop riding immediately to minimize gear damage.**

c. A slight “thunk” evident at low speed operation. This noise must be distinguished from normal vehicle operation.
   Diagnosis: Possible broken gear teeth.

**WARNING**

**Stop riding immediately if broken gear teeth are suspected. This condition could result in the shaft drive assembly locking up, causing loss of control of the vehicle and possible injury to the rider.**

▲▲▲▲▲▲▲▲▲▲▲▲▲▲▲▲▲▲▲▲▲▲▲▲▲▲▲▲▲▲▲▲▲▲

2. Check:
   - drained oil
     Drained oil shows large amounts of metal particles → Check the bearing for seizure.

**NOTE:**

A small amount of metal particles in the oil is normal.

3. Check:
   - oil leakage

▼▼▼▼▼▼▼▼▼▼▼▼▼▼▼▼▼▼▼▼▼▼▼▼▼▼▼▼▼▼▼▼▼▼

a. Clean the entire vehicle thoroughly, then dry it.
b. Apply a leak-localizing compound or dry powder spray to the shaft drive.
c. Road test the vehicle for the distance necessary to locate the leak.
   Leakage → Check the component housing, gasket, and/or seal for damage.
   Damage → Replace the component.

**NOTE:**

- An apparent oil leak on a new or nearly new vehicle may be the result of a rust preventative coating or excessive seal lubrication.
- Always clean the vehicle and recheck the suspected location of an apparent leakage.

▲▲▲▲▲▲▲▲▲▲▲▲▲▲▲▲▲▲▲▲▲▲▲▲▲▲▲▲▲▲▲▲▲▲

EBS00157

## TROUBLESHOOTING CHART

When basic condition “a” and “b” exist, check the following points:

Elevate and spin both wheels. Feel for wheel bearing damage.

YES → Replace the wheel bearing. (Refer to “STEERING SYSTEM” and “REAR KNUCKLES AND STABILIZER” in chapter 7.)

NO ↓

Check the wheel nuts and hub nuts for tightness.

NO → Torque to specification. (Refer to “FRONT AND REAR WHEELS” in chapter 7.)

YES ↓

Check the front constant velocity joints. Feel for bearing damage.

NO → Constant velocity joint bearings and differential gear bearings are probably not damaged. Repeat the test or remove the individual components.

YES ↓

Check the rear brake adjustment.

NO → Adjust per instructions. (Refer to “ADJUSTING THE REAR BRAKE” in chapter 3.)

YES ↓

Check the rear constant velocity joints. Feel for bearing damage.

NO → Constant velocity joint bearings and final drive gear bearings are probably not damaged. Repeat the test or remove the individual components.

YES ↓

Remove the drive shaft components.

# FRONT CONSTANT VELOCITY JOINTS AND DIFFERENTIAL GEAR

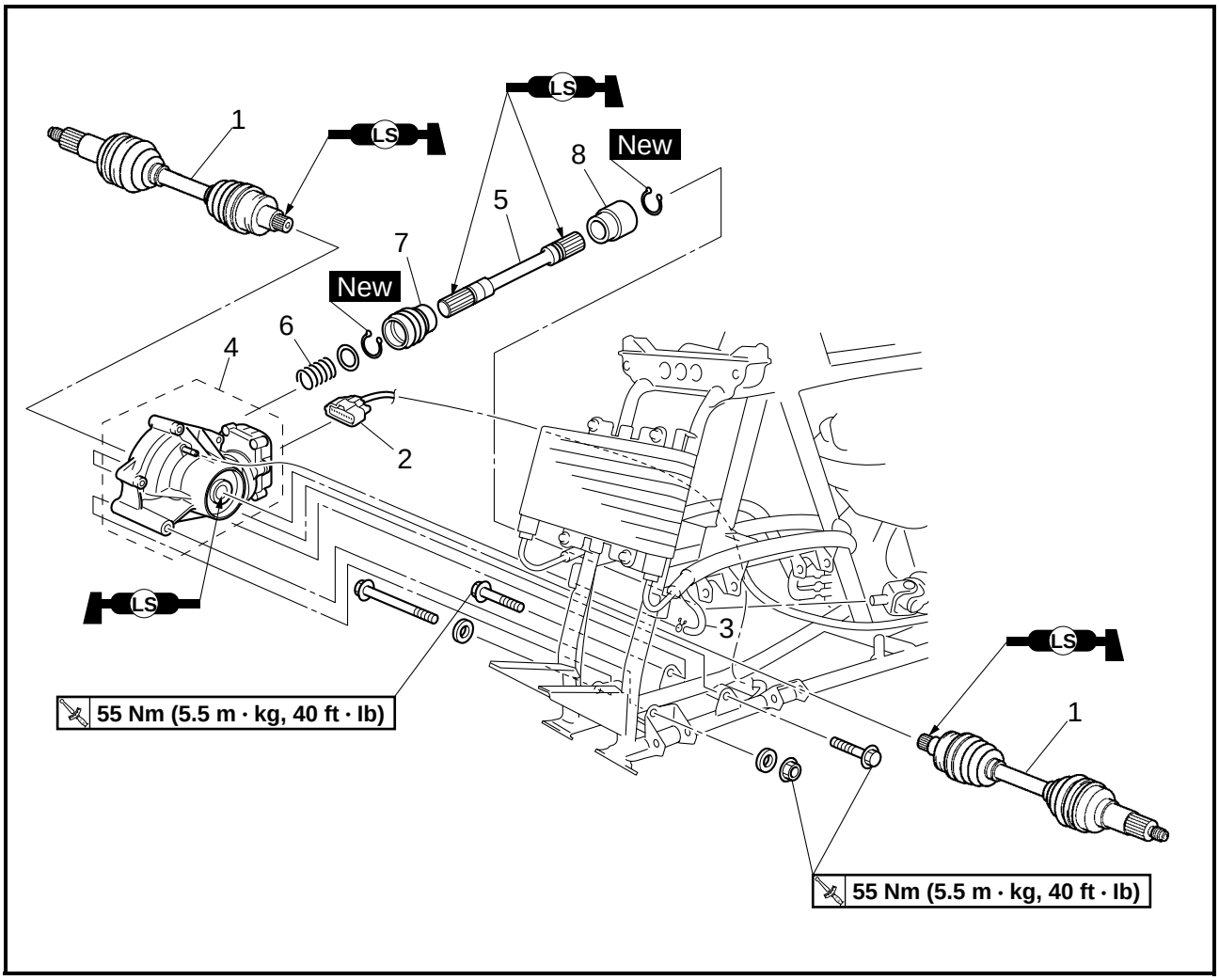


| Order | Job/Part | Q'ty | Remarks |
|---|---|---|---|
| | **Removing the front constant velocity joints and differential gear** | | Remove the parts in the order listed. |
| | Differential gear oil | | Drain.<br>Refer to "CHANGING THE DIFFERENTIAL GEAR OIL" in chapter 3. |
| | Front fender | | Refer to "SEAT, CARRIERS, FENDERS, FUEL TANK AND AIR FILTER" in chapter 3. |
| | Steering knuckle | | Refer to "STEERING SYSTEM" in chapter 7. |
| | Front arms | | Refer to "FRONT ARMS AND FRONT SHOCK ABSORBERS" in chapter 7. |
| 1 | Front constant velocity joint | 2 | |
| 2 | Differential gear motor coupler | 1 | Disconnect. |
| 3 | Differential gear case breather hose | 1 | Disconnect. |

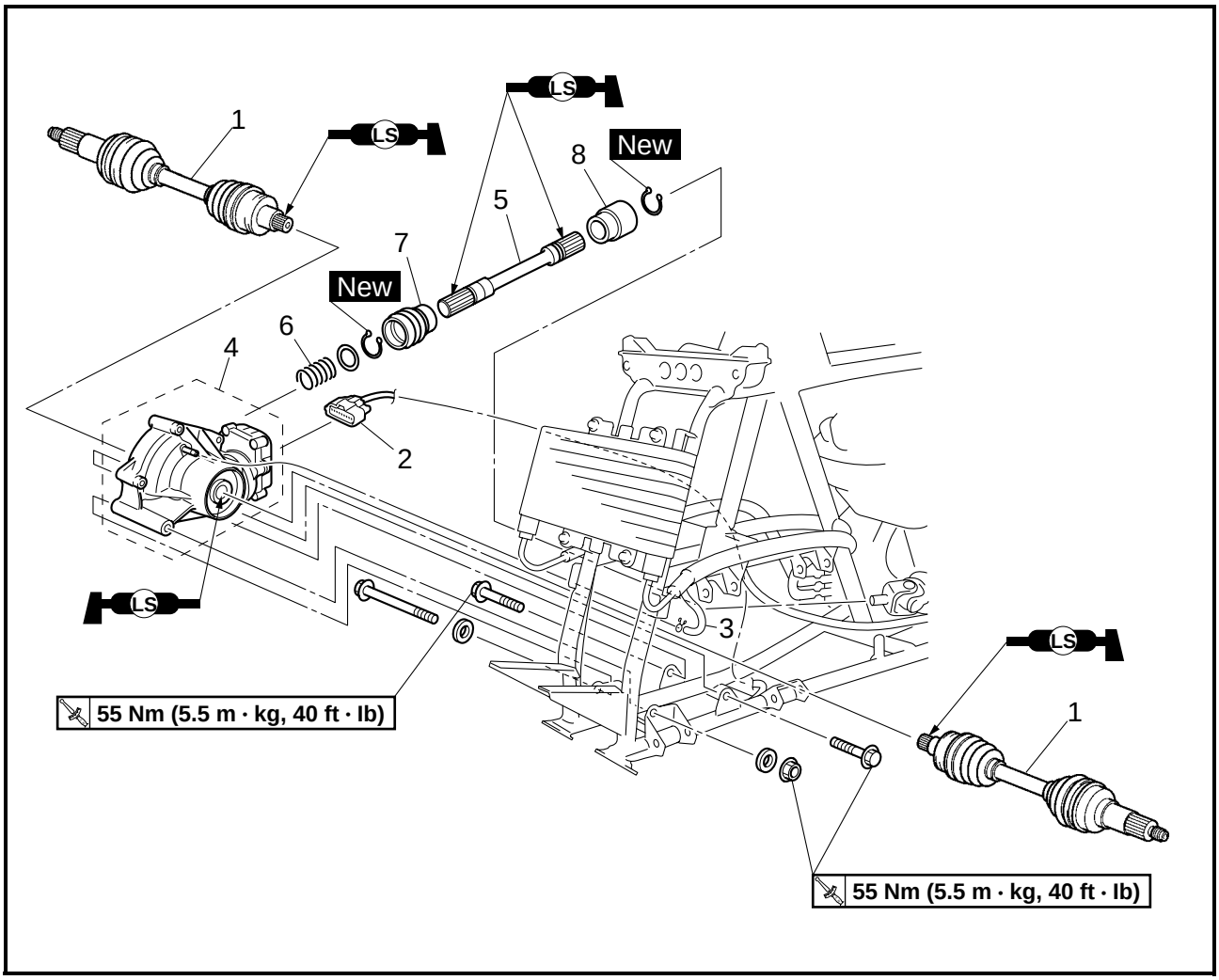


| Order | Job/Part | Q'ty | Remarks |
|---|---|---|---|
| 4 | Differential gear case assembly | 1 | |
| 5 | Front drive shaft | 1 | |
| 6 | Compression spring | 1 | |
| 7 | Dust seal | 1 | |
| 8 | Dust seal | 1 | |
| | | | For installation, reverse the removal procedure. |

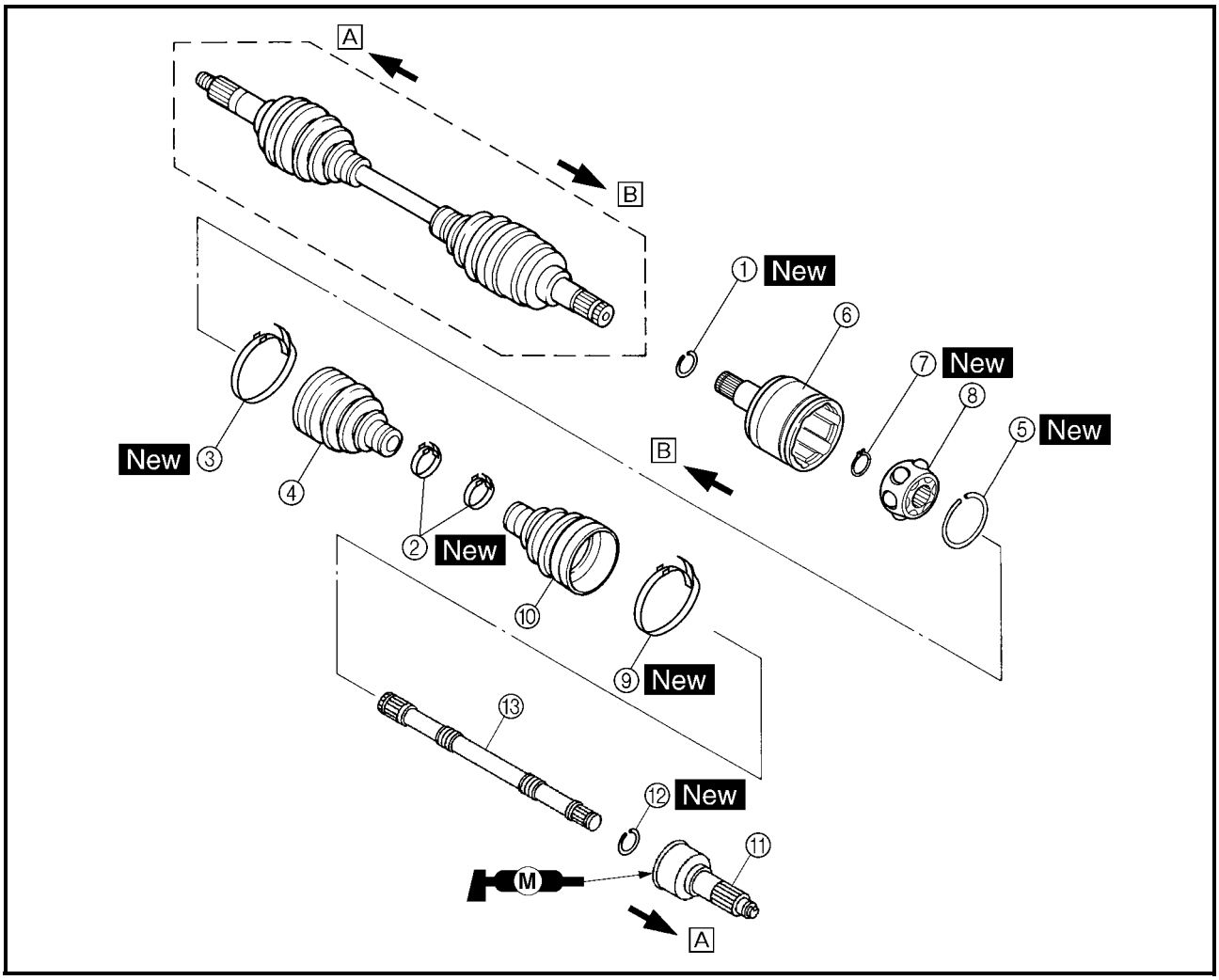


| Order | Job/Part | Q'ty | Remarks |
|---|---|---|---|
| | **Disassembling the front constant velocity joints** | | Remove the parts in the order listed. |
| ① | Clip | 1 | |
| ② | Boot band | 2 | Refer to "ASSEMBLING THE FRONT CONSTANT VELOCITY JOINTS". |
| ③ | Boot band | 1 | |
| ④ | Dust boot | 1 | |
| ⑤ | Clip | 1 | |
| ⑥ | Double off-set joint | 1 | |
| ⑦ | Circlip | 1 | |
| ⑧ | Ball bearing | 1 | |
| ⑨ | Boot band | 1 | |
| ⑩ | Dust boot | 1 | |
| ⑪ | Off-set joint | 1 | |
| ⑫ | Clip | 1 | |

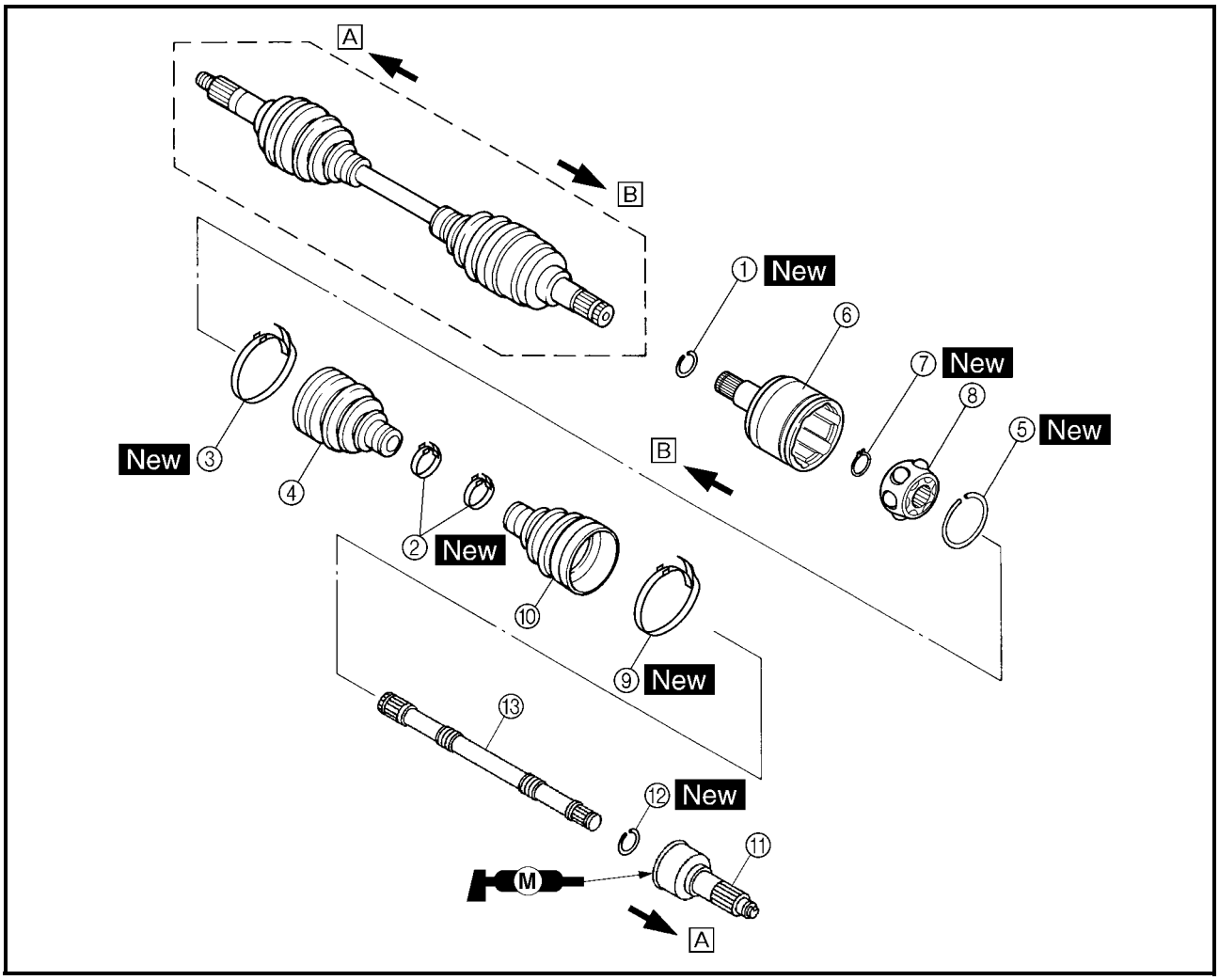


| Order | Job/Part | Q'ty | Remarks |
|---|---|---|---|
| ⑬ | Joint shaft | 1 | Refer to "ASSEMBLING THE FRONT CONSTANT VELOCITY JOINTS".<br>For assembly, reverse the disassembly procedure. |

A Wheel side
B Gear case side

EBS00160

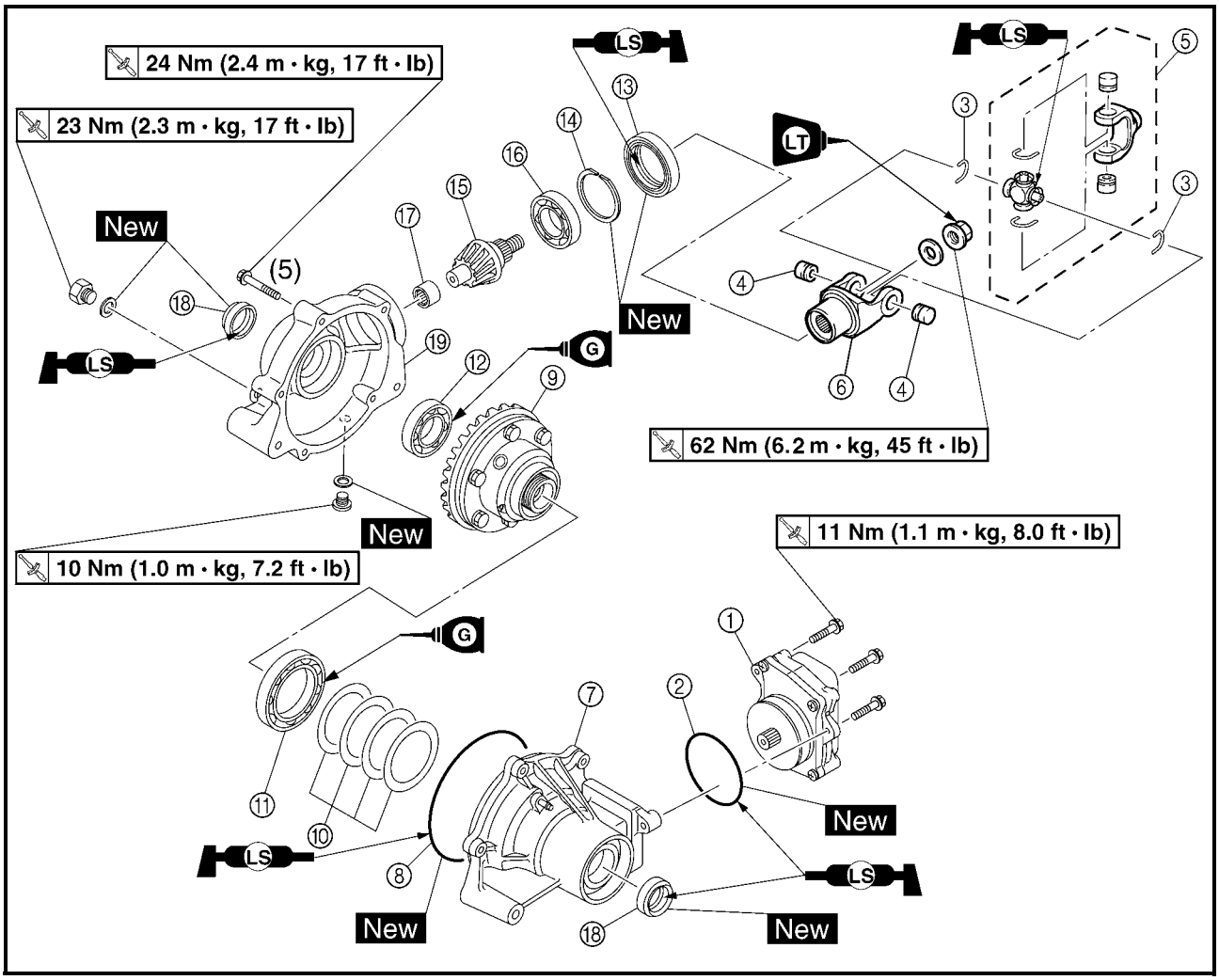


| Order | Job/Part | Q'ty | Remarks |
|---|---|---|---|
| | **Disassembling the differential gear case** | | Remove the parts in the order listed. |
| ① | Differential gear motor | 1 | Refer to "ASSEMBLING THE DIFFERENTIAL GEAR". |
| ② | O-ring | 1 | |
| ③ | Circlip | 2 | Refer to "REMOVING THE DIFFERENTIAL GEARS" and "ASSEMBLING THE DIFFERENTIAL GEAR". |
| ④ | Bearing | 2 | |
| ⑤ | Universal joint | 1 | |
| ⑥ | Universal joint yoke | 1 | |
| ⑦ | Differential gear case cover | 1 | |
| ⑧ | O-ring | 1 | |
| ⑨ | Differential gear assembly | 1 | |
| ⑩ | Differential drive pinion gear shim | * | |
| ⑪ | Bearing | 1 | |

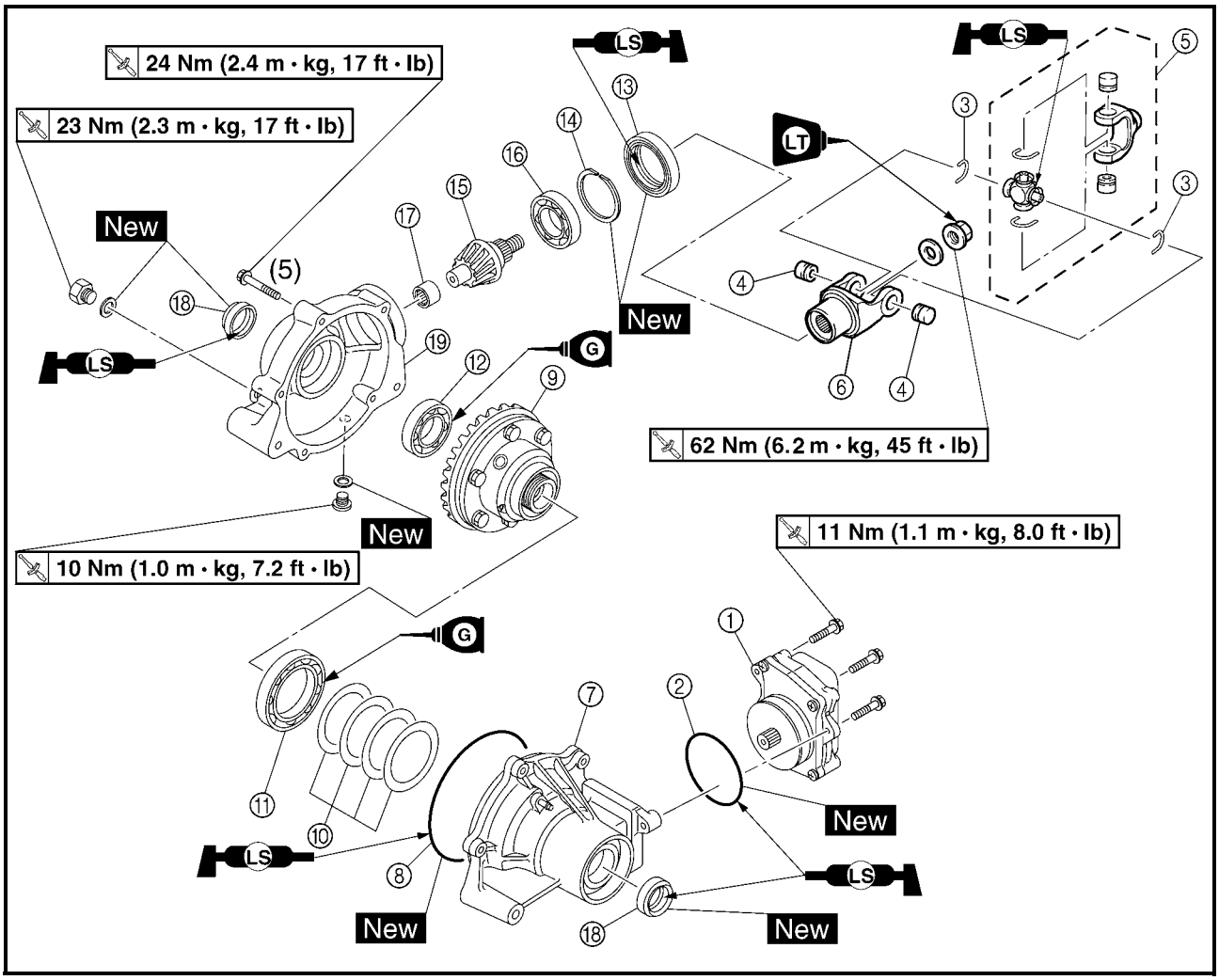


| Order | Job/Part | Q'ty | Remarks |
|---|---|---|---|
| ⑫ | Bearing | 1 | |
| ⑬ | Oil seal | 1 | |
| ⑭ | Clip | 1 | |
| ⑮ | Differential drive pinion gear | 1 | |
| ⑯ | Bearing | 1 | |
| ⑰ | Bearing | 1 | |
| ⑱ | Oil seal | 2 | |
| ⑲ | Differential gear case | 1 | |
| | | | For assembly, reverse the disassembly procedure. |

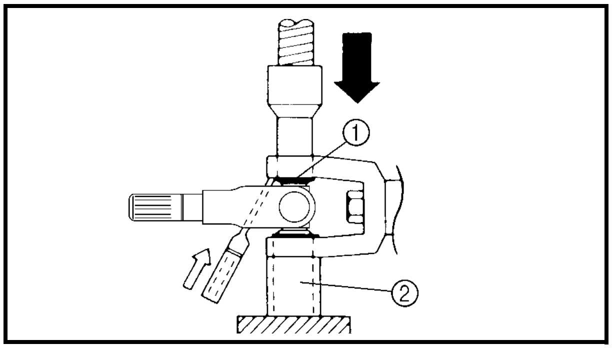


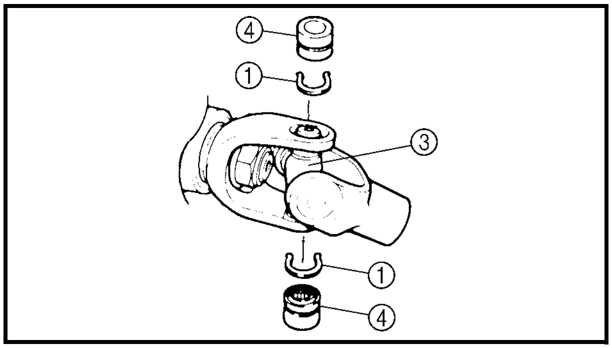


### DISASSEMBLING THE UNIVERSAL JOINT

1. Remove:
   • universal joint

▼▼▼▼▼▼▼▼▼▼▼▼▼▼▼▼▼▼▼▼▼▼▼▼▼▼▼▼▼▼▼▼▼▼

a. Remove the circlips ①.
b. Place the universal joint in a press.
c. With a suitable diameter pipe ② beneath the yoke ③, press the bearing ④ into the pipe as shown.

**NOTE:**
It may be necessary to lightly tap the yoke with a punch.

d. Repeat the steps for the opposite bearing.
e. Remove the yoke.

**NOTE:**
It may be necessary to lightly tap the yoke with a punch.

▲▲▲▲▲▲▲▲▲▲▲▲▲▲▲▲▲▲▲▲▲▲▲▲▲▲▲▲▲▲▲▲▲▲

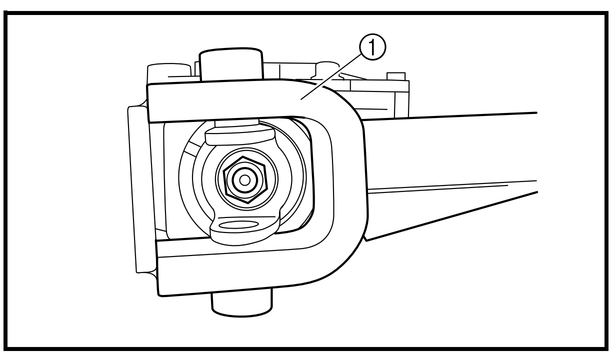


2. Remove:
   • universal joint yoke

| | |
|---|---|
| | **Universal joint holder**<br>**90890-04062, YM-04062** |

**NOTE:**
Use the universal joint holder ① to hold the universal joint yoke.

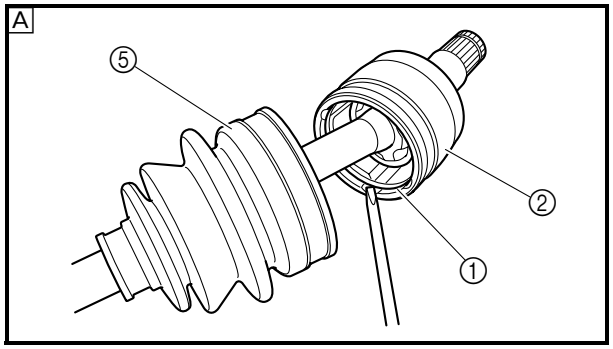


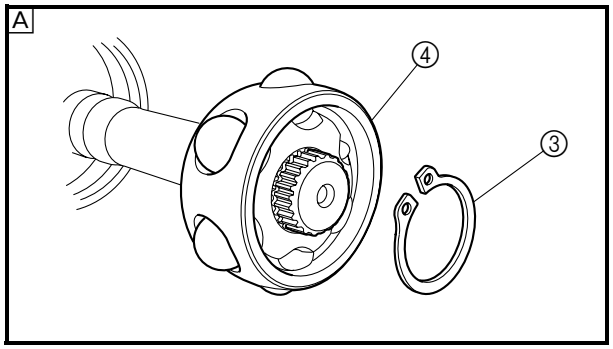


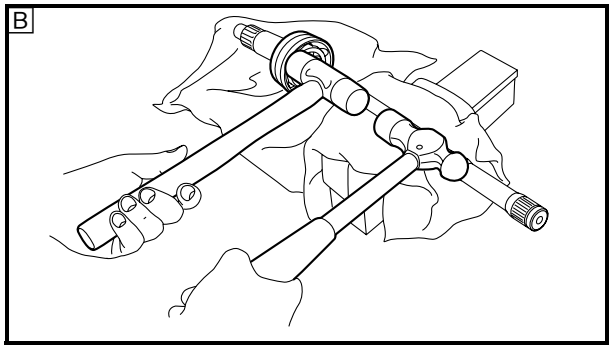


### REMOVING THE FRONT CONSTANT VELOCITY JOINTS

1. Remove:
   - boot bands
   - clip ① New
   - double off-set joint ②
   - circlip ③ New
   - ball bearing ④
   - dust boot ⑤

**NOTE:**
Before removing the clip ①, slide the dust boot away from the double off-set joint.

A Gear case side

2. Remove:
   - boot bands
   - off-set joint
   - clip New
   - dust boots

**NOTE:**
Secure the joint shaft in a vise, and then remove the off-set joint using hammers.

B Wheel side

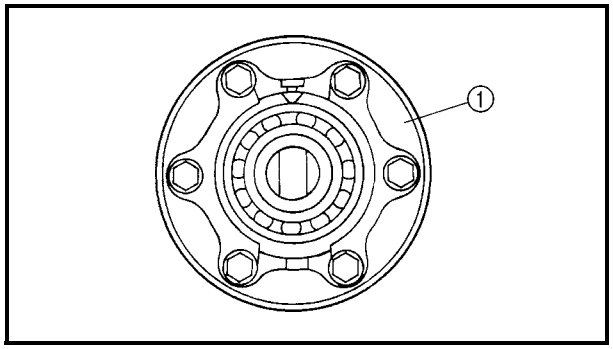


EBS00163

### REMOVING THE DIFFERENTIAL GEARS

1. Remove:
   - differential gear assembly ①

**NOTE:**

The ring gear and the differential gear should be fastened together. Do not disassemble the differential gear.

**CAUTION:**

**The differential gear are assembled into a proper unit at the factory by means of specialized equipment. Do not attempt to disassemble this unit. Disassembly will result in the malfunction of the unit.**

EBS00165

### CHECKING THE FRONT CONSTANT VELOCITY JOINTS

1. Check:
   - double off-set joint spline
   - ball joint spline
   - shaft spline
     Wear/damage → Replace.
2. Check:
   - dust boots
     Cracks/damage → Replace.

**CAUTION:**

**Always use a new boot band.**

3. Check:
   - balls and ball races
   - inner surface of double off-set joint
     Pitting/wear/damage → Replace.

EBS00166

### CHECKING THE DIFFERENTIAL GEARS

1. Check:
   - gear teeth
     Pitting/galling/wear → Replace.
   - bearing
     Pitting/damage → Replace.
   - oil seal
   - O-ring
     Damage → Replace.
2. Check:
   - front drive shaft splines
   - differential drive pinion gear splines
     Wear/damage → Replace.
   - spring
     Fatigue → Replace.
     Move the spring up and down.
3. Check:
   - front drive shaft
     Bends → Replace.

**⚠ WARNING**

**Do not attempt to straighten a bent shaft; this may dangerously weaken the shaft.**

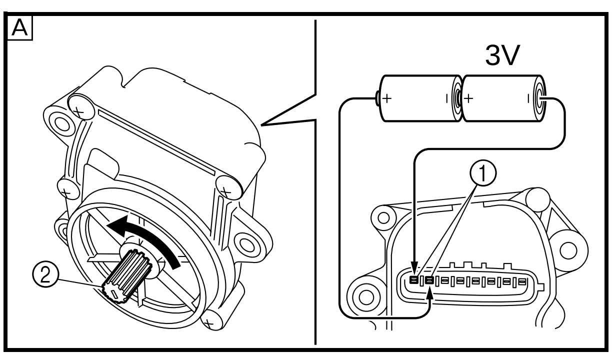


### CHECKING THE DIFFERENTIAL GEAR MOTOR

1. Check:
   - differential gear motor

▼▼▼▼▼▼▼▼▼▼▼▼▼▼▼▼▼▼▼▼▼▼▼▼▼▼▼▼▼▼▼▼▼▼▼

a. Connect two C size batteries to the gear motor terminals ① (as shown in illustration).

**CAUTION:**

- **Be sure to check the motor operation after removing it from the differential gear case assembly.**
- **Do not use a 12 V battery to operate the pinion gear.**

A Check that the pinion gear ② turns counter-clockwise.

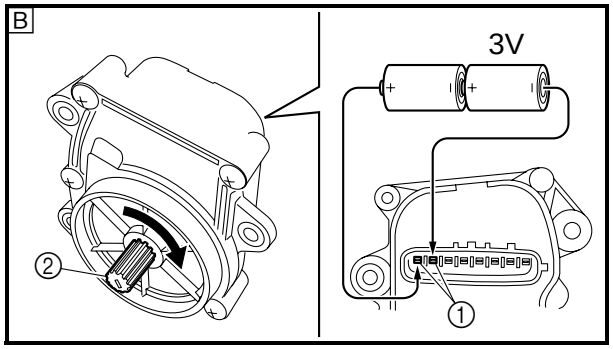


B Check that the pinion gear ② turns clockwise.

**NOTE:**

Be sure not to disassemble the gear motor and remove the pinion gear.

▲▲▲▲▲▲▲▲▲▲▲▲▲▲▲▲▲▲▲▲▲▲▲▲▲▲▲▲▲▲▲▲

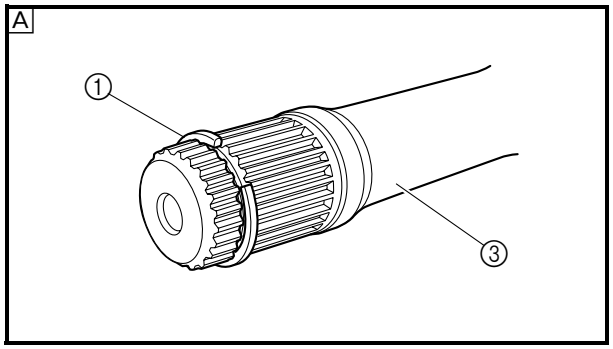


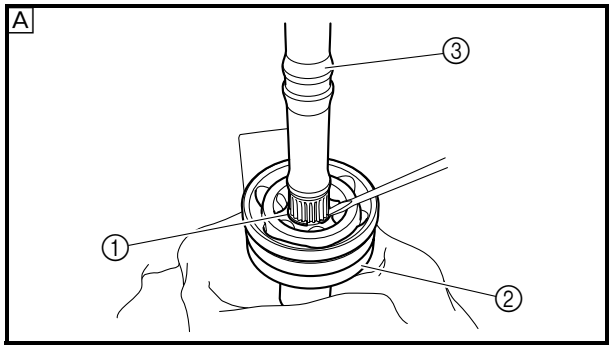


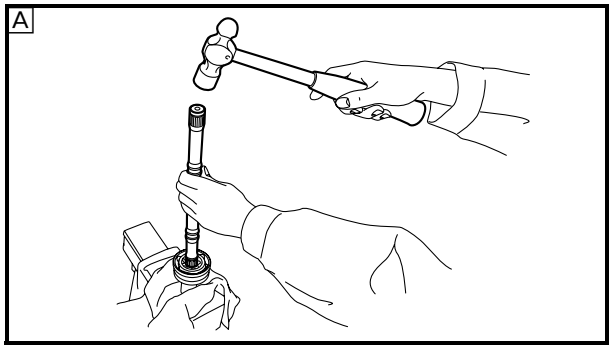


EBS00167

## ASSEMBLING THE FRONT CONSTANT VELOCITY JOINTS

1. Install:
   - dust boot
   - clip ① New
   - off-set joint ②
   - joint shaft ③

▼▼▼▼▼▼▼▼▼▼▼▼▼▼▼▼▼▼▼▼▼▼▼▼▼▼▼▼▼▼▼▼

a. Install the clip ①.

b. Install the off-set joint ②.

**NOTE:**

- Install the clip ① into the groove in the joint shaft as shown.
- Secure the off-set joint in a vise, and then fit the joint shaft into the off-set joint using a hammer.

▲▲▲▲▲▲▲▲▲▲▲▲▲▲▲▲▲▲▲▲▲▲▲▲▲▲▲▲▲▲▲▲

A Wheel side

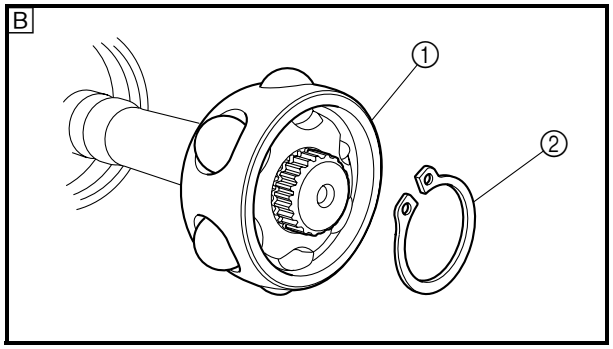


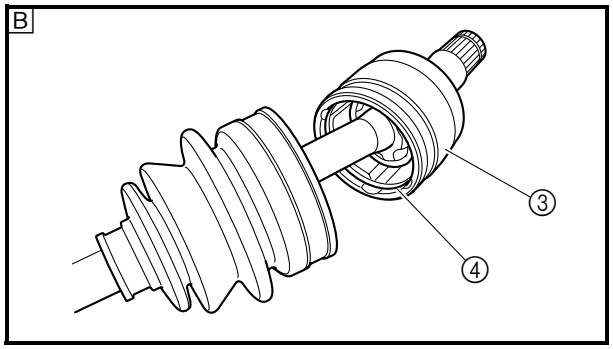


2. Install:
   - dust boot
   - ball bearing ①
   - circlip ② New
   - double off-set joint ③
   - clip ④ New

**NOTE:**
- Securely install the circlip into the groove in the joint shaft.
- Securely install the clip into the groove in the double off-set joint.

B Gear case side

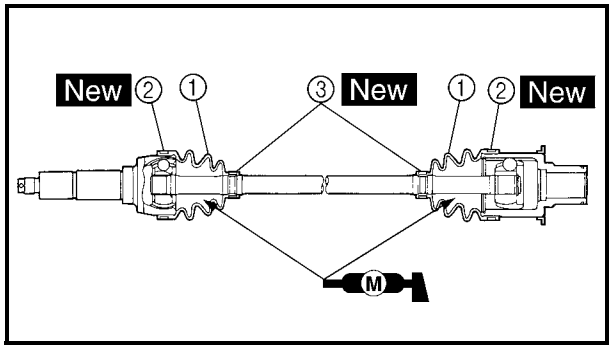


3. Apply:
   - molybdenum disulfide grease (into the ball joint assembly)

**NOTE:**
Molybdenum disulfide grease is included in the repair kit.

4. Install:
   - dust boots ①
   - boot bands ②, ③ New

▼▼▼▼▼▼▼▼▼▼▼▼▼▼▼▼▼▼▼▼▼▼▼▼▼▼▼▼▼▼▼▼▼▼▼▼

a. Apply molybdenum disulfide grease into the dust boots.

| | |
|---|---|
| | **Molybdenum disulfide grease**<br>**45 g (1.6 oz) per dust boot (front wheel side)**<br>**45 g (1.6 oz) per dust boot (differential gear case side)** |

b. Install the dust boots.
c. Install the dust boot bands.

**NOTE:**
- The new boot bands may differ from the original ones.
- The dust boots should be fastened with the boot bands ③ at the grooves in the joint shaft.

▲▲▲▲▲▲▲▲▲▲▲▲▲▲▲▲▲▲▲▲▲▲▲▲▲▲▲▲▲▲▲▲▲▲

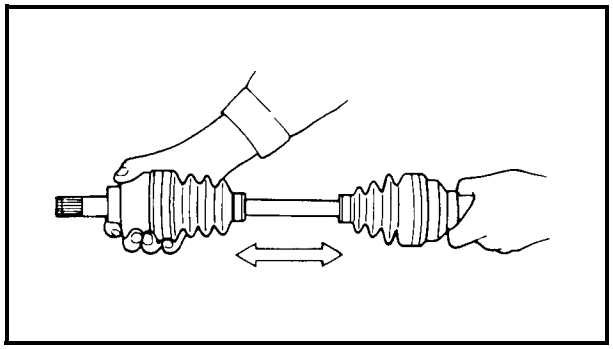

5. Check:
   - thrust movement free play
     Excessive play → Replace the joint assembly.

EBS01009

## ASSEMBLING THE DIFFERENTIAL GEAR

1. Measure:
   - gear lash
     Refer to “MEASURING THE DIFFERENTIAL GEAR LASH”.

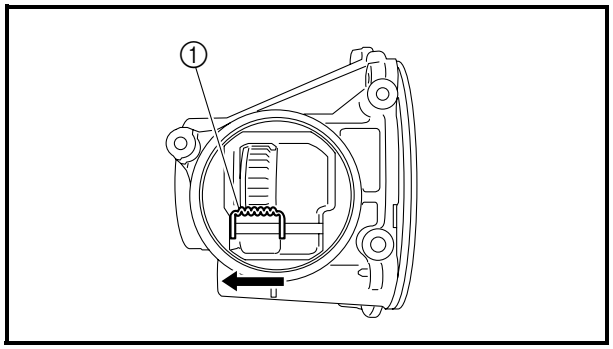


2. Install:
   - differential gear motor

▼▼▼▼▼▼▼▼▼▼▼▼▼▼▼▼▼▼▼▼▼▼▼▼▼▼▼▼▼▼▼▼▼▼

a. Slide the shift fork sliding gear ①, which is installed to the differential gear, to the left to put it into the 2WD mode.

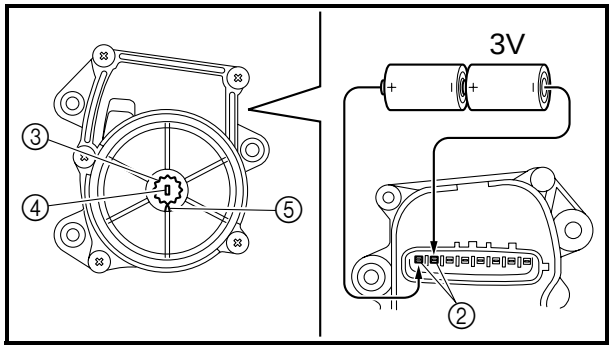


b. Connect two C size batteries to the gear motor terminals ② to operate the pinion gear ③, and operate it until the mark ④ on the gear is aligned with the mark ⑤ on the gear motor case.

**CAUTION:**

**Do not use a 12 V battery to operate the pinion gear.**

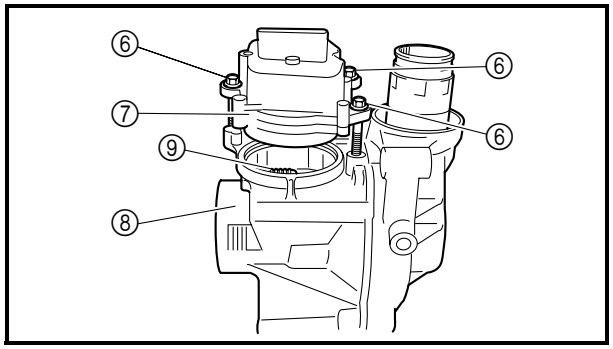


c. Insert 6 mm bolts ⑥ into the gear motor ⑦ and use them as a guide to set the motor on the differential gear assembly ⑧ so that the shift fork sliding gear ⑨ does not move.

**CAUTION:**

**If the position of the shift fork sliding gear is moved, the position of the differential gear and the indicator light display may differ, and the 2WD or differential lock mode may not be activated.**

d. Remove the 6 mm bolts, and then install the motor with the gear motor bolts.

| | |
|---|---|
| | **Differential gear motor bolt**<br>**11 Nm (1.1 m · kg, 8.0 ft · lb)** |

▲▲▲▲▲▲▲▲▲▲▲▲▲▲▲▲▲▲▲▲▲▲▲▲▲▲▲▲▲▲▲▲▲▲

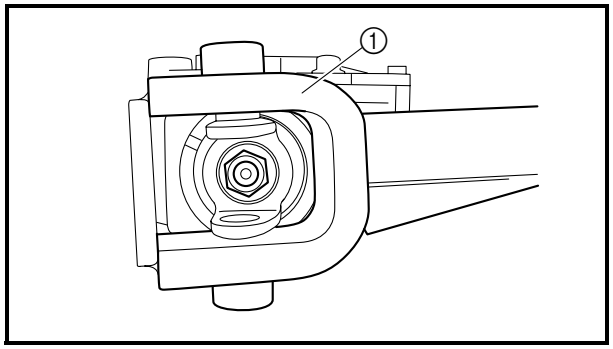


3. Install:
   - universal joint yoke
   - washer
   - nut

| | |
|---|---|
| | 62 Nm (6.2 m · kg, 45 ft · lb) |

| | |
|---|---|
| | **Universal joint holder 90890-04062, YM-04062** |

**NOTE:**
- Apply locking agent (LOCTITE®) to the nut threads.
- Use the universal joint holder ① to hold the universal joint yoke.

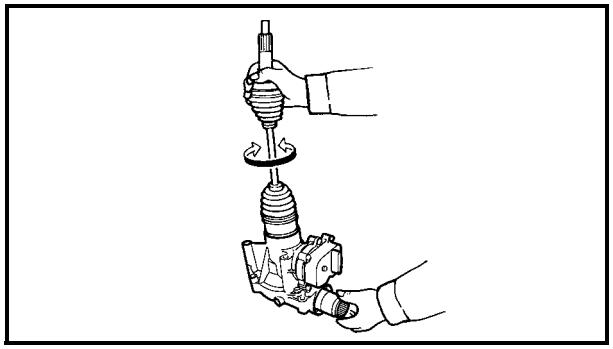

4. Check:
   - differential gear operation
     Unsmooth operation → Replace the differential gear assembly.
     Insert the double off-set joint into the differential gear, and turn the gear back and forth.

EBS00174

## MEASURING THE DIFFERENTIAL GEAR LASH

1. Secure the gear case in a vise or another supporting device.
2. Remove:
   - differential gear case drain bolt
   - gasket

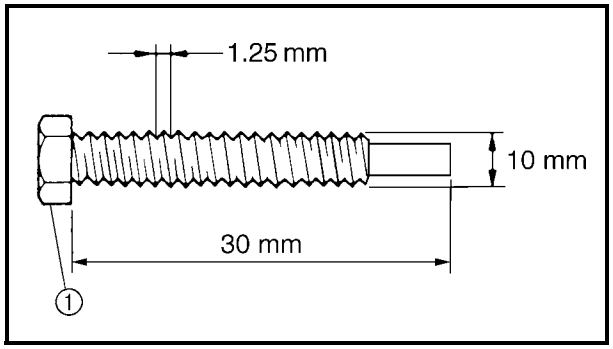


3. Install:
   - a bolt of the specified size ①
     (into the drain bolt hole)

**CAUTION:**

**Finger tighten the bolt until it holds the ring gear. Otherwise, the ring gear will be damaged.**

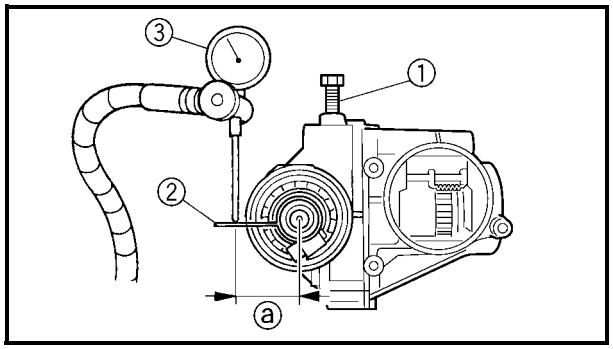


4. Attach:
   - gear lash measurement tool ②
   - dial gauge ③

**Gear lash measurement tool**
**90890-01475**
**Middle drive gear lash tool**
**YM-01475**

ⓐ Measuring point is 22.5 mm (0.86 in)

5. Measure:
   - gear lash
     Gently rotate the coupling gear from engagement to engagement.

**Differential gear lash**
**0.05 ~ 0.25 mm**
**(0.0020 ~ 0.0098 in)**

**NOTE:**
Measure the gear lash at four positions. Rotate the shaft 90° each time.

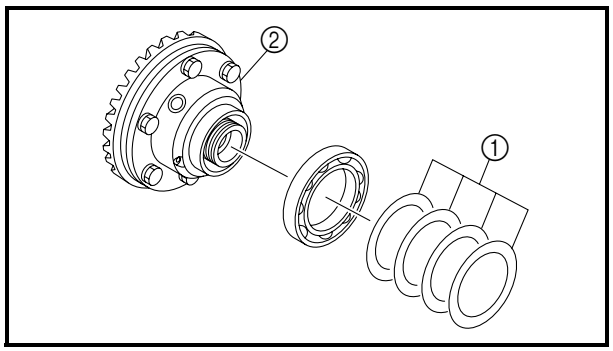


EBS00176

## ADJUSTING THE DIFFERENTIAL GEAR LASH

1. Remove:
   - differential drive pinion gear shim(s) ①
   - differential gear assembly ②

2. Adjust:
   - gear lash

▼▼▼▼▼▼▼▼▼▼▼▼▼▼▼▼▼▼▼▼▼▼▼▼▼▼▼▼▼▼▼▼▼▼

a. Select the suitable shims using the following chart.

| | |
|---|---|
| **Too little gear lash** | **Reduce shim thickness.** |
| **Too large gear lash** | **Increase shim thickness.** |

| **Ring gear shim** | |
|---|---|
| **Thickness (mm)** | **0.1**<br>**0.2**<br>**0.3**<br>**0.4** |

▲▲▲▲▲▲▲▲▲▲▲▲▲▲▲▲▲▲▲▲▲▲▲▲▲▲▲▲▲▲▲▲▲▲

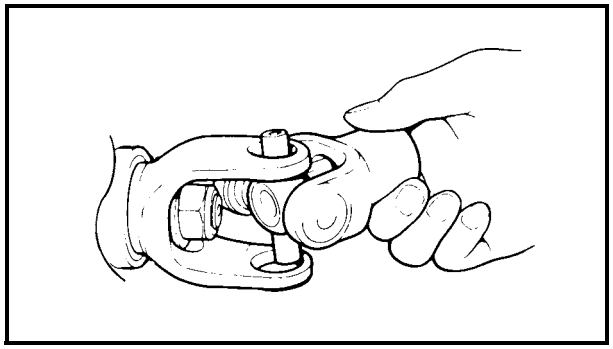

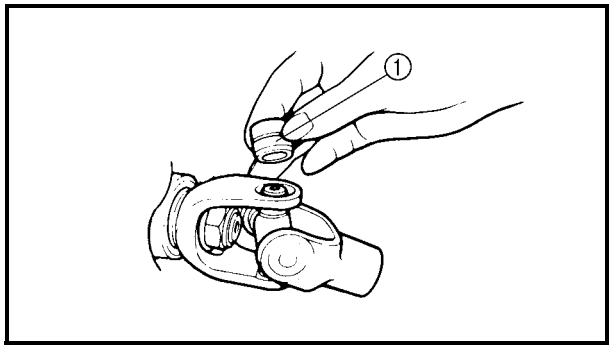


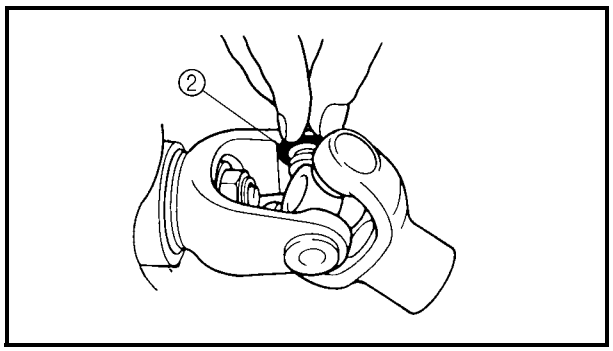


**ASSEMBLING THE UNIVERSAL JOINT**

1. Install:
   - universal joint

▼▼▼▼▼▼▼▼▼▼▼▼▼▼▼▼▼▼▼▼▼▼▼▼▼▼▼▼▼▼▼▼▼▼

a. Install the opposite yoke into the universal joint.
b. Apply wheel bearing grease to the bearings.
c. Install the bearing ① onto the yoke.

**CAUTION:**

**Check each bearing. The needles can easily fall out of their races. Slide the yoke back and forth on the bearings; the yoke will not go all the way onto a bearing if a needle is out of plate.**

d. Press each bearing into the universal joint using a suitable socket.

**NOTE:**

The bearing must be inserted far enough into the universal joint so that the circlip can be installed.

e. Install the circlips ② into the groove of each bearing.

▲▲▲▲▲▲▲▲▲▲▲▲▲▲▲▲▲▲▲▲▲▲▲▲▲▲▲▲▲▲▲▲▲▲

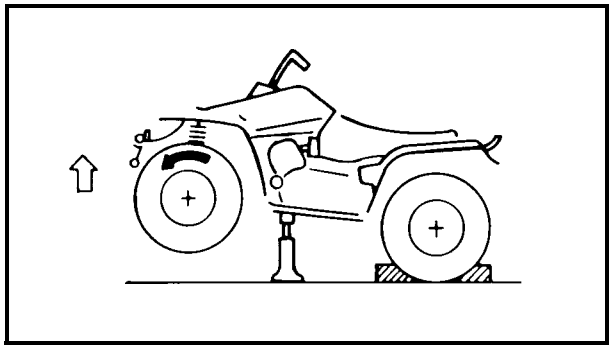

EBS00177

## CHECKING THE DIFFERENTIAL GEAR OPERATION

1. Block the rear wheels, and elevate the front wheels by placing a suitable stand under the frame.
2. Remove the wheel cap from the axle nut (right or left).
3. Measure the starting torque of the front wheel (i.e., differential gear preload) with the torque wrench.

**NOTE:**

- Repeat this step several times to obtain an average figure.
- During this test, the other front wheel will turn in the opposite direction.

**Front wheel starting torque (differential gear preload)**
**New unit**
**17 ~ 25 Nm**
**(1.7 ~ 2.5 m · kg, 12 ~ 18 ft · lb)**
**Minimum**
**10 Nm (1.0 m · kg, 7.2 ft · lb)**

4. Out of specification → Replace the differential gear assembly.
5. Within specification → Install the wheel cap.

# REAR CONSTANT VELOCITY JOINTS AND FINAL DRIVE GEAR

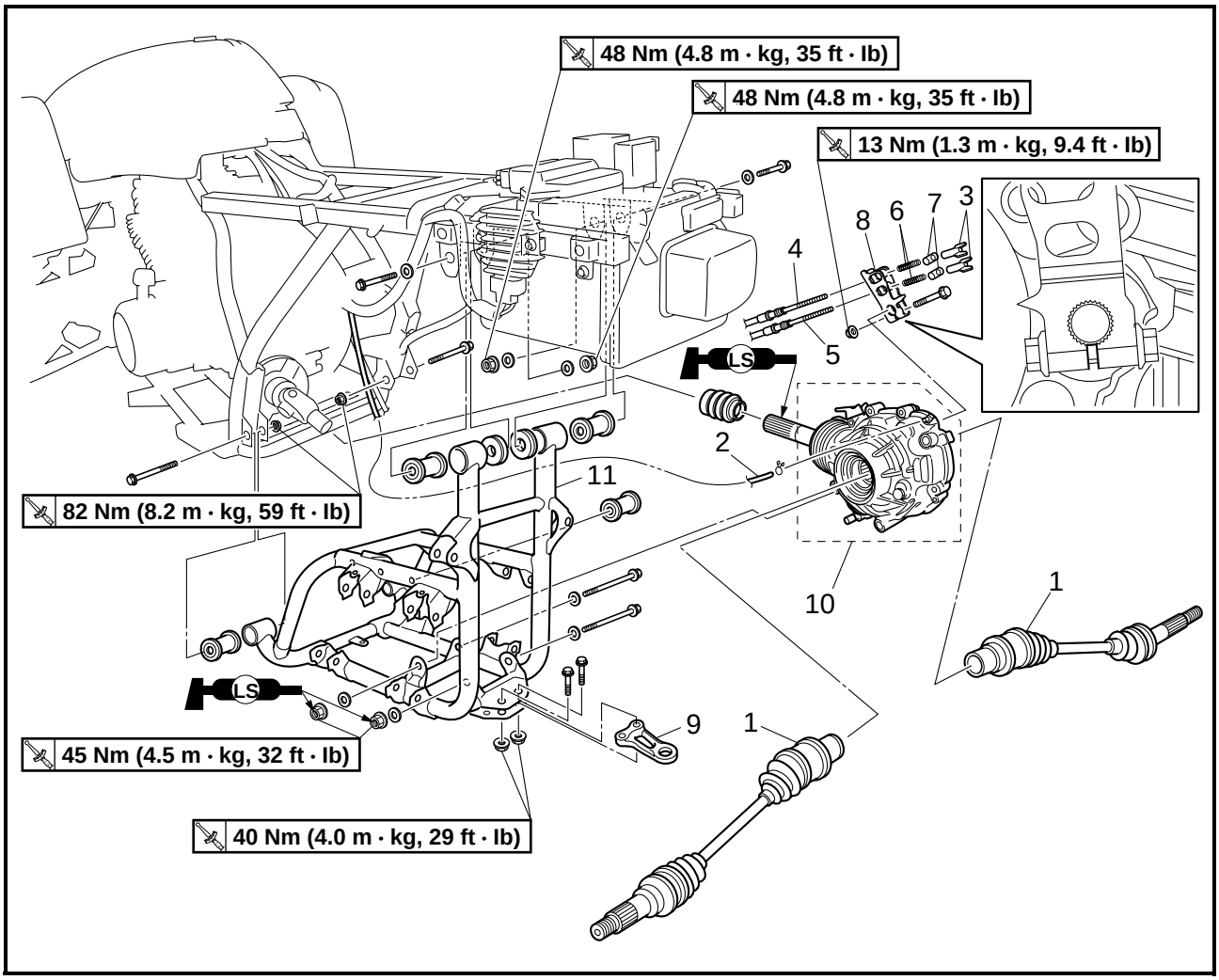


| Order | Job/Part | Q'ty | Remarks |
|---|---|---|---|
| | **Removing the rear constant velocity joints and final drive gear** | | Remove the parts in the order listed. |
| | Final gear case skid plate | | Refer to "SEAT, CARRIERS, FENDERS, FUEL TANK AND AIR FILTER" in chapter 3. |
| | Rear fender | | Refer to "SEAT, CARRIERS, FENDERS, FUEL TANK AND AIR FILTER" in chapter 3. |
| | Footrest boards | | Refer to "FOOTREST BOARDS" in chapter 3. |
| | Final gear oil | | Drain. |
| | Rear arms and rear shock absorber | | Refer to "REAR ARMS AND REAR SHOCK ABSORBERS" in chapter 7. |
| 1 | Rear constant velocity joint | 2 | |
| 2 | Final gear case breather hose | 1 | Disconnect. |

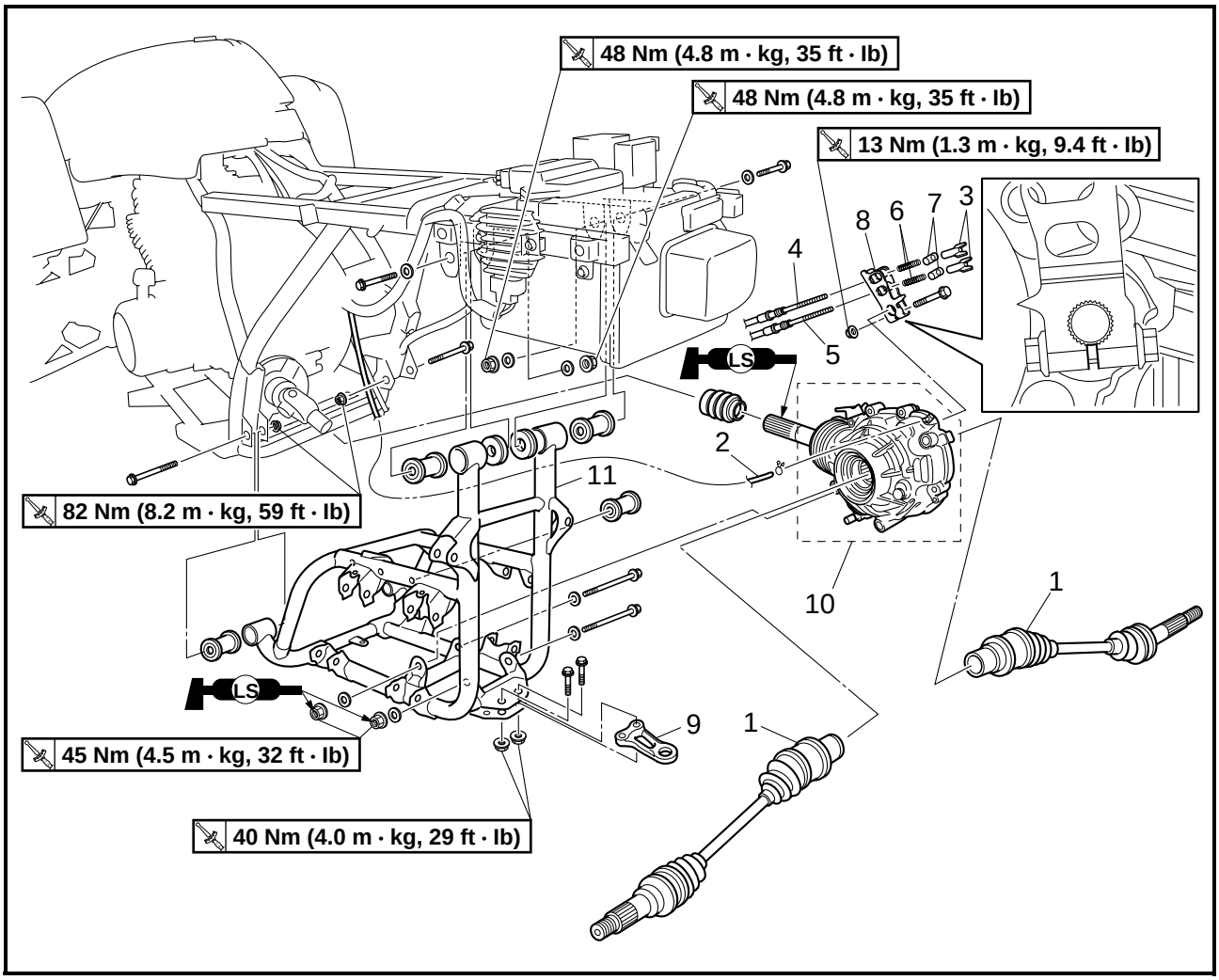


| Order | Job/Part | Q'ty | Remarks |
|---|---|---|---|
| 3 | Rear brake cable adjusting nut | 2 | |
| 4 | Rear brake lever cable | 1 | Disconnect. |
| 5 | Brake pedal cable | 1 | Disconnect. |
| 6 | Spring | 2 | |
| 7 | Pin | 2 | |
| 8 | Rear brake camshaft lever | 1 | |
| 9 | Trailer hitch | 1 | |
| 10 | Final gear assembly | 1 | |
| 11 | Sub-frame | 1 | |
| | | | For installation, reverse the removal procedure. |

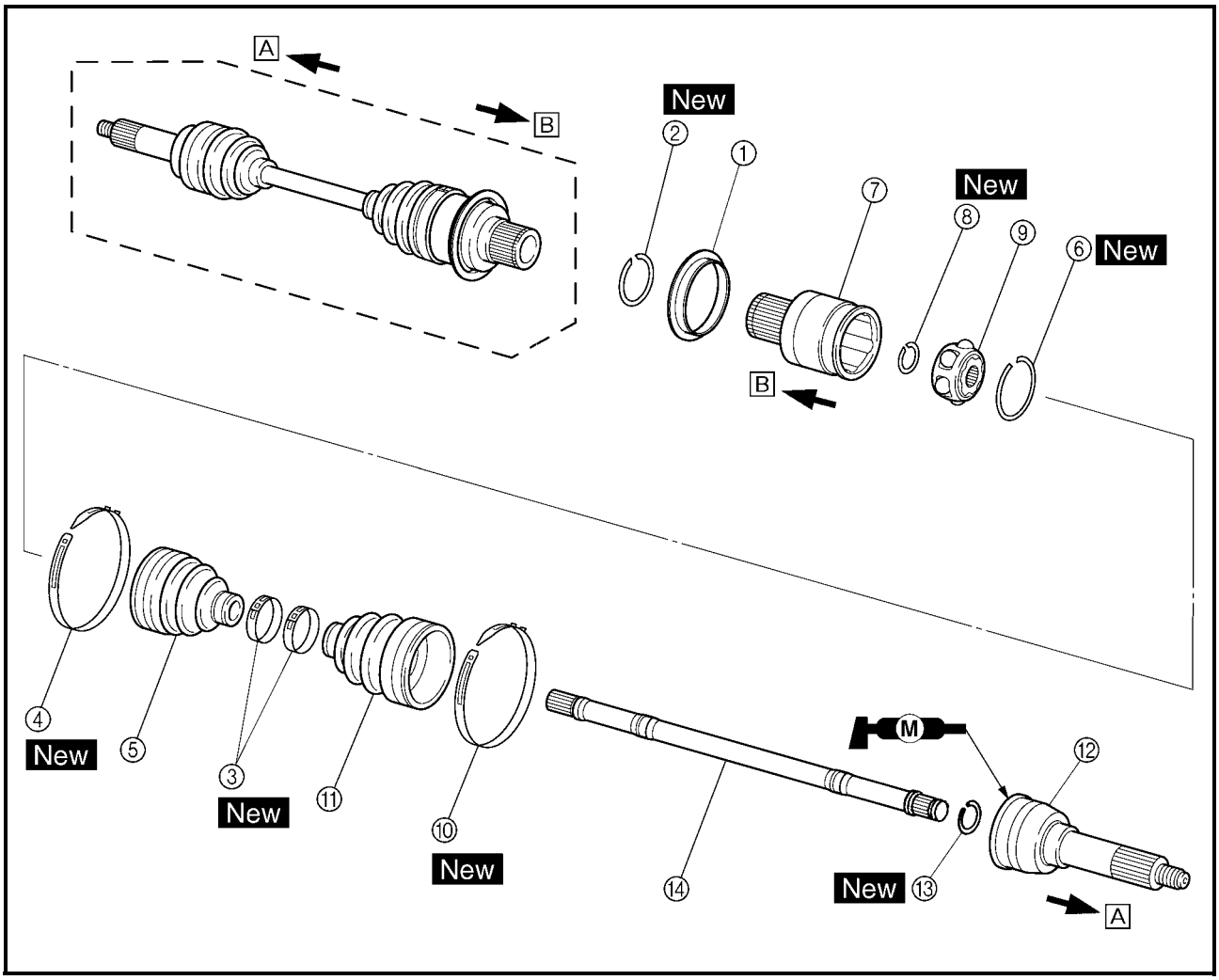


| Order | Job/Part | Q'ty | Remarks |
|---|---|---|---|
| | **Disassembling the rear constant velocity joints** | | Remove the parts in the order listed. |
| ① | Dust cover | 1 | |
| ② | Clip | 1 | |
| ③ | Boot band | 2 | Refer to "ASSEMBLING THE REAR CONSTANT VELOCITY JOINTS". |
| ④ | Boot band | 1 | |
| ⑤ | Dust boot | 1 | |
| ⑥ | Clip | 1 | |
| ⑦ | Double off-set joint | 1 | |
| ⑧ | Circlip | 1 | |
| ⑨ | Ball bearing | 1 | |
| ⑩ | Boot band | 1 | |
| ⑪ | Dust boot | 1 | |
| ⑫ | Off-set joint | 1 | |
| ⑬ | Clip | 1 | |

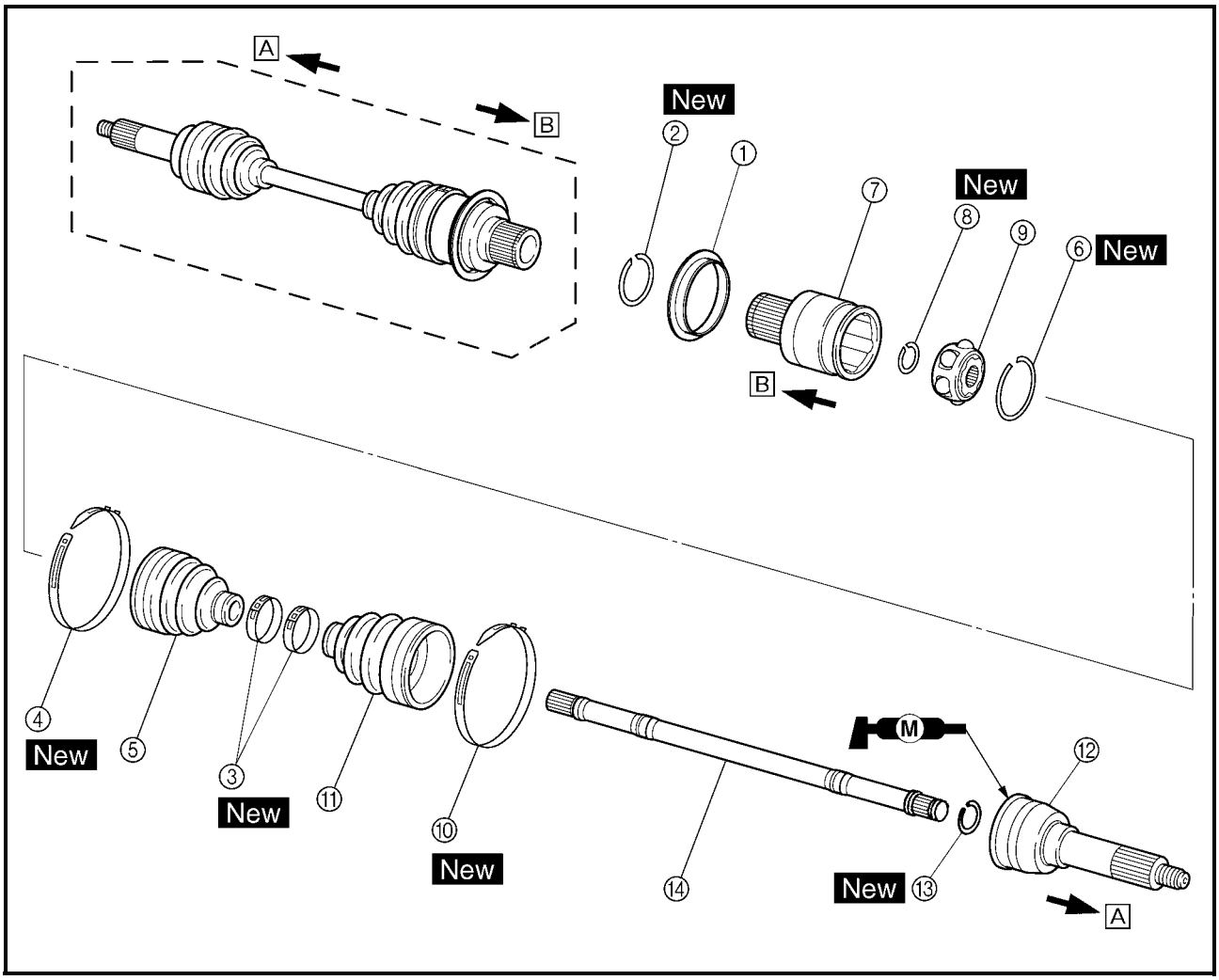


| Order | Job/Part | Q'ty | Remarks |
|---|---|---|---|
| ⑭ | Joint shaft | 1 | Refer to "ASSEMBLING THE REAR CONSTANT VELOCITY JOINTS".<br>For assembly, reverse the disassembly procedure. |

A Wheel side
B Gear case side

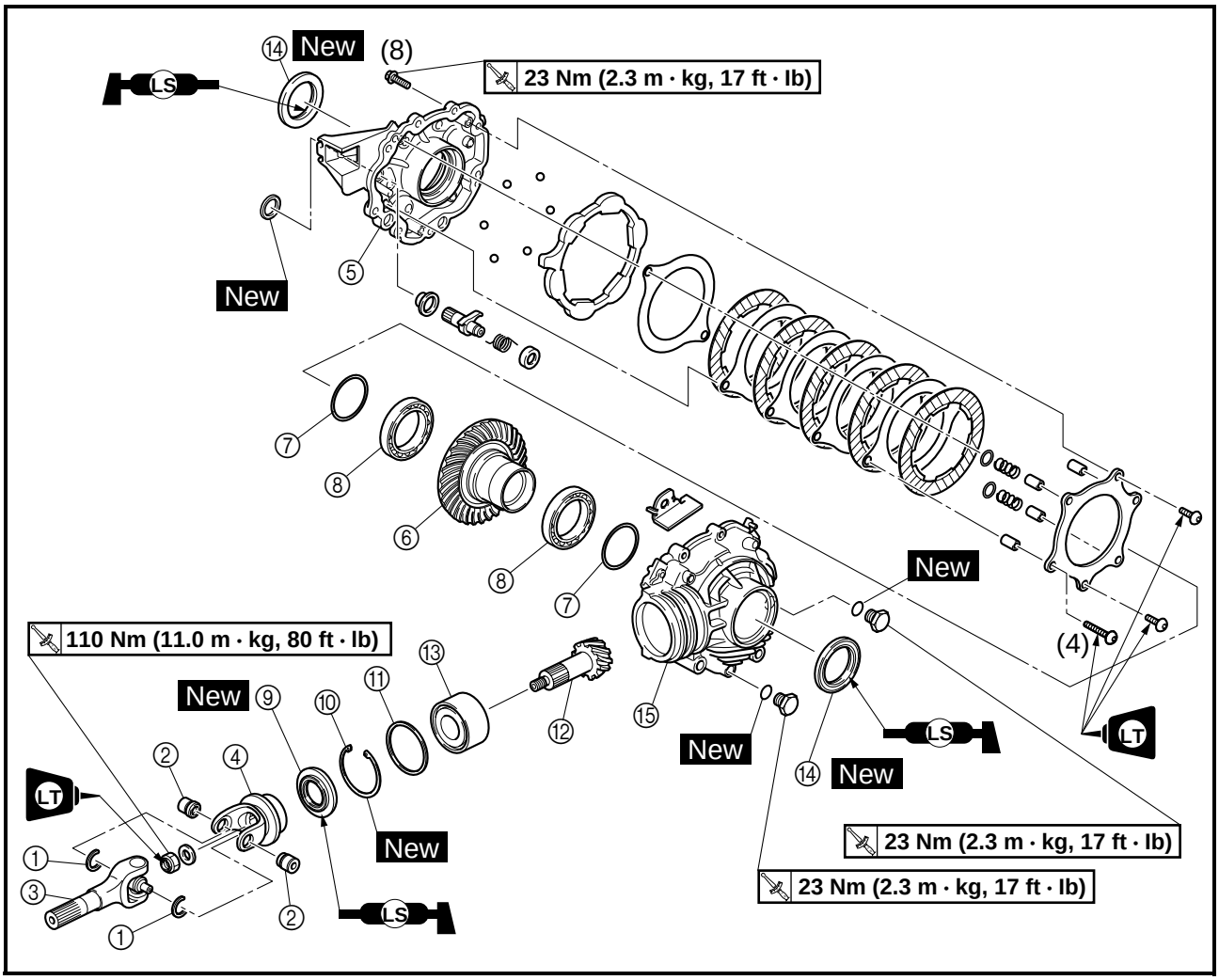


| Order | Job/Part | Q'ty | Remarks |
|---|---|---|---|
| | **Disassembling the final drive gear** | | Remove the parts in the order listed. |
| ① | Circlip | 2 | Refer to "DISASSEMBLING THE FINAL DRIVE GEAR" and "ASSEMBLING THE FINAL DRIVE GEAR". |
| ② | Bearing | 2 | |
| ③ | Drive shaft/universal joint yoke | 1 | |
| ④ | Universal joint yoke | 1 | |
| ⑤ | Final gear case (right side) | 1 | **NOTE:** Working in a crisscross pattern, loosen each bolt 1/4 of a turn. After all the bolts are loosened, remove them. |
| ⑥ | Ring gear | 1 | |
| ⑦ | Ring gear shim | 2 | |

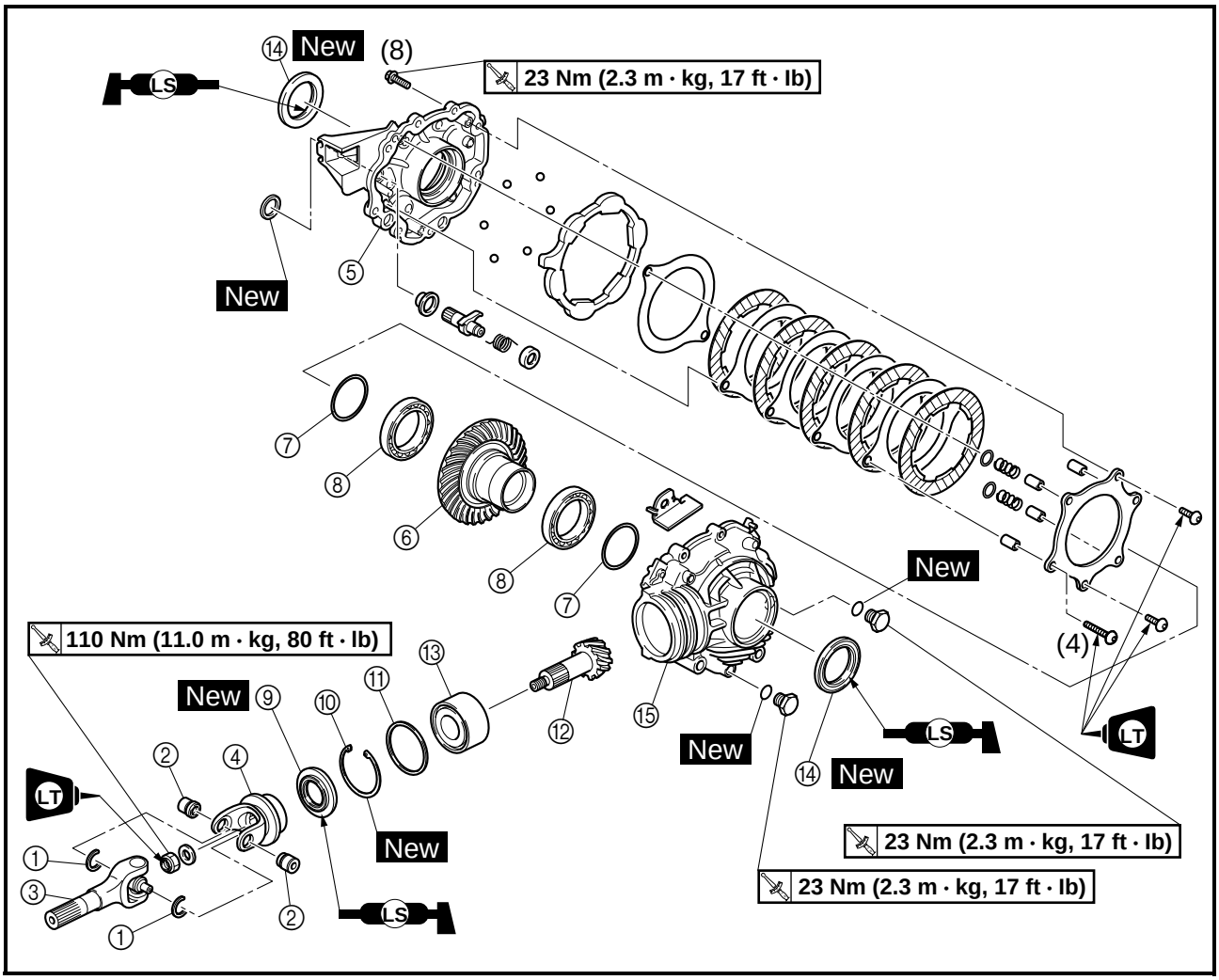


| Order | Job/Part | Q'ty | Remarks |
|---|---|---|---|
| ⑧ | Bearing | 2 | Refer to "DISASSEMBLING THE FINAL DRIVE PINION GEAR AND BEARING" and "INSTALLING THE FINAL DRIVE PINION GEAR AND BEARING". |
| ⑨ | Oil seal | 1 | |
| ⑩ | Circlip | 1 | |
| ⑪ | Thrust washer | 1 | |
| ⑫ | Final drive pinion gear | 1 | |
| ⑬ | Bearing | 1 | |
| ⑭ | Oil seal | 2 | |
| ⑮ | Final gear case (left side) | 1 | |
| | | | For assembly, reverse the disassembly procedure. |

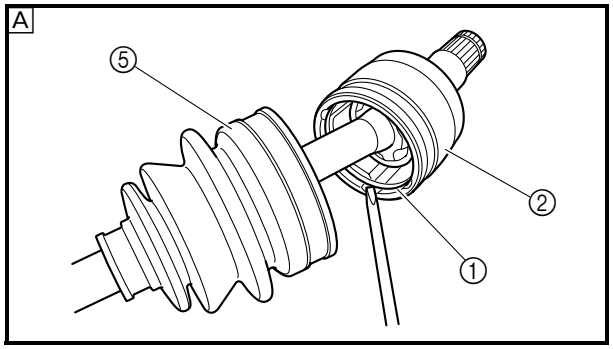


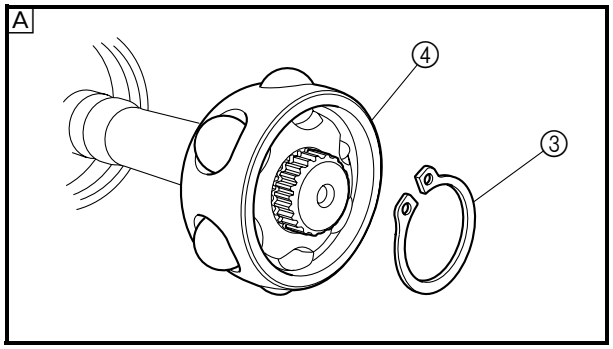


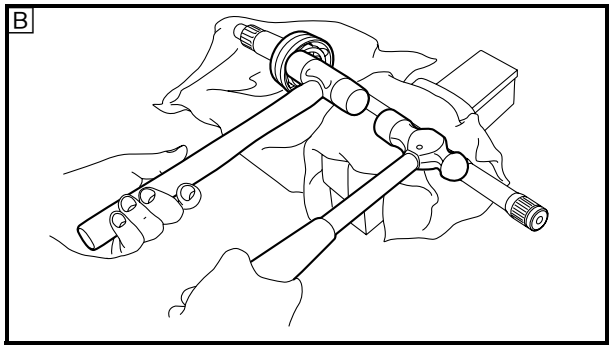


## REMOVING THE REAR CONSTANT VELOCITY JOINTS

1. Remove:
   - boot bands
   - clip ① New
   - double off-set joint ②
   - circlip ③ New
   - ball bearing ④
   - dust boot ⑤

**NOTE:**
Before removing the clip ①, slide the dust boot away from the double off-set joint.

A Gear case side

2. Remove:
   - boot bands
   - off-set joint
   - clip New
   - dust boots

**NOTE:**
Secure the joint shaft in a vise, and then remove the off-set joint using hammers.

B Wheel side

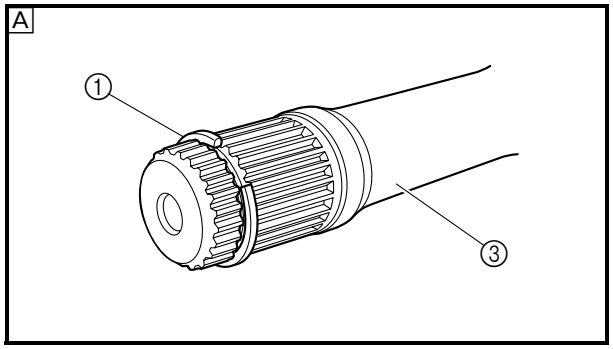


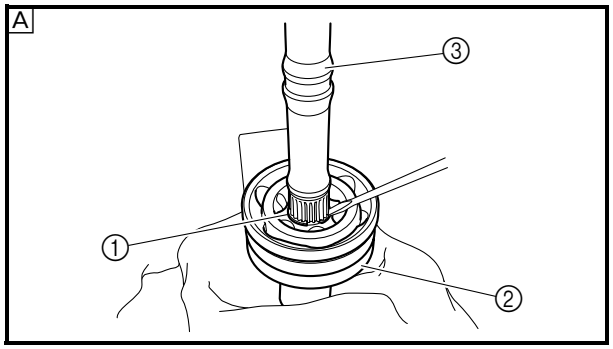


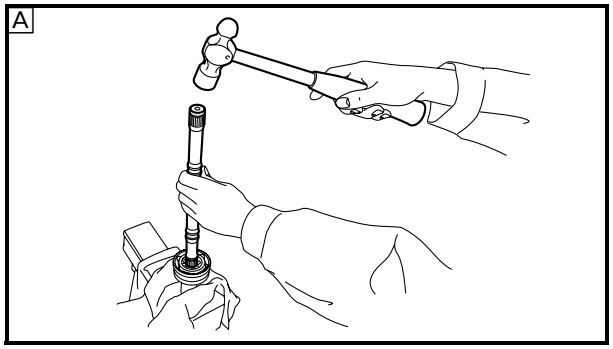


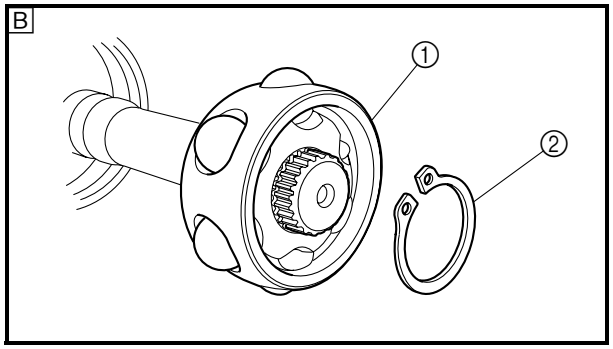


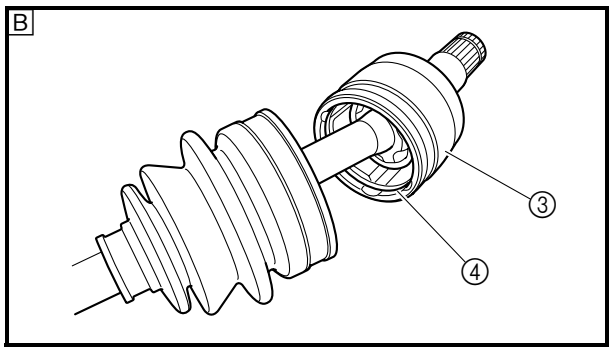


## ASSEMBLING THE REAR CONSTANT VELOCITY JOINTS

1. Install:
   - dust boot
   - clip ① New
   - off-set joint ②
   - joint shaft ③

▼▼▼▼▼▼▼▼▼▼▼▼▼▼▼▼▼▼▼▼▼▼▼▼▼▼▼▼▼▼▼▼▼▼▼▼▼▼

a. Install the clip ①.
b. Install the off-set joint ②.

**NOTE:**
- Install the clip ① into the groove in the joint shaft as shown.
- Secure the off-set joint in a vise, and then fit the joint shaft into the off-set joint using a hammer.

▲▲▲▲▲▲▲▲▲▲▲▲▲▲▲▲▲▲▲▲▲▲▲▲▲▲▲▲▲▲▲▲▲▲▲▲▲▲

A Wheel side

2. Install:
   - dust boot
   - ball bearing ①
   - circlip ② New
   - double off-set joint ③
   - clip ④ New

**NOTE:**
- Securely install the circlip into the groove in the joint shaft.
- Securely install the clip into the groove in the double off-set joint.

B Gear case side

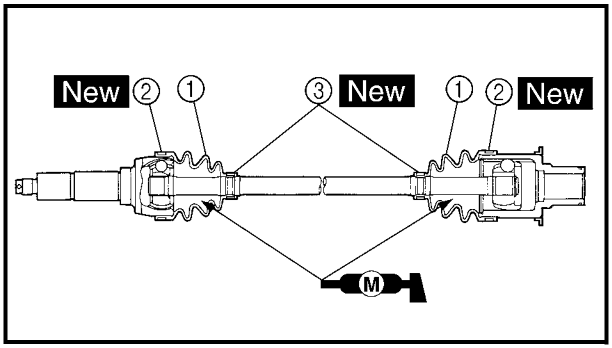


3. Apply:
   • molybdenum disulfide grease
   (into the ball joint assembly)

**NOTE:**
Molybdenum disulfide grease is included in the repair kit.

4. Install:
   • dust boots ①
   • boot bands ②, ③ New

▼▼▼▼▼▼▼▼▼▼▼▼▼▼▼▼▼▼▼▼▼▼▼▼▼▼▼▼▼▼▼▼▼▼

a. Apply molybdenum disulfide grease into the dust boots.

| |
|---|
| **Molybdenum disulfide grease**<br>**40 g (1.4 oz) per dust boot (rear wheel side)**<br>**60 g (2.1 oz) per dust boot (final gear case side)** |

b. Install the dust boots.
c. Install the dust boot bands.

**NOTE:**
• The new boot bands may differ from the original ones.
• The dust boots should be fastened with the boot bands ③ at the grooves in the joint shaft.

▲▲▲▲▲▲▲▲▲▲▲▲▲▲▲▲▲▲▲▲▲▲▲▲▲▲▲▲▲▲▲▲▲▲

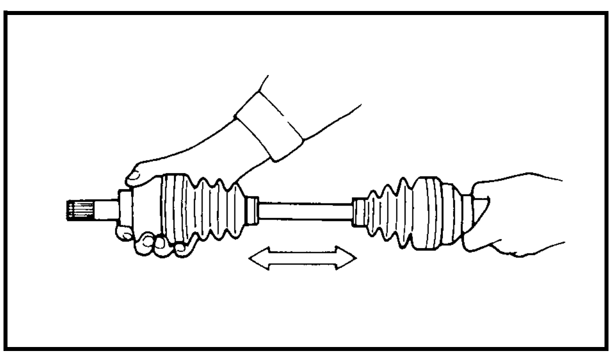

5. Check:
   • thrust movement free play
   Excessive play → Replace the joint assembly.

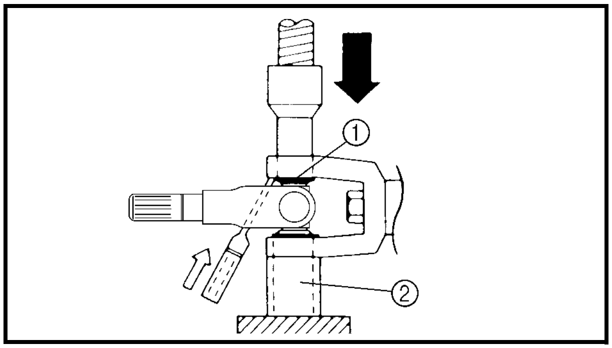


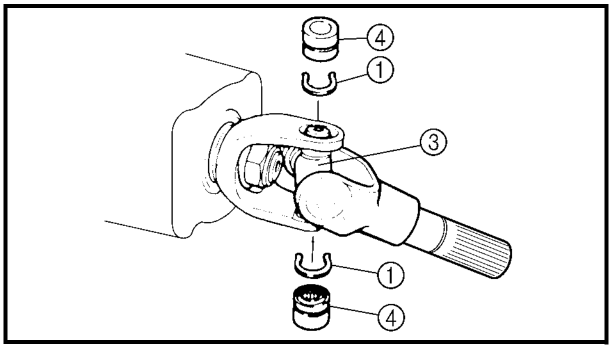


**DISASSEMBLING THE FINAL DRIVE GEAR**

1. Remove:
   - drive shaft assembly

▼▼▼▼▼▼▼▼▼▼▼▼▼▼▼▼▼▼▼▼▼▼▼▼▼▼▼▼▼▼▼▼▼▼

a. Remove the circlips ①.
b. Place the universal joint in a press.
c. With a suitable diameter pipe ② beneath the yoke ③, press the bearing ④ into the pipe as shown.

**NOTE:**
It may be necessary to lightly tap the yoke with a punch.

d. Repeat the steps for the opposite bearing.
e. Remove the yoke.

**NOTE:**
It may be necessary to lightly tap the yoke with a punch.

▲▲▲▲▲▲▲▲▲▲▲▲▲▲▲▲▲▲▲▲▲▲▲▲▲▲▲▲▲▲▲▲▲▲

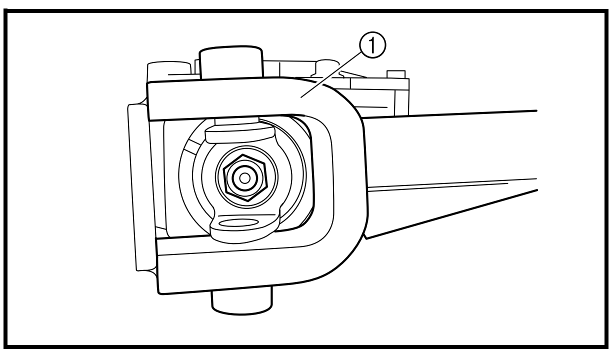


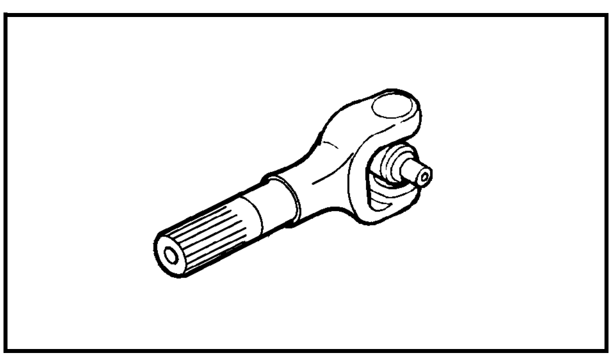

2. Remove:
   - universal joint yoke

| | |
|---|---|
| | **Universal joint holder**<br>**90890-04062, YM-04062** |

**NOTE:**
Use the universal joint holder ① to hold the universal joint yoke.

**CHECKING THE DRIVE SHAFT/UNIVERSAL JOINT YOKE**

1. Check:
   - drive shaft/universal joint yoke (splines)
     Wear/damage → Replace.

**CHECKING THE FINAL DRIVE GEAR**

1. Check:
   - final gear case
     Cracks/damage → Replace.

**NOTE:**
When the final gear case is replaced, be sure to adjust the shim of the ring gear.

2. Check:
   - gear teeth
     Pitting/galling/wear → Replace the drive pinion gear and ring gear as a set.

**NOTE:**
When the ring gear is replaced, be sure to adjust the shim of the ring gear.

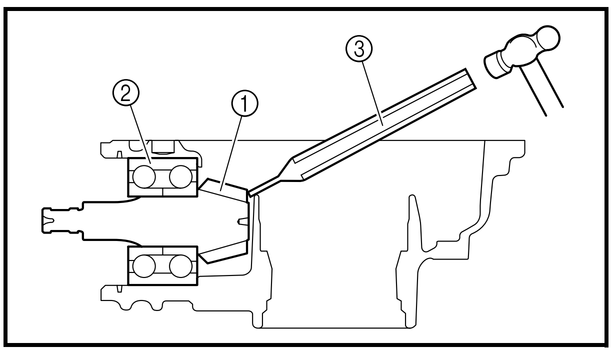


**DISASSEMBLING THE FINAL DRIVE PINION GEAR AND BEARING**

1. Remove:
   - final drive pinion gear ①
   - final drive pinion gear bearing ②

▼▼▼▼▼▼▼▼▼▼▼▼▼▼▼▼▼▼▼▼▼▼▼▼▼▼▼▼▼▼▼▼▼▼▼

a. Heat the final gear case only to 150 °C (302 °F).
b. Remove the final drive pinion gear assembly with an appropriately shaped punch ③.
c. Remove the final drive pinion gear bearing ② from the final drive pinion gear ①.

**NOTE:**
The removal of the final drive pinion gear is difficult and seldom necessary.

▲▲▲▲▲▲▲▲▲▲▲▲▲▲▲▲▲▲▲▲▲▲▲▲▲▲▲▲▲▲▲▲▲▲▲

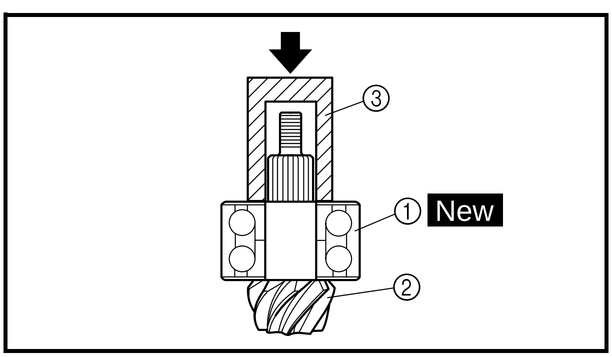


**INSTALLING THE FINAL DRIVE PINION GEAR AND BEARING**

1. Install:
   - final drive pinion gear bearing ① New
   - final drive pinion gear ②

**NOTE:**
Use a suitable press tool ③ and a press to install the final drive pinion gear bearing into the final drive pinion gear.

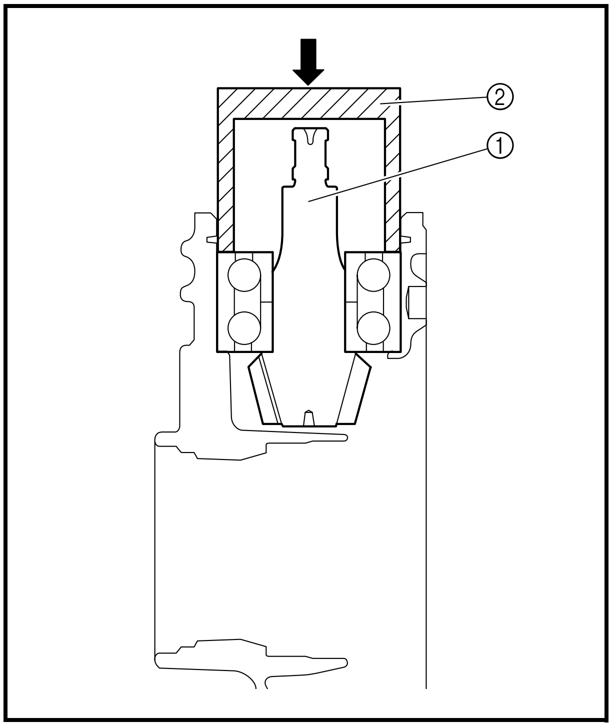


2. Install:
   - final drive pinion gear assembly ①

**NOTE:**

Use a suitable press tool ② and a press to install the above components into the final gear case.

---

**POSITIONING THE FINAL DRIVE PINION GEAR AND RING GEAR**

When the final drive pinion gear, ring gear, and/or final gear case are replaced, be sure to adjust the positions of ring gear using the shim(s).

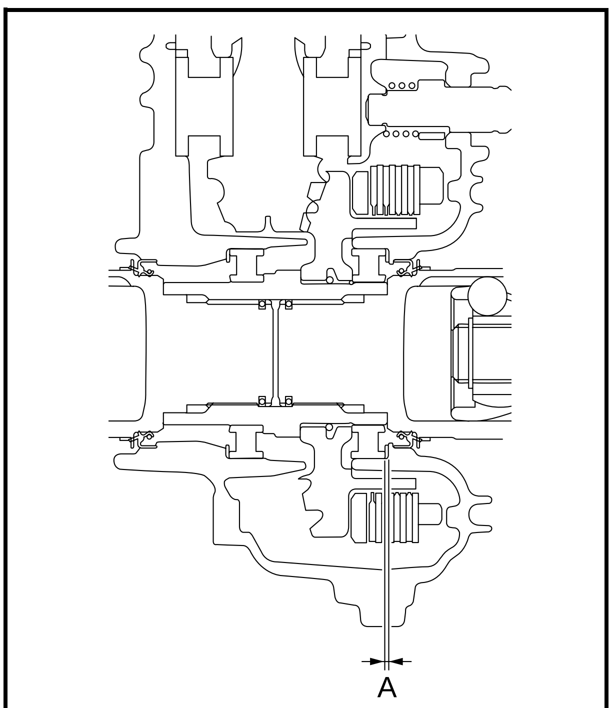


**MEASURING THE RING GEAR THRUST CLEARANCE**

1. Measure/adjust:
   - ring gear thrust clearance "A"

▼▼▼▼▼▼▼▼▼▼▼▼▼▼▼▼▼▼▼▼▼▼▼▼▼▼▼▼▼▼▼▼▼▼▼▼

a. Place four pieces of Plastigauge® between the thrust washer and the bearing.

**NOTE:**

Install the thinnest ring gear shim from the following chart.

---

| | Ring gear shim |
|---|---|
| Thickness (mm) | 0.25 0.97 1.04<br>1.12 1.19 1.27<br>1.35 1.42 1.50<br>1.58 |

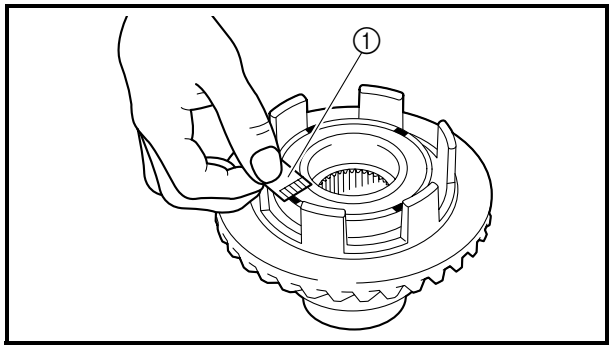


b. Install the ring gear assembly and tighten the bolts to specification.

| | |
|---|---|
| | **M8 bolts (bearing housing)**<br>**23 Nm (2.3 m · kg, 17 ft · lb)** |

**NOTE:**
Do not turn the final drive pinion gear and ring gear when measuring the clearance with Plastigauge®.

c. Remove the ring gear assembly.
d. Measure the thrust clearance. Calculate the width of the flattened Plastigauge® ①.

| | |
|---|---|
| | **Ring gear thrust clearance**<br>**Less than 0.18 mm (0.007 in)** |

e. If out of specification, repeat the measurement steps with a slightly thicker thrust washer until the ring gear thrust clearance is within the specified limits.

▲▲▲▲▲▲▲▲▲▲▲▲▲▲▲▲▲▲▲▲▲▲▲▲▲▲▲▲▲▲▲▲▲▲

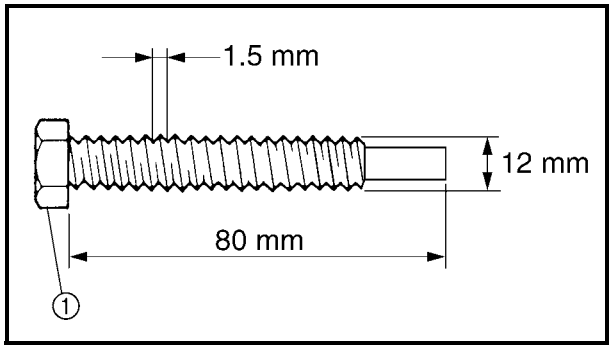


**MEASUREMENT THE FINAL GEAR LASH**

1. Remove:
   - final gear case filler bolt
   - O-ring
2. Install:
   - ring gear fix bolt ①
     (into the filler bolt hole)

| | |
|---|---|
| | **Ring gear fix bolt (M12)**<br>**90890-01530, YM-01530** |

**CAUTION:**
**Finger tighten the bolt until it holds the ring gear. Otherwise, the ring gear will be damaged.**

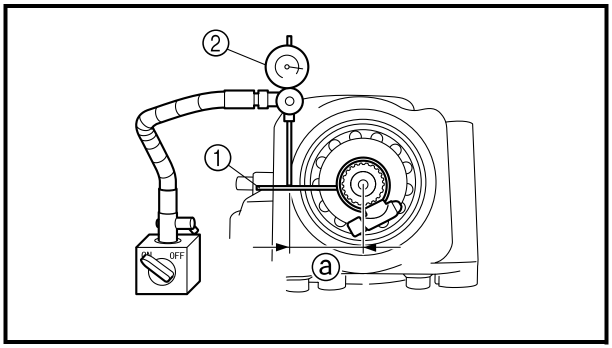


3. Attach:
   - gear lash measurement tool ①
   - dial gauge ②

| | |
|---|---|
| | **Gear lash measurement tool 90890-01467, YM-01467** |

ⓐ Measuring point is 19.00 mm (0.75 in)

4. Measure:
   - gear lash
     Gently rotate the gear coupling from engagement to engagement.

| | |
|---|---|
| | **Final gear lash 0.1 ~ 0.2 mm (0.004 ~ 0.008 in)** |

**NOTE:**
Measure the gear lash at four positions. Rotate the shaft 90° each time.

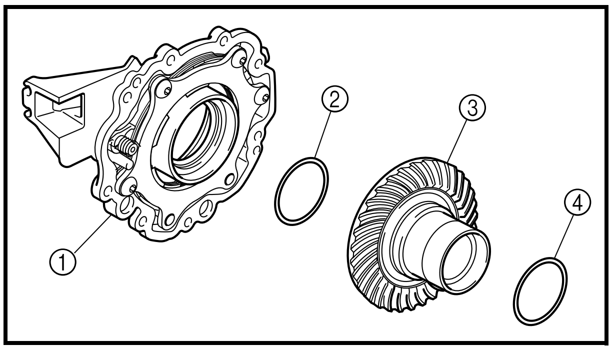


**ADJUSTING THE FINAL GEAR LASH**

1. Remove:
   - final gear case (right side) ①
   - ring gear shim ②
   - ring gear ③
   - ring gear shim ④
2. Adjust:
   - gear lash

▼▼▼▼▼▼▼▼▼▼▼▼▼▼▼▼▼▼▼▼▼▼▼▼▼▼▼▼▼▼▼▼▼▼▼▼

a. Select a suitable shim(s) using the following chart.

| | |
|---|---|
| **Too little gear lash** | **Increase shim ④ thickness.** |
| **Too large gear lash** | **Reduce shim ④ thickness.** |

b. If increased by more than 0.2 mm (0.008 in):
   Reduce the ring gear shim ② thickness by 0.2 mm (0.008 in) for every 0.2 mm (0.008 in) of ring gear shim ④ increase.

c. If reduced by more than 0.2 mm (0.008 in): Increase the ring gear shim ② thickness by 0.2 mm (0.008 in) for every 0.2 mm (0.008 in) that the ring gear shim ④ is decreased.

| Ring gear shim ② and ④ | |
|---|---|
| Thickness (mm) | 0.25 0.97 1.04<br>1.12 1.19 1.27<br>1.35 1.42 1.50<br>1.58 |

**NOTE:**
Be sure to use one of each of the ring gear shims ② and ④ to obtain the shim thickness.

▲▲▲▲▲▲▲▲▲▲▲▲▲▲▲▲▲▲▲▲▲▲▲▲▲▲▲▲▲▲▲▲▲▲

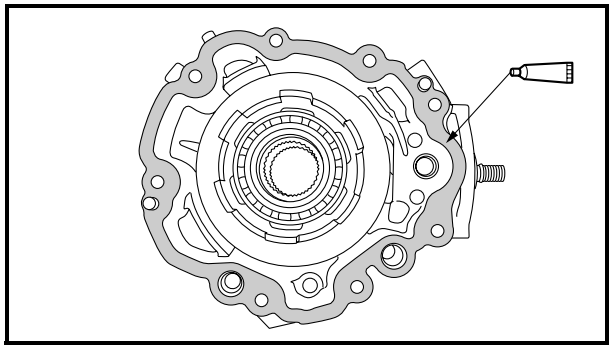

**ASSEMBLING THE FINAL DRIVE GEAR**

1. Apply:
   - sealant
     (to the mating surfaces of both case halves)

| | |
|---|---|
| | **Yamaha bond No. 1215<br>90890-85505<br>(Three bond No.1215®)** |

2. Fit the final gear case (right side) onto the final gear case (left side). Tap lightly on the final gear case (right side) with a soft hammer.
3. Install:
   - final gear case bolts

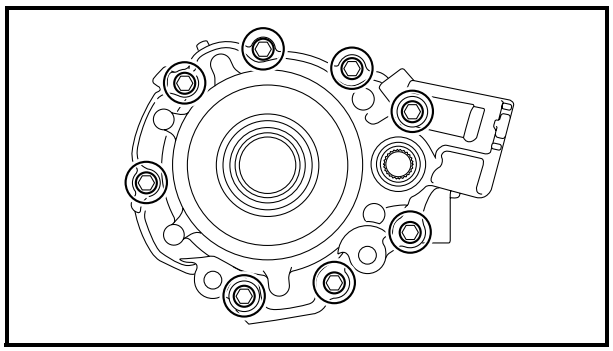

4. Tighten:
   - final gear case bolts

| | |
|---|---|
| | **23 Nm (2.3 m · kg, 17 ft · lb)** |

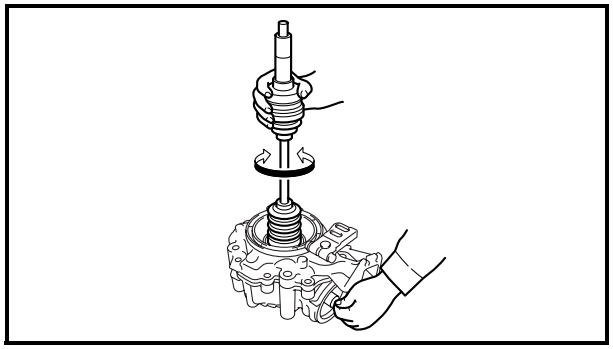

5. Check:
   - final gear operation
     Unsmooth operation → Replace the final gear assembly.
     Insert the double off-set joint into the final gear, and turn the gear back and forth.

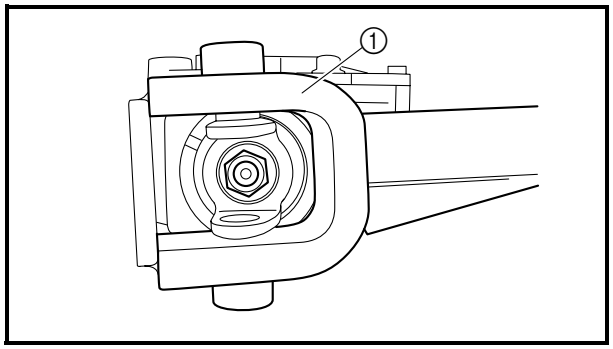


6. Install:
   - universal joint yoke
   - washer
   - nut **110 Nm (11.0 m · kg, 80 ft · lb)**

**NOTE:**
- Apply locking agent (LOCTITE®) to nut threads.
- Use the universal joint holder 1 to hold the yoke.

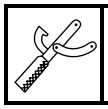

**Universal joint holder**
**90890-04062, YM-04062**

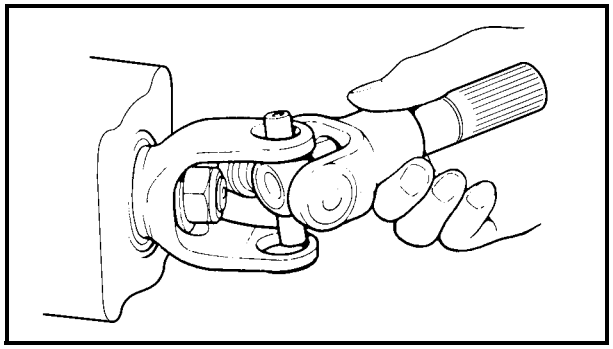

7. Install:
   - drive shaft assembly

▼▼▼▼▼▼▼▼▼▼▼▼▼▼▼▼▼▼▼▼▼▼▼▼▼▼▼▼▼▼▼▼▼▼

a. Install the opposite yoke into the U-joint.
b. Apply wheel bearing grease to the bearings.
c. Install the bearings ① onto the yoke.

**CAUTION:**

**Check each bearing. The needles can easily fall out of their races. Slide the yoke back and forth on the bearings; the yoke will not go all the way onto a bearing if a needle is out of place.**

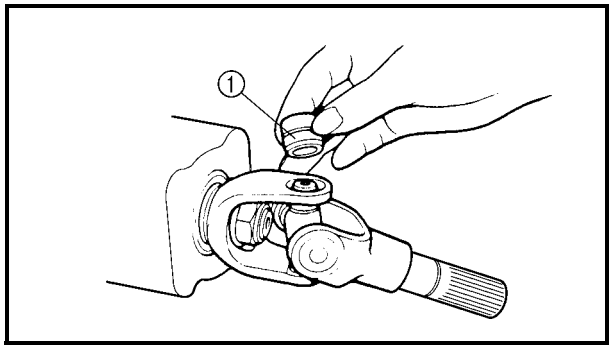


d. Press the bearings into the universal joint using a suitable socket.

**NOTE:**

The bearing must be inserted far enough into the universal joint so that the circlip can be installed.

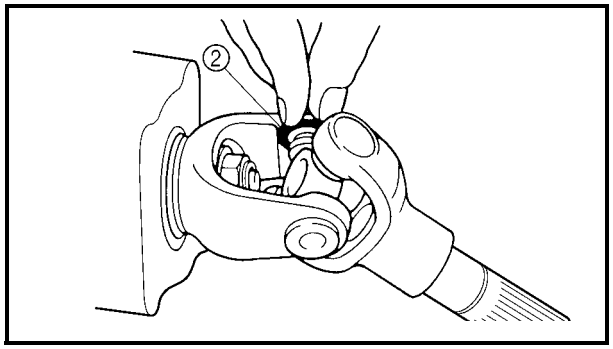


e. Install the circlips ② into the groove of each bearing.

▲▲▲▲▲▲▲▲▲▲▲▲▲▲▲▲▲▲▲▲▲▲▲▲▲▲▲▲▲▲▲▲▲▲

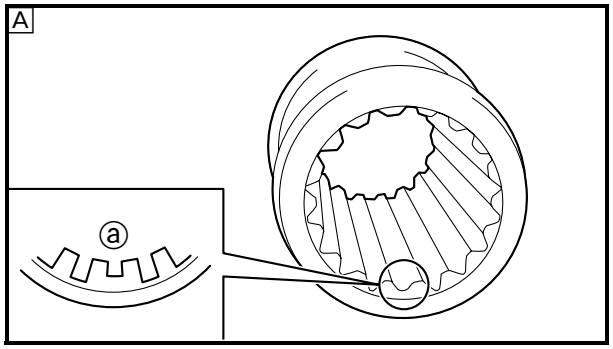


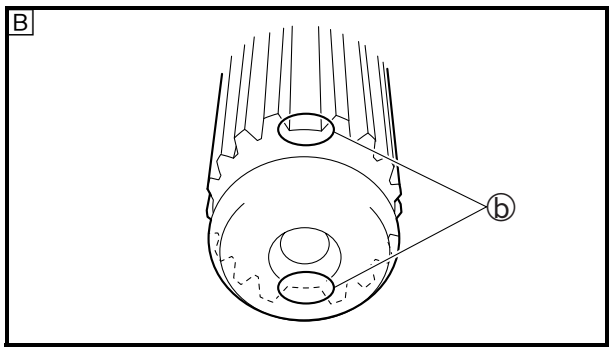


**INSTALLING THE FINAL GEAR CASE**

1. Install:
   - final gear case

**NOTE:**

Align the shallow groove ⓐ in the universal joint yoke (front) with a groove ⓑ in the universal joint yoke (rear).

A Universal joint yoke (front)
B Drive shaft/universal joint yoke (rear)

2. Adjust:
   - rear brake lever free play
   - brake pedal free play
     Refer to “ADJUSTING THE REAR BRAKE” in chapter 3.

# CHASSIS

## FRONT AND REAR WHEELS

### FRONT WHEELS

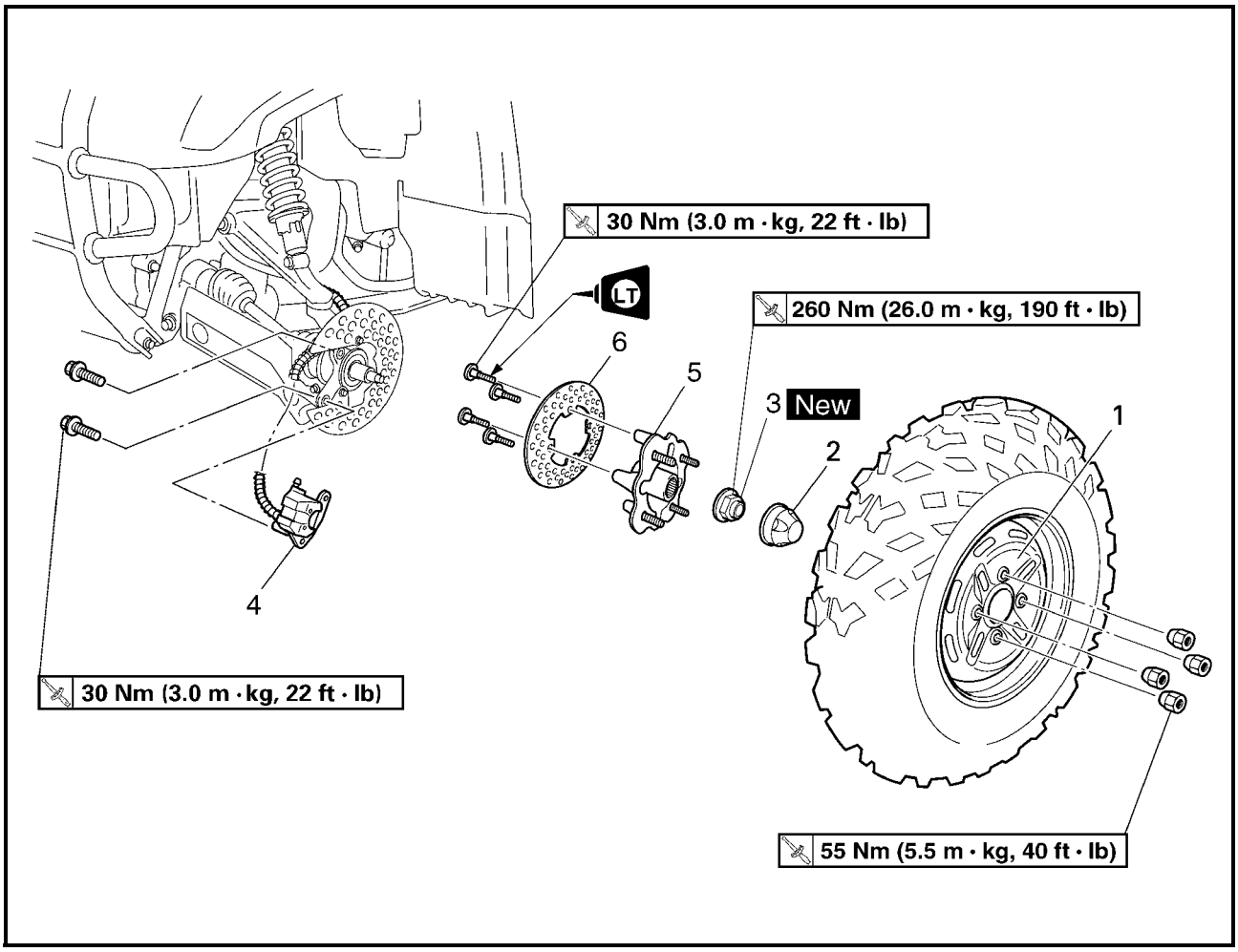


| Order | Job/Part | Q'ty | Remarks |
|---|---|---|---|
| | **Removing the front wheels** | | Remove the parts in the order listed.<br>The following procedure applies to both of the front wheels.<br>Place the vehicle on a level surface.<br>**WARNING**<br>**Securely support the vehicle so there is no danger of it falling over.** |
| 1 | Front wheel | 1 | Refer to "INSTALLING THE WHEELS". |
| 2 | Wheel cap | 1 | Refer to "INSTALLING THE WHEEL HUBS". |
| 3 | Front wheel axle nut | 1 | |
| 4 | Front brake caliper assembly | 1 | **NOTE:**<br>Do not squeeze the brake lever when the brake caliper is off of the brake disc as the brake pads will be forced shut. |

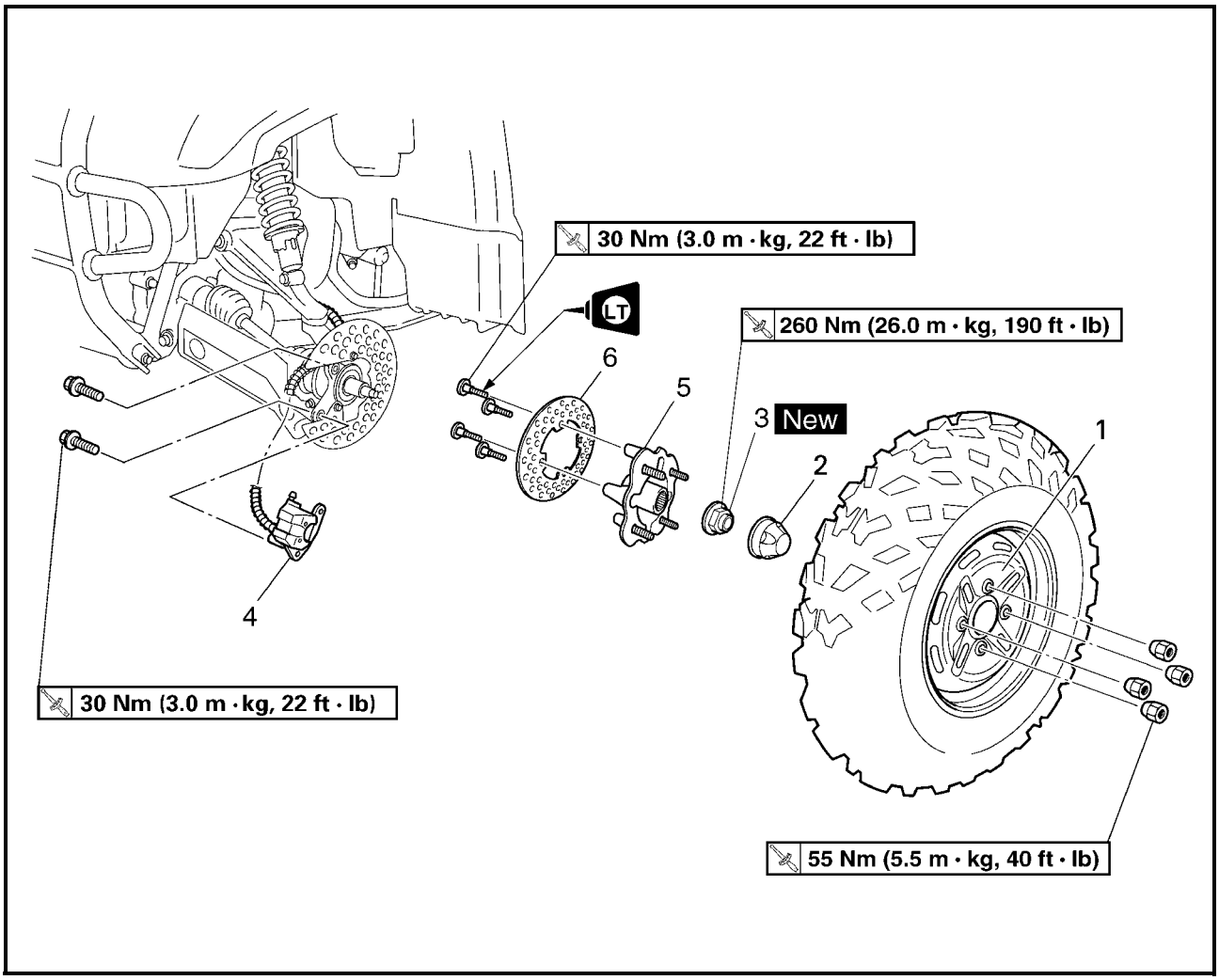


| Order | Job/Part | Q'ty | Remarks |
|---|---|---|---|
| 5 | Front wheel hub | 1 | |
| 6 | Front brake disc | 1 | |
| | | | For installation, reverse the removal procedure. |

## REAR WHEELS

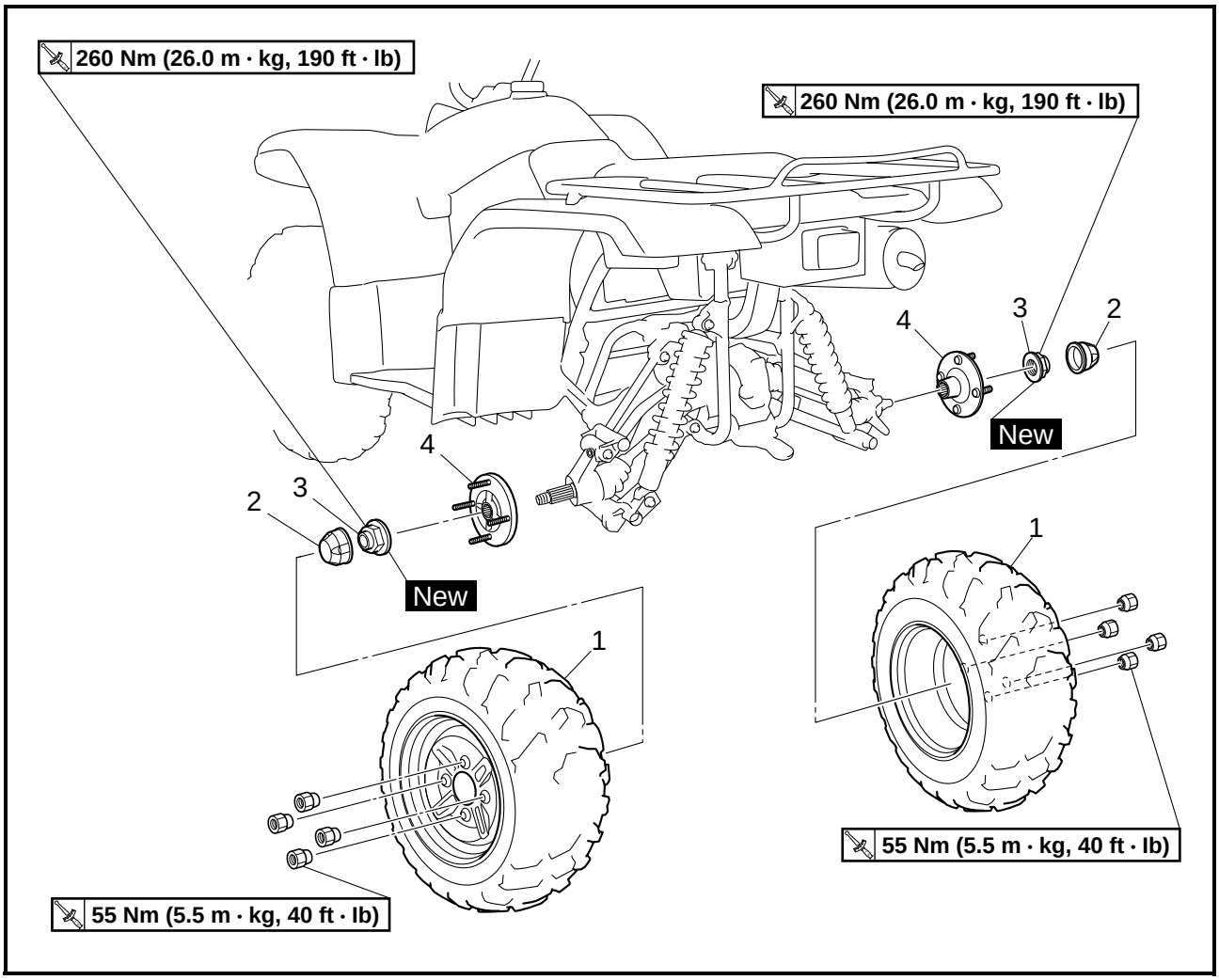


| Order | Job/Part | Q'ty | Remarks |
|---|---|---|---|
| | **Removing the rear wheels** | | Remove the parts in the order listed.<br>Place the vehicle on a level surface.<br>**WARNING**<br>**Securely support the vehicle so there is no danger of it falling over.** |
| 1 | Rear wheel | 2 | Refer to "INSTALLING THE WHEELS". |
| 2 | Wheel cap | 2 | |
| 3 | Rear wheel axle nut | 2 | Refer to "INSTALLING THE WHEEL HUBS". |
| 4 | Rear wheel hub | 2 | For installation, reverse the removal procedure. |

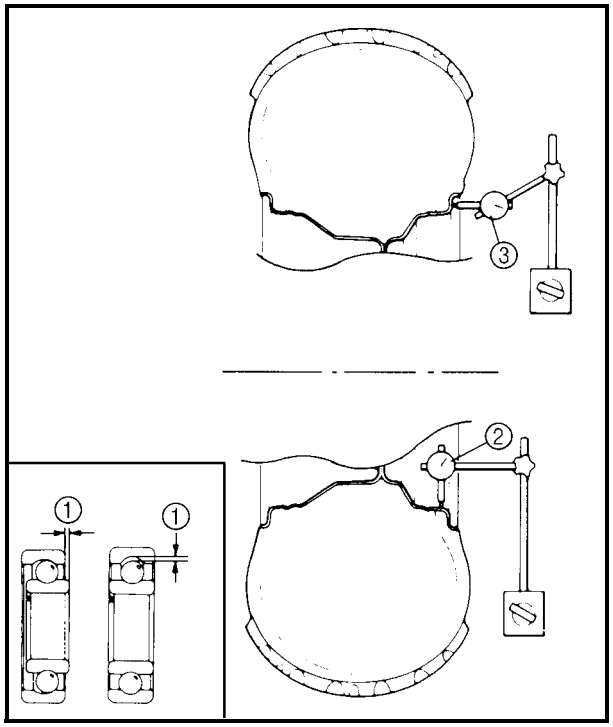


### CHECKING THE WHEELS

1. Check:
   - wheel
2. Measure:
   - wheel runout
     Over the specified limit → Replace the wheel or check the wheel bearing plays ①.

**Wheel runout limit**
**Front**
**Radial ②: 2.0 mm (0.08 in)**
**Lateral ③: 2.0 mm (0.08 in)**
**Rear**
**Radial ②: 2.0 mm (0.08 in)**
**Lateral ③: 2.0 mm (0.08 in)**

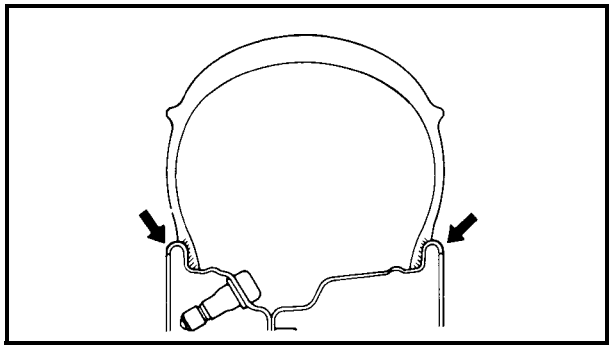

3. Check:
   - wheel balance
     Out of balance → Adjust.

**WARNING**

**After replacing the tire, ride conservatively to allow the tire to be properly seated in the rim. Failure to do so may cause an accident resulting in vehicle damage and possible operator injury.**

### CHECKING THE WHEEL HUBS

1. Check:
   - wheel hub
     Cracks/damage → Replace.
   - splines (wheel hub)
     Wear/damage → Replace.

### CHECKING THE BRAKE DISCS

1. Check:
   - brake disc
     Galling/damage → Replace.

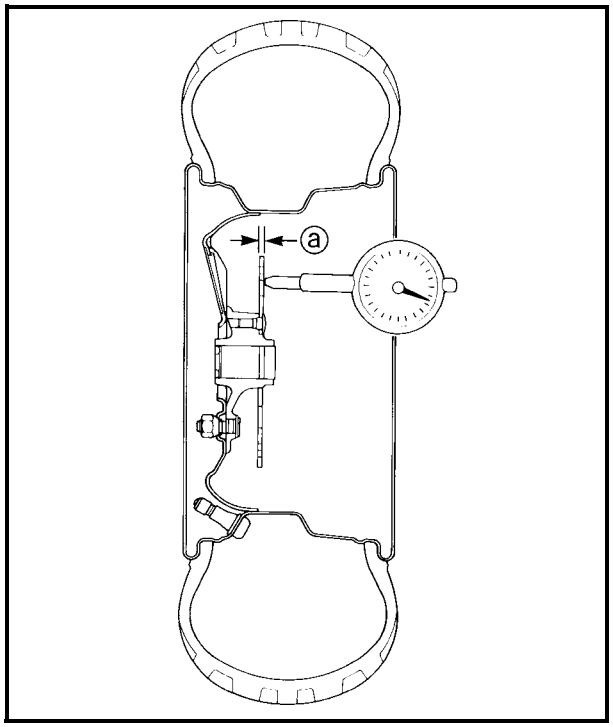


2. Measure:
   - brake disc deflection
     Out of specification → Check the wheel runout.
     If wheel runout is within the limits, replace the brake disc.

| | |
|---|---|
| | **Brake disc maximum deflection**<br>**0.15 mm (0.006 in)** |

   - brake disc thickness ⓐ
     Out of specification → Replace.

| | |
|---|---|
| | **Brake disc minimum thickness**<br>**3.0 mm (0.12 in)** |

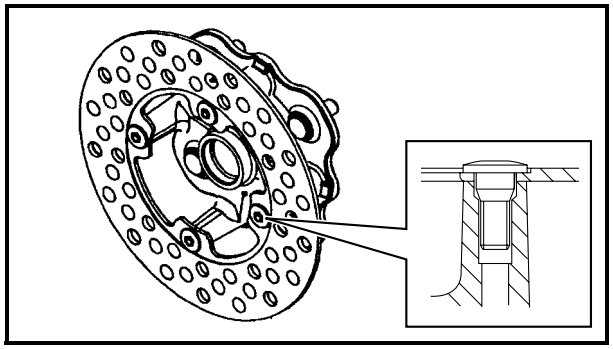

### INSTALLING THE BRAKE DISCS

1. Install:
   - brake discs

| | |
|---|---|
| | **Brake disc bolt**<br>**30 Nm (3.0 m · kg, 22 ft · lb)**<br>**LOCTITE®** |

**NOTE:**
Install the brake discs with their spot-faced side facing the bolt heads.

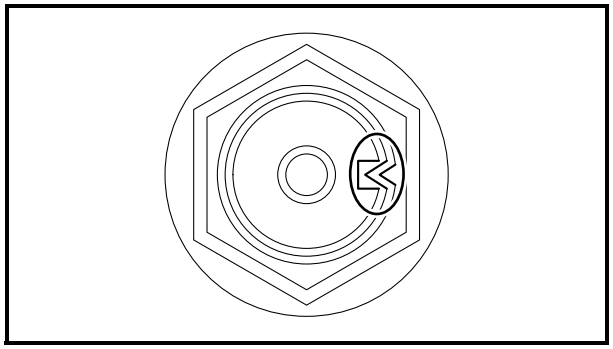

### INSTALLING THE WHEEL HUBS

1. Install:
   - wheel axle nut New

**260 Nm (26.0 m · kg, 190 ft · lb)**

**NOTE:**
- Do not apply oil to the seat of the nut.
- After tightening the nut, stake the collar of the nut into the notch of the shaft.

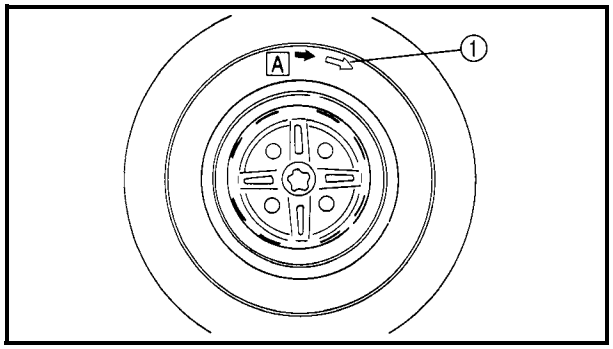


### INSTALLING THE WHEELS

1. Install:
   - wheel

**NOTE:**
The arrow mark ① on the tire must point in the direction of rotation A of the wheel.

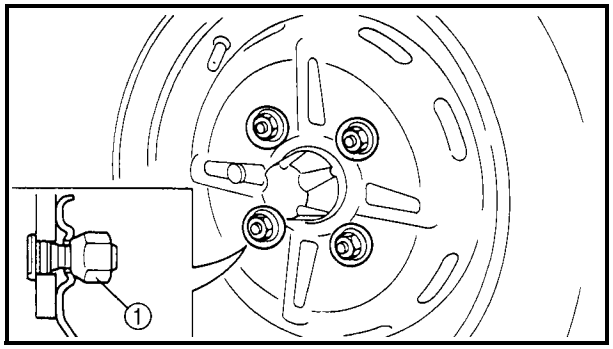


2. Tighten:
   - wheel nuts ① **55 Nm (5.5 m · kg, 40 ft · lb)**

**WARNING**

**Tapered wheel nuts ① are used for both the front and rear wheels. Install each nut with its tapered side towards the wheel.**

**NOTE:**
Tighten the nuts in stages and in a crisscross pattern.

# FRONT BRAKE

## FRONT BRAKE PADS

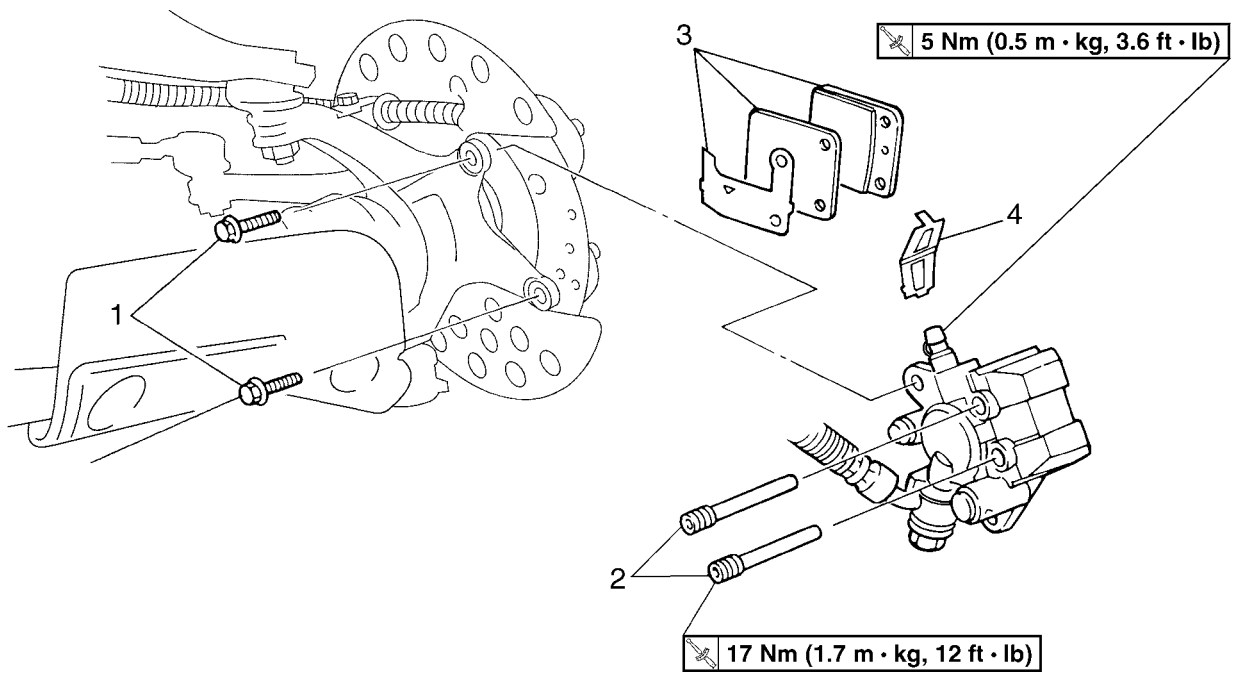


| Order | Job/Part | Q'ty | Remarks |
|---|---|---|---|
| | **Removing the front brake pads** | | Remove the parts in the order listed. The following procedure applies to both of the front brake calipers. |
| | Front wheel | | Refer to "FRONT AND REAR WHEELS". |
| 1 | Brake caliper mounting bolt | 2 | Refer to "REPLACING THE FRONT BRAKE PADS". |
| 2 | Brake pad holding bolt | 2 | |
| 3 | Brake pad/brake pad shim | 2/1 | |
| 4 | Brake pad spring | 1 | |
| | | | For installation, reverse the removal procedure. |

**CAUTION:**

**Disc brake components rarely require disassembly. DO NOT:**

- **disassemble components unless absolutely necessary;**
- **use solvents on internal brake components;**
- **use spent brake fluid for cleaning; (use only clean brake fluid)**
- **allow brake fluid to come in contact with the eyes, as this may cause eye injury;**
- **splash brake fluid onto painted surfaces or plastic parts, as this may cause damage;**
- **disconnect any hydraulic connection, as this would require the entire brake system to be disassembled, drained, cleaned, properly filled and bled after reassembly.**

**REPLACING THE FRONT BRAKE PADS**

**NOTE:**

It is not necessary to disassemble the brake caliper and brake hose to replace the brake pads.

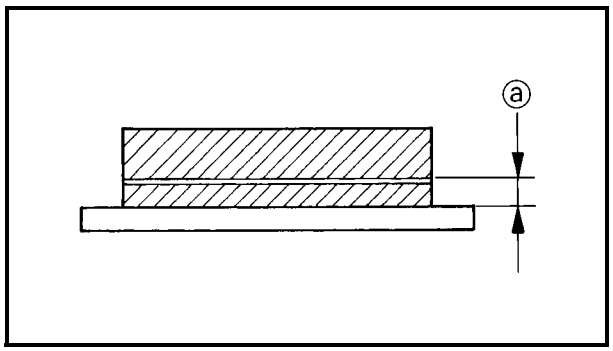


1. Measure:
   - brake pad wear limit ⓐ
     Out of specification → Replace the brake pads as a set.

| | |
|---|---|
| | **Brake pad wear limit**<br>**1.0 mm (0.04 in)** |

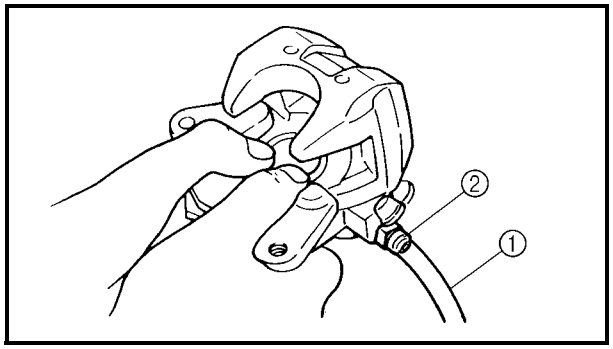


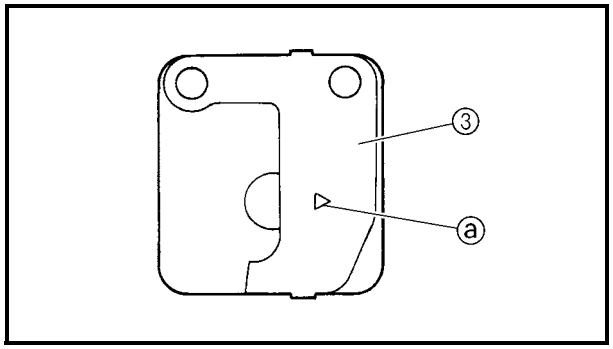


2. Install:
   - brake pad spring
   - brake pads
   - brake pad shim

**NOTE:**
Always install new brake pads, brake pad shim and brake pad spring as a set.

▼▼▼▼▼▼▼▼▼▼▼▼▼▼▼▼▼▼▼▼▼▼▼▼▼▼▼▼▼▼▼▼▼▼▼▼▼▼

a. Connect a suitable hose ① tightly to the brake caliper bleed screw ②. Put the other end of this hose into an open container.
b. Loosen the brake caliper bleed screw and, using a finger, push the caliper piston into the brake caliper.
c. Tighten the brake caliper bleed screw.

| | |
|---|---|
| | **Brake caliper bleed screw**<br>**5 Nm (0.5 m · kg, 3.6 ft · lb)** |

d. Install new brake pads, new pad shim ③ and a new brake pad spring.

**NOTE:**
The arrow mark ⓐ on the pad shim must point in the direction of the disc rotation.

e. Install the holding bolts and brake caliper.

| | |
|---|---|
| | **Brake pad holding bolt**<br>**17 Nm (1.7 m · kg, 12 ft · lb)**<br>**Brake caliper mounting bolt**<br>**30 Nm (3.0 m · kg, 22 ft · lb)** |

▲▲▲▲▲▲▲▲▲▲▲▲▲▲▲▲▲▲▲▲▲▲▲▲▲▲▲▲▲▲▲▲▲▲▲▲▲▲

3. Check:
   - brake fluid level
     Refer to “CHECKING THE BRAKE FLUID LEVEL” in chapter 3.
4. Check:
   - brake lever operation
     Soft or spongy feeling → Bleed the front brake system.
     Refer to “BLEEDING THE HYDRAULIC BRAKE SYSTEM” in chapter 3.

## FRONT BRAKE MASTER CYLINDER

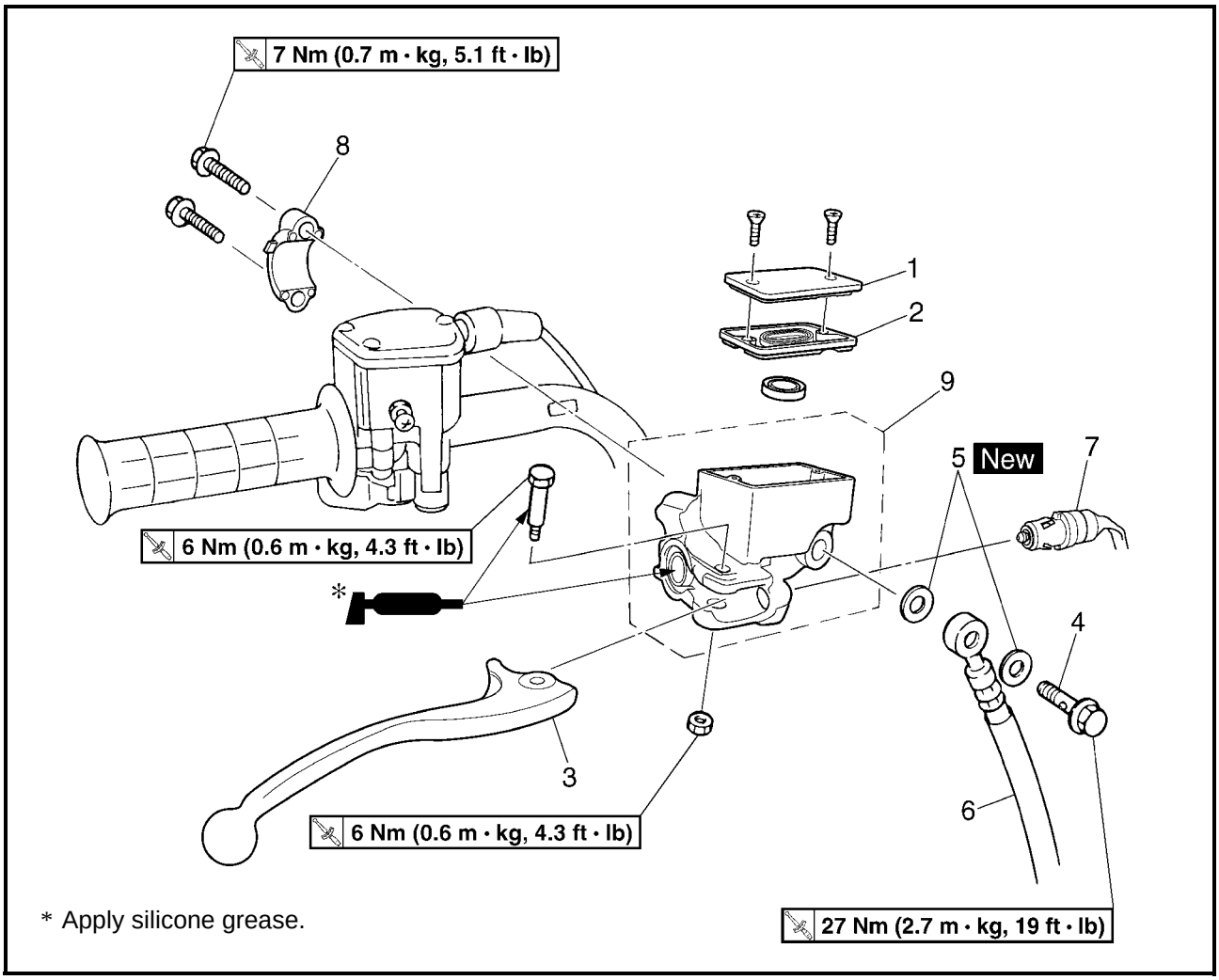


* Apply silicone grease.

| Order | Job/Part | Q'ty | Remarks |
|---|---|---|---|
| | **Removing the front brake master cylinder** | | Remove the parts in the order listed. |
| | Brake fluid | | Drain. |
| 1 | Brake fluid reservoir cap | 1 | |
| 2 | Brake fluid reservoir diaphragm | 1 | |
| 3 | Front brake lever | 1 | |
| 4 | Union bolt | 1 | Disconnect. Refer to "INSTALLING THE FRONT BRAKE MASTER CYLINDER". |
| 5 | Copper washer | 2 | |
| 6 | Brake hose | 1 | |
| 7 | Front brake light switch | 1 | |
| 8 | Brake master cylinder holder | 1 | |
| 9 | Brake master cylinder | 1 | |
| | | | For installation, reverse the removal procedure. |

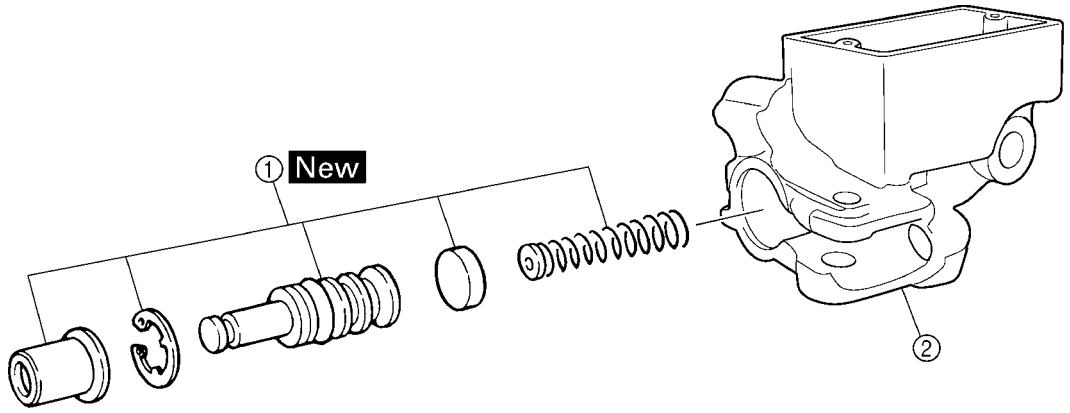


| Order | Job/Part | Q'ty | Remarks |
|---|---|---|---|
| | **Disassembling the front brake master cylinder** | | Remove the parts in the order listed. |
| ① | Brake master cylinder kit | 1 | Refer to "ASSEMBLING THE FRONT BRAKE MASTER CYLINDER". |
| ② | Brake master cylinder | 1 | |
| | | | For assembly, reverse the disassembly procedure. |

### CHECKING THE MASTER CYLINDER

1. Check:
   - brake master cylinder
     Wear/scratches → Replace the brake master cylinder assembly.
   - brake master cylinder body
     Cracks/damage → Replace.
   - brake fluid delivery passage
     (brake master cylinder body)
     Blockage → Blow out with compressed air.

EB702060

## ASSEMBLING THE FRONT BRAKE MASTER CYLINDER

**WARNING**

- **All internal brake components should be cleaned and lubricated with new brake fluid only before installation.**

| | |
|---|---|
| | **Recommended brake fluid**<br>**DOT 4** |

- **Whenever a master cylinder is disassembled, replace the piston seals and dust seals.**

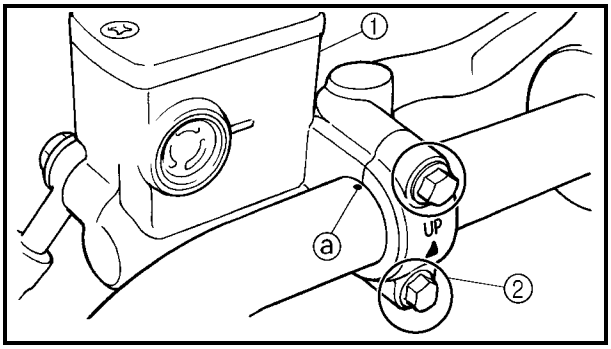


**INSTALLING THE FRONT BRAKE MASTER CYLINDER**

1. Install:
   - brake master cylinder ①
   - brake master cylinder holder ②

| | |
|---|---|
| | **7 Nm (0.7 m · kg, 5.1 ft · lb)** |

**NOTE:**
- The "UP" mark on the brake master cylinder holder ② should face up.
- Align the end of the brake master cylinder holder with the punch mark ⓐ in the handlebar.
- Tighten first the upper bolt, then the lower bolt.

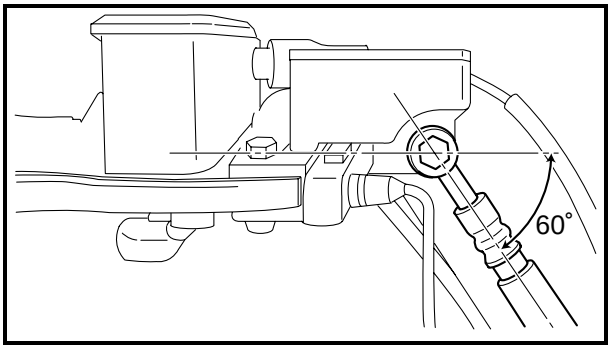


2. Install:
   - brake hose
   - copper washers New
   - union bolt

| | |
|---|---|
| | **27 Nm (2.7 m · kg, 19 ft · lb)** |

**NOTE:**
- Tighten the union bolt while holding the brake hose as shown.
- Turn the handlebar to the left and to the right to check that the brake hose does not touch other parts (throttle cable, wire harness, leads, etc.). Correct if necessary.

**WARNING**

**Proper brake hose routing is essential to insure safe vehicle operation. Refer to "CABLE ROUTING" in chapter 2.**

3. Fill:
   - brake fluid reservoir

| | |
|---|---|
| | **Recommended brake fluid DOT 4** |

**CAUTION:**

**Brake fluid may damage painted surfaces or plastic parts. Always clean up spilled brake fluid immediately.**

**WARNING**

- **Use only the designated quality brake fluid: other brake fluids may deteriorate the rubber seals, causing leakage and poor brake performance.**
- **Refill with the same type of brake fluid: mixing brake fluids may result in a harmful chemical reaction and lead to poor brake performance.**
- **Be careful that water does not enter the brake master cylinder when refilling. Water will significantly lower the boiling point of the brake fluid and may result in vapor lock.**

4. Air bleed:
   - brake system
     Refer to “BLEEDING THE HYDRAULIC BRAKE SYSTEM” in chapter 3.
5. Check:
   - brake fluid level
     Brake fluid level is under the “LOWER” level line → Fill up.
     Refer to “CHECKING THE BRAKE FLUID LEVEL” in chapter 3.

## FRONT BRAKE CALIPERS

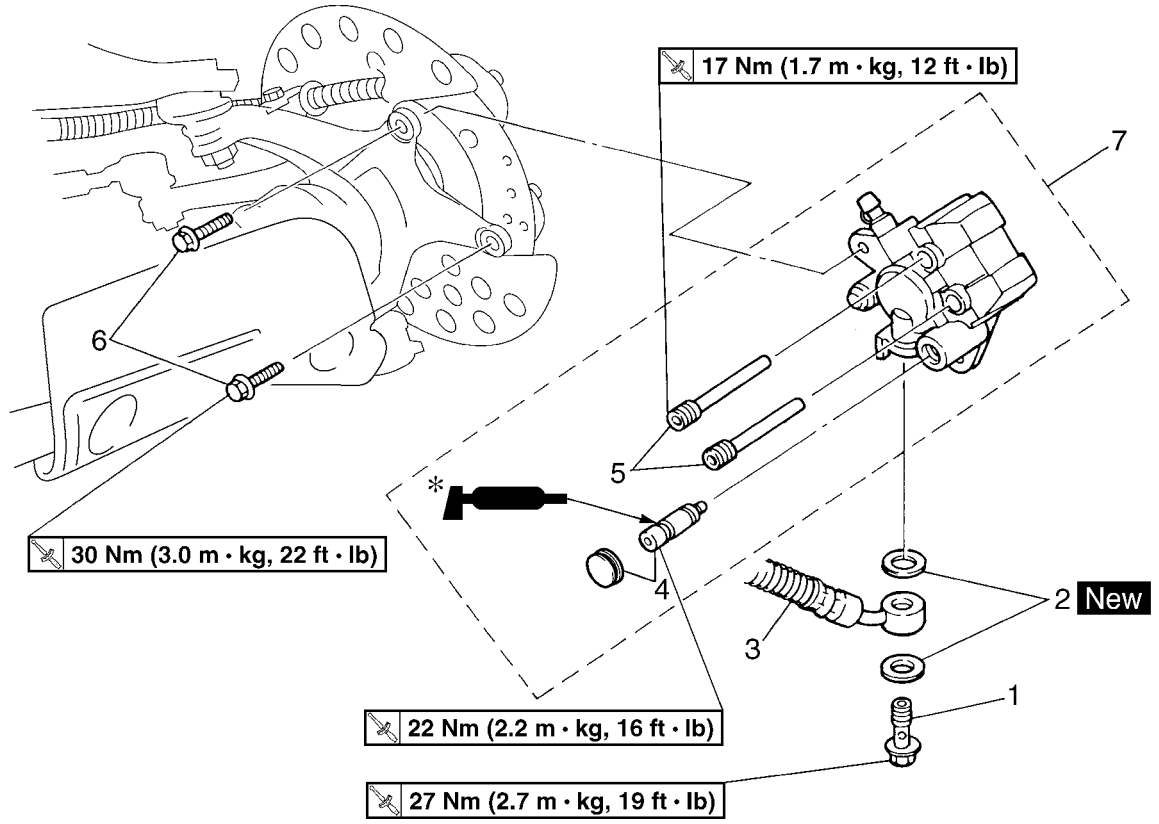


* Apply silicone grease.

| Order | Job/Part | Q'ty | Remarks |
|---|---|---|---|
| | **Removing the front brake calipers** | | Remove the parts in the order listed. The following procedure applies to both of the front brake calipers. |
| | Brake fluid | | Drain. |
| | Front wheel | | Refer to "FRONT AND REAR WHEELS". |
| 1 | Union bolt | 1 | |
| 2 | Copper washer | 2 | |
| 3 | Brake hose | 1 | Disconnect. Refer to "INSTALLING THE FRONT BRAKE CALIPERS". |
| 4 | Cap/retaining bolt | 1/1 | Loosen. |
| 5 | Brake pad holding bolt | 2 | Loosen. |
| 6 | Brake caliper mounting bolt | 2 | |
| 7 | Brake caliper assembly | 1 | |
| | | | For installation, reverse the removal procedure. |

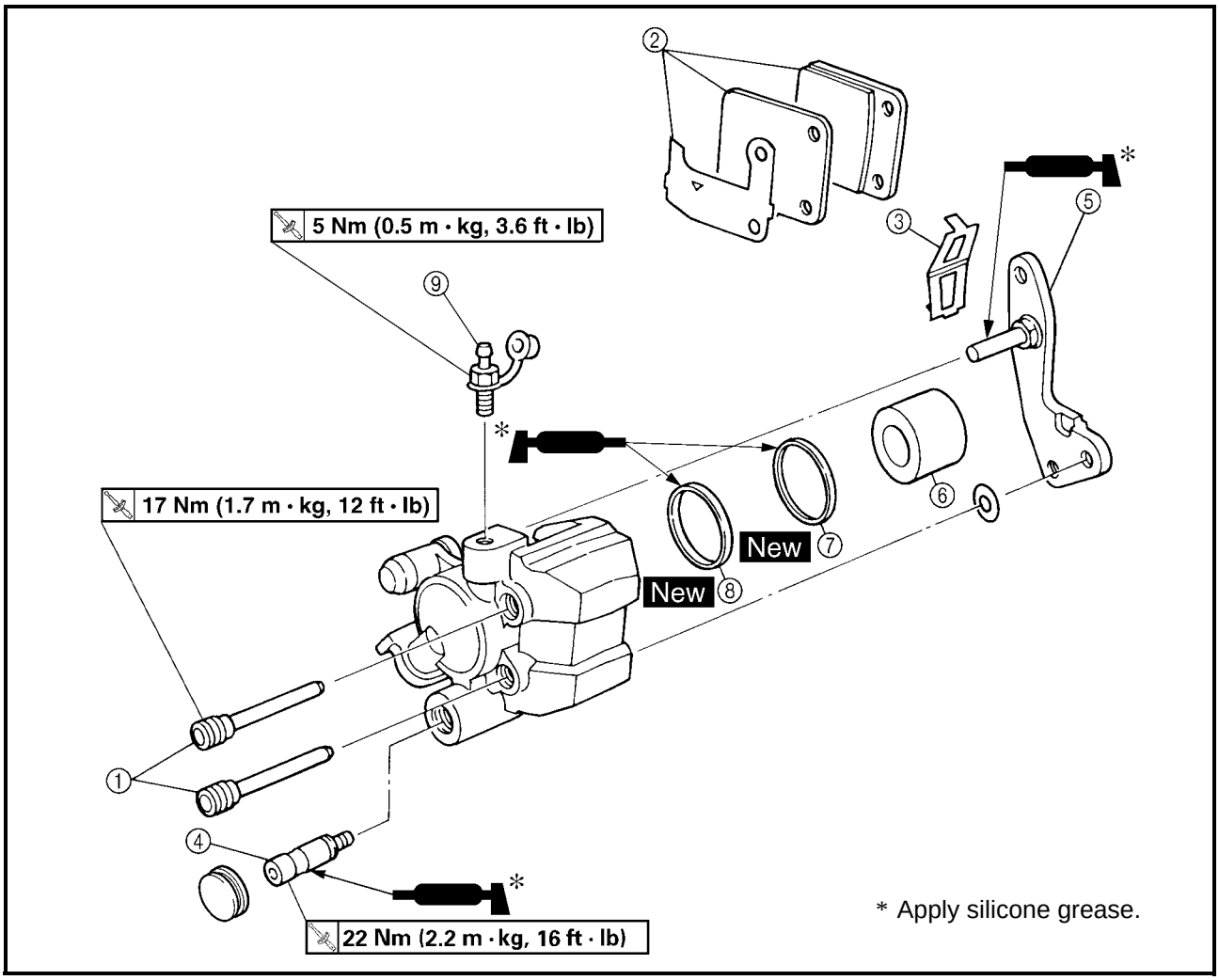


| Order | Job/Part | Q'ty | Remarks |
|---|---|---|---|
| | **Disassembling the front brake calipers** | | Remove the parts in the order listed. The following procedure applies to both of the front brake calipers. |
| ① | Brake pad holding bolt | 2 | |
| ② | Brake pad/brake pad shim | 2/1 | |
| ③ | Brake pad spring | 1 | |
| ④ | Retaining bolt | 1 | |
| ⑤ | Caliper bracket | 1 | |
| ⑥ | Brake caliper piston | 1 | Refer to "DISASSEMBLING THE FRONT BRAKE CALIPERS" and "ASSEMBLING THE FRONT BRAKE CALIPERS". |
| ⑦ | Dust seal | 1 | |
| ⑧ | Caliper piston seal | 1 | |
| ⑨ | Bleed screw | 1 | |
| | | | For assembly, reverse the disassembly procedure. |

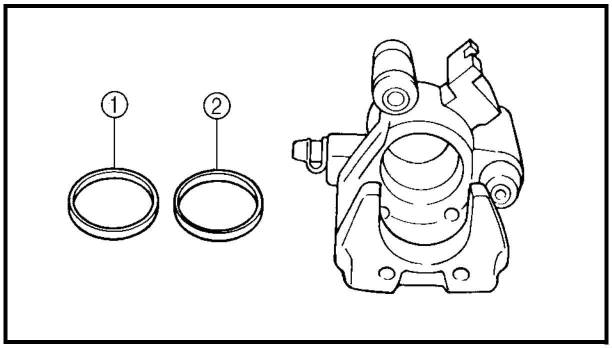


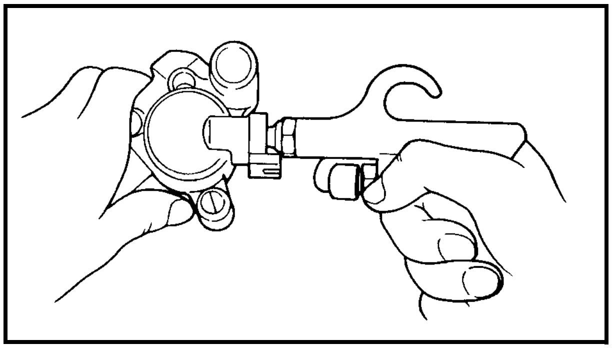

## DISASSEMBLING THE FRONT BRAKE CALIPERS

1. Remove:
   - brake caliper piston
   - dust seal ①
   - caliper piston seal ②

▼▼▼▼▼▼▼▼▼▼▼▼▼▼▼▼▼▼▼▼▼▼▼▼▼▼▼▼▼▼▼▼▼▼▼

a. Blow compressed air into the hose joint opening to force out the caliper piston from the brake caliper body.

**⚠ WARNING**

- **Never try to pry out the caliper piston.**
- **Cover the caliper piston with a rag. Be careful not to get injured when the piston is expelled from the master cylinder.**

b. Remove the dust seal and caliper piston seal.

▲▲▲▲▲▲▲▲▲▲▲▲▲▲▲▲▲▲▲▲▲▲▲▲▲▲▲▲▲▲▲▲▲▲▲

EB702040

## CHECKING THE FRONT BRAKE CALIPERS

| **Recommended brake component replacement schedule:** | |
|---|---|
| **Brake pads** | **As required** |
| **Piston seal, dust seal** | **Every two years** |
| **Brake hoses** | **Every four years** |
| **Brake fluid** | **Replace when brakes are disassembled.** |

**⚠ WARNING**

**All internal brake components should be cleaned in new brake fluid only. Do not use solvents as they will cause seals to swell and distort.**

1. Check:
   - brake caliper piston
     Scratches/rust/wear → Replace the brake caliper assembly.
   - brake caliper cylinder
     Wear/scratches → Replace the brake caliper assembly.
   - brake caliper body
     Cracks/damage → Replace.
   - brake fluid delivery passage (brake caliper body)
     Blockage → Blow out with compressed air.

**WARNING**

**Replace the caliper piston seal and dust seal whenever the brake caliper is disassembled.**

### ASSEMBLING THE FRONT BRAKE CALIPERS

**WARNING**

- **All internal brake components should be cleaned and lubricated with new brake fluid only before installation.**

**Recommended brake fluid**
**DOT 4**

- **Replace the caliper piston seal and the dust seal whenever a brake caliper is disassembled.**

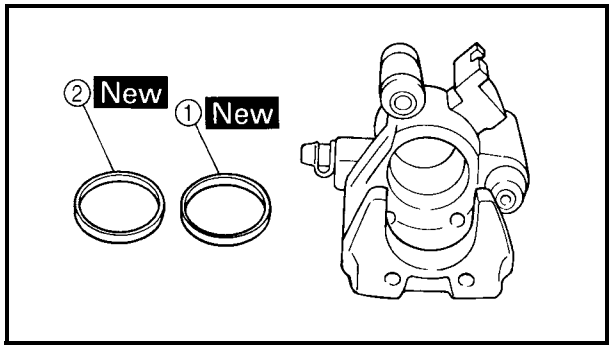


1. Install:
   - caliper piston seal ① New
   - dust seal ② New

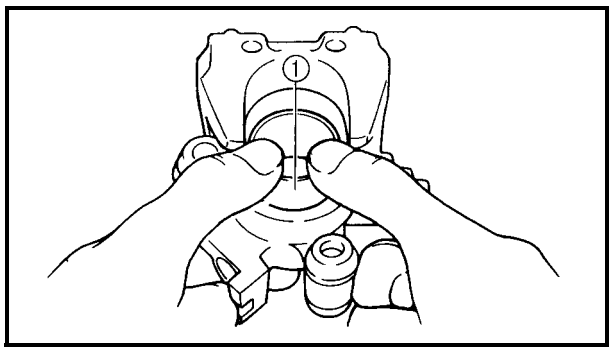


2. Install:
   - brake caliper piston ①

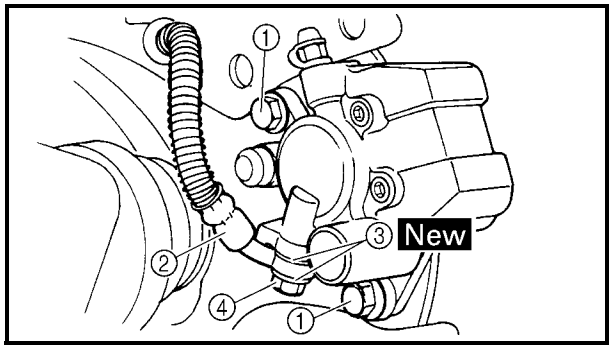


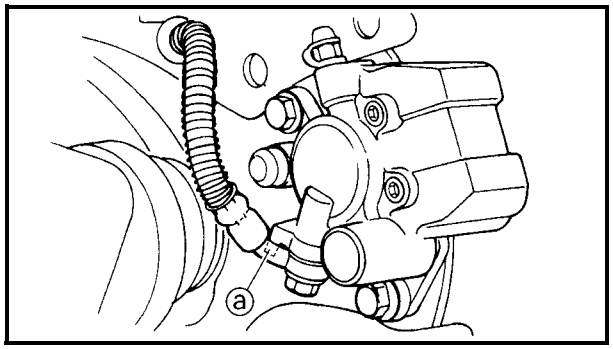


**INSTALLING THE FRONT BRAKE CALIPERS**

1. Install:
   - brake caliper assembly
   - brake caliper mounting bolts ①
     **30 Nm (3.0 m · kg, 22 ft · lb)**
   - brake hose ②
   - copper washers ③ New
   - union bolt ④ **27 Nm (2.7 m · kg, 19 ft · lb)**

**CAUTION:**

**When installing the brake hose on the brake caliper, make sure that the brake pipe touches the projection ⓐ on the brake caliper.**

**WARNING**

**Proper brake hose routing is essential to insure safe vehicle operation. Refer to "CABLE ROUTING" in chapter 2.**

2. Fill:
   - brake reservoir

**Recommended brake fluid**
**DOT 4**

**CAUTION:**

**Brake fluid may damage painted surfaces or plastic parts. Always clean up spilled brake fluid immediately.**

**WARNING**

- **Use only the designated quality brake fluid: other brake fluids may deteriorate the rubber seals, causing leakage and poor brake performance.**
- **Refill with the same type of brake fluid: mixing brake fluids may result in a harmful chemical reaction and lead to poor brake performance.**
- **Be careful that water does not enter the master cylinder when refilling. Water will significantly lower the boiling point of the brake fluid and may result in vapor lock.**

3. Air bleed
   - brake system
     Refer to “BLEEDING THE HYDRAULIC BRAKE SYSTEM” in chapter 3.
4. Check:
   - brake fluid level
     Brake fluid level is under the “LOWER” level line → Fill up.
     Refer to “CHECKING THE BRAKE FLUID LEVEL” in chapter 3.

# REAR BRAKE

## REAR BRAKE LEVER

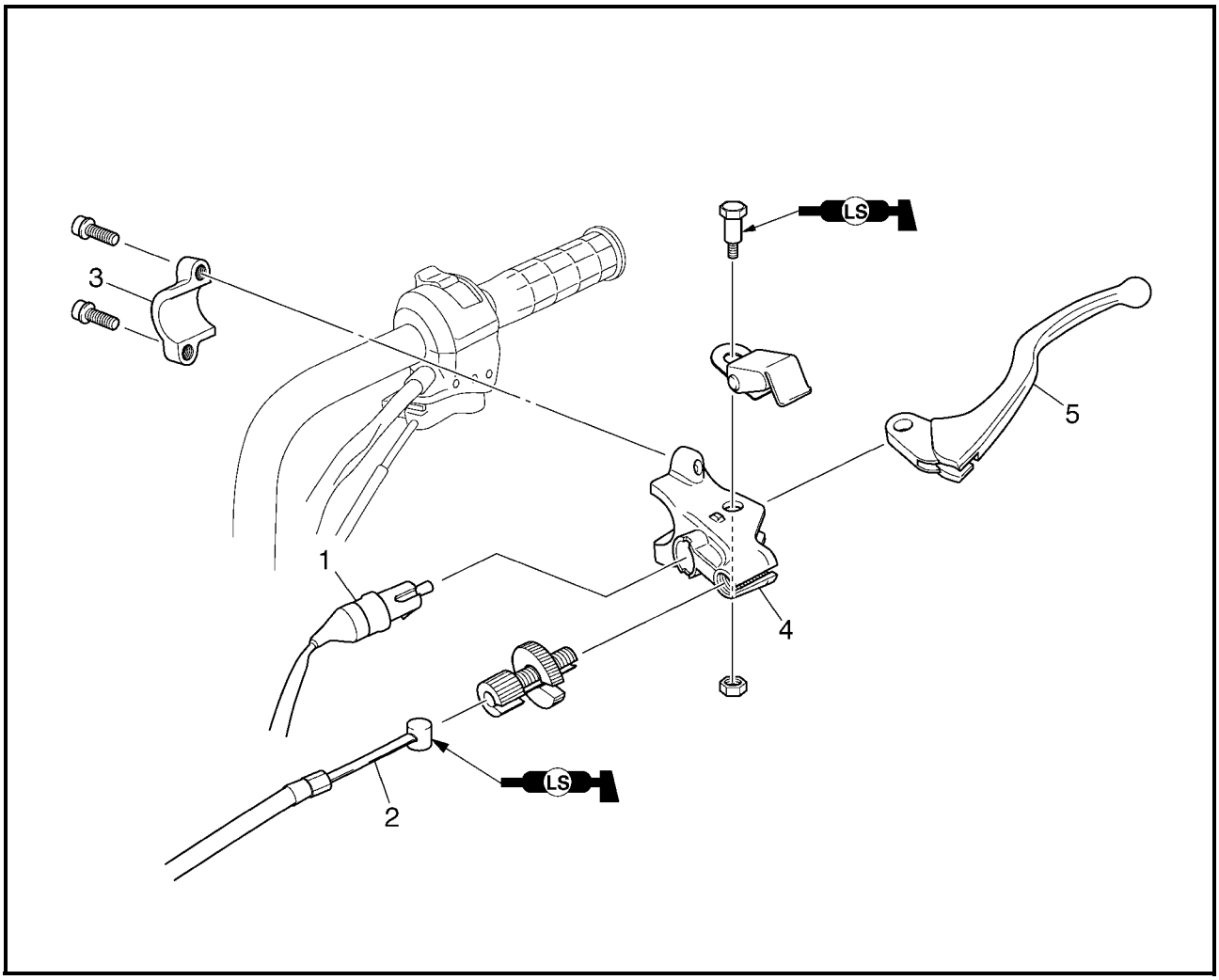


| Order | Job/Part | Q'ty | Remarks |
|---|---|---|---|
| | **Removing the rear brake lever** | | Remove the parts in the order listed. |
| 1 | Rear brake lever light switch | 1 | |
| 2 | Rear brake lever cable | 1 | |
| 3 | Rear brake lever holder bracket | 1 | Refer to "STEERING SYSTEM". |
| 4 | Rear brake lever holder | 1 | |
| 5 | Rear brake lever | 1 | |
| | | | For installation, reverse the removal procedure. |

## BRAKE PEDAL

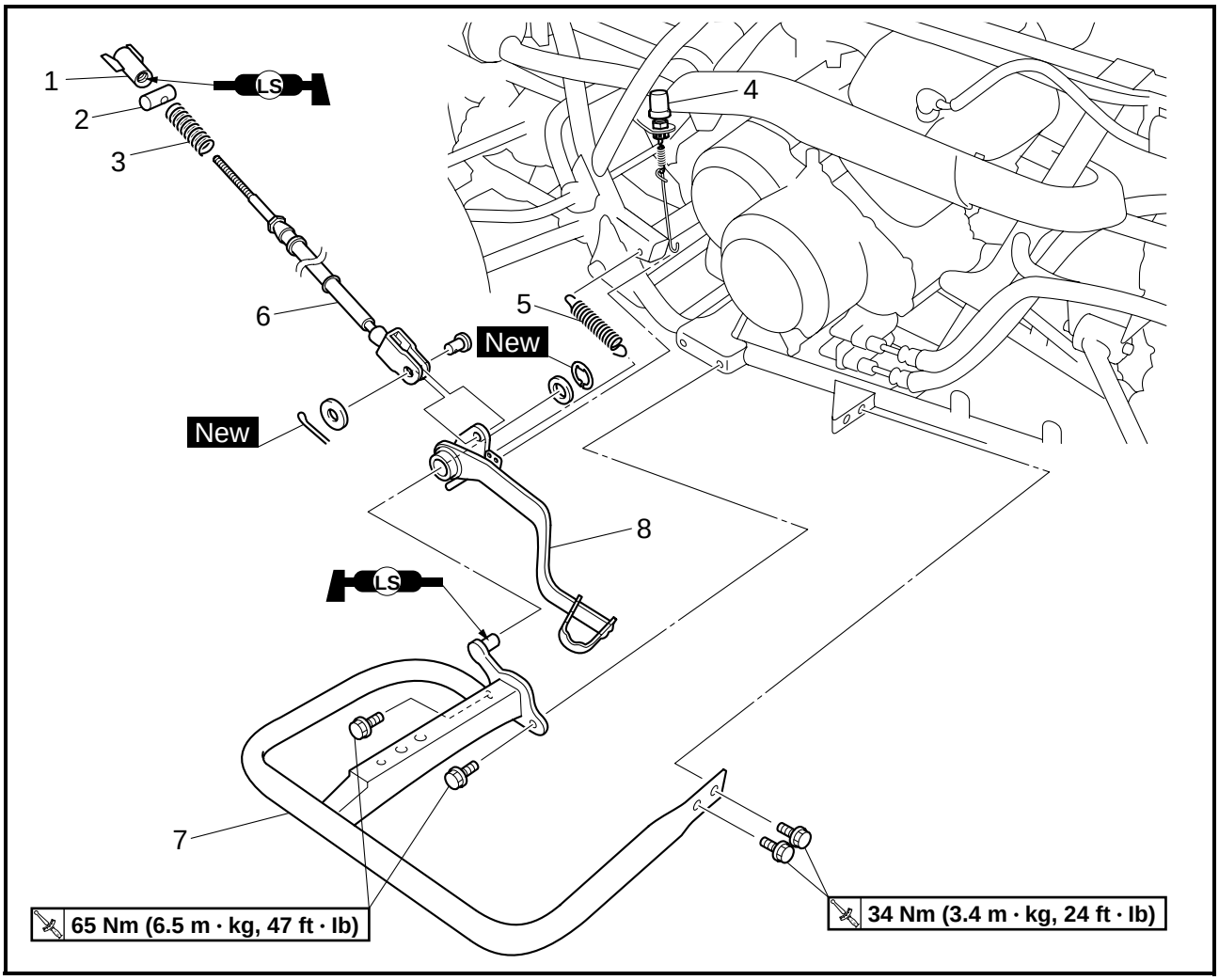


| Order | Job/Part | Q'ty | Remarks |
|---|---|---|---|
| | **Removing the brake pedal** | | Remove the parts in the order listed. |
| | Right footrest board | | Refer to "FOOTREST BOARDS" in chapter 3. |
| 1 | Brake pedal adjusting nut | 1 | |
| 2 | Pin | 1 | |
| 3 | Spring | 1 | |
| 4 | Brake pedal light switch | 1 | Unhook. |
| 5 | Spring | 1 | |
| 6 | Brake pedal cable | 1 | |
| 7 | Footrest board bracket | 1 | |
| 8 | Brake pedal | 1 | |
| | | | For installation, reverse the removal procedure. |

## FINAL GEAR CASE (REAR BRAKE)

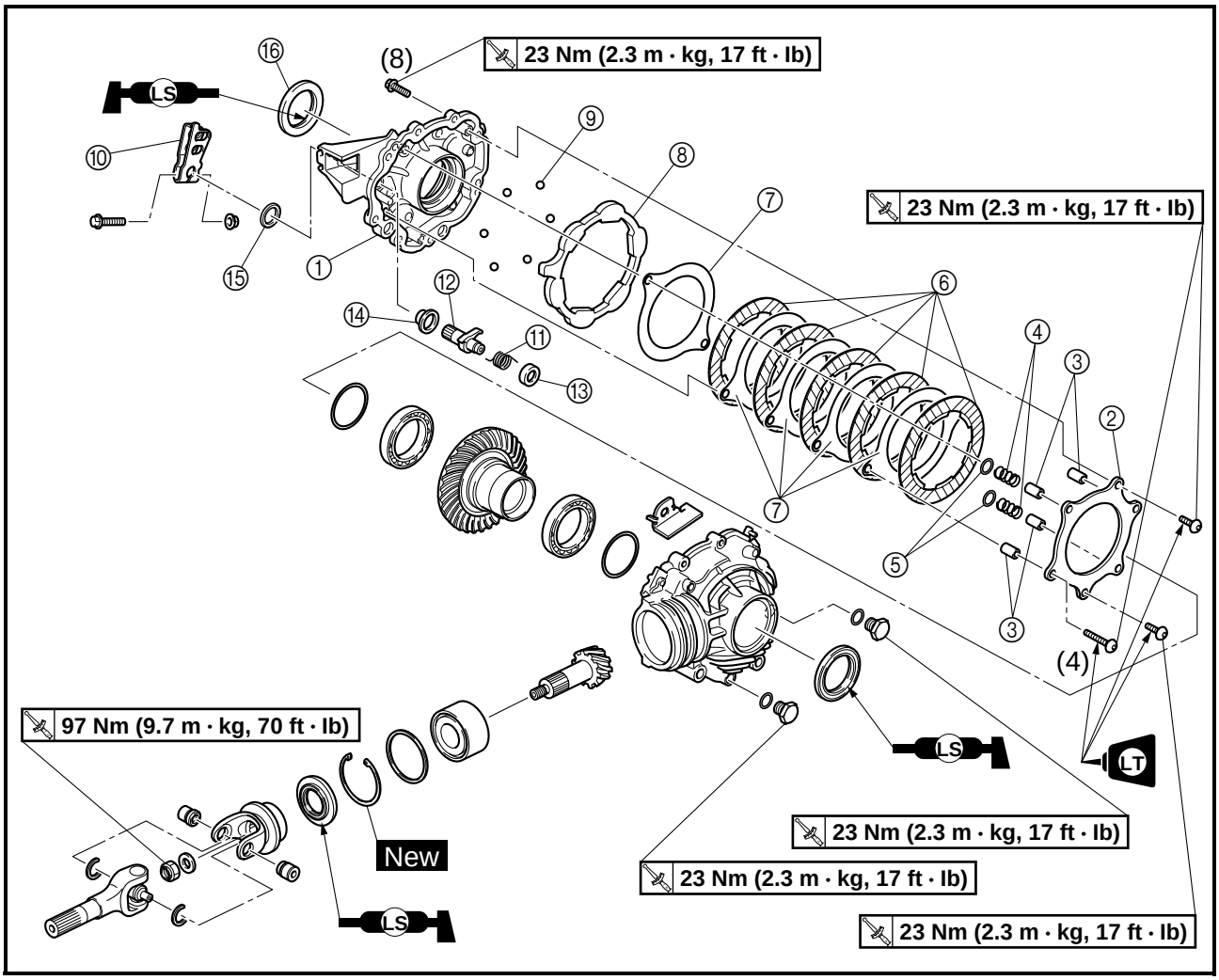


| Order | Job/Part | Q'ty | Remarks |
|---|---|---|---|
| | **Disassembling the final gear case (rear brake)** | | Remove the parts in the order listed. |
| | Final gear case assembly | | Refer to "REAR CONSTANT VELOCITY JOINTS AND FINAL DRIVE GEAR" in chapter 6. |
| ① | Final gear case (right side) | 1 | **NOTE:** Working in a crisscross pattern, loosen each bolt 1/4 of a turn. After all the bolts are loosened, remove them. |
| ② | Pressure plate | 1 | |
| ③ | Spacer | 4 | |
| ④ | Rear brake spring | 2 | |
| ⑤ | Washer | 2 | |
| ⑥ | Friction plate | 5 | |

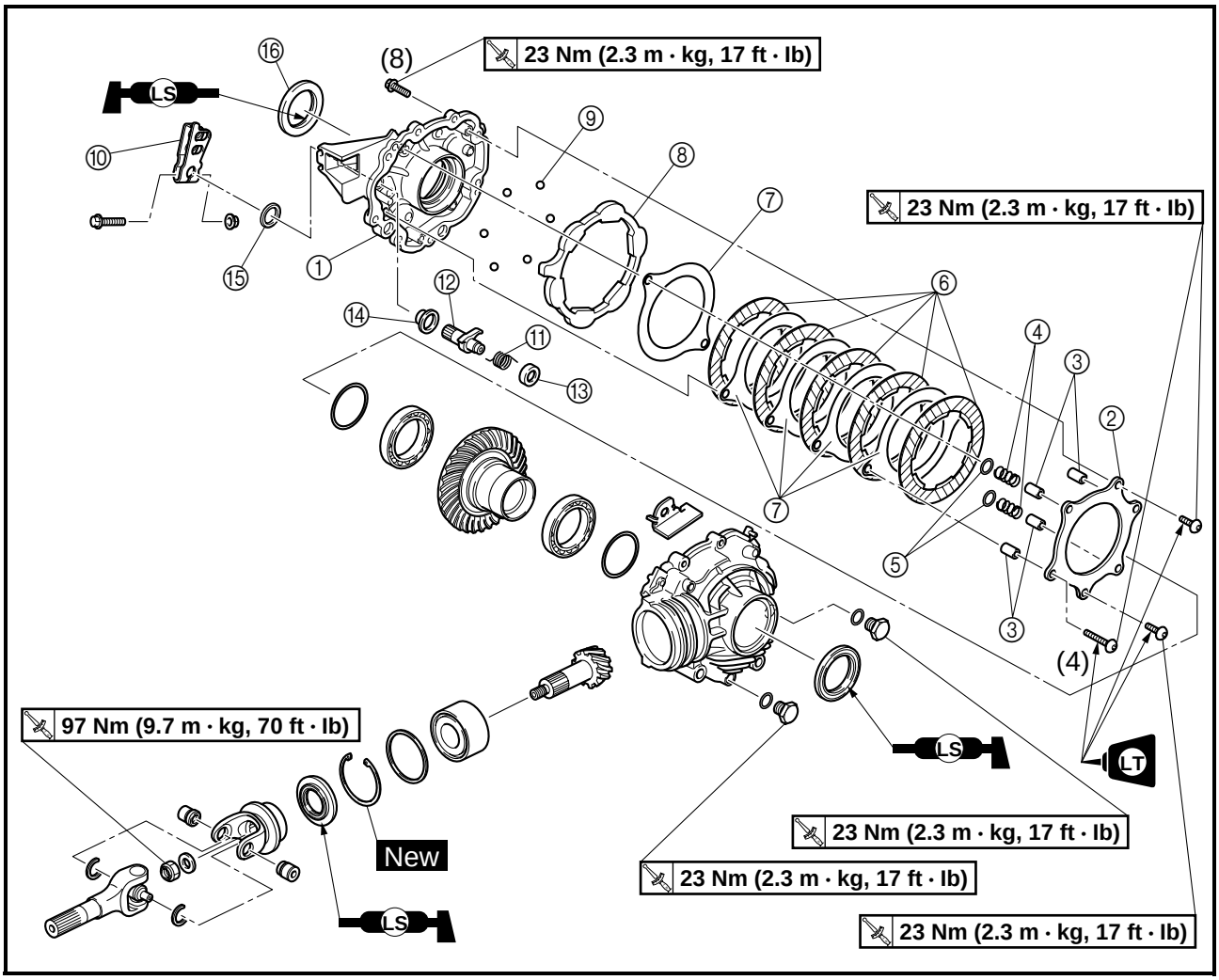


| Order | Job/Part | Q'ty | Remarks |
|---|---|---|---|
| ⑦ | Rear brake plate | 5 | |
| ⑧ | Rear brake cam plate | 1 | |
| ⑨ | Rear brake cam ball | 6 | |
| ⑩ | Rear brake camshaft lever | 1 | |
| ⑪ | Rear brake camshaft spring | 1 | |
| ⑫ | Rear brake camshaft | 1 | |
| ⑬ | Bearing | 1 | |
| ⑭ | Bearing | 1 | |
| ⑮ | Oil seal | 1 | |
| ⑯ | Oil seal | 1 | |
| | | | For assembly, reverse the disassembly procedure. |

EBS00300

### CHECKING THE FRICTION PLATES

The following procedure applies to all of the friction plates.

1. Check:
   - friction plate
     Damage/wear → Replace the friction plates as a set.

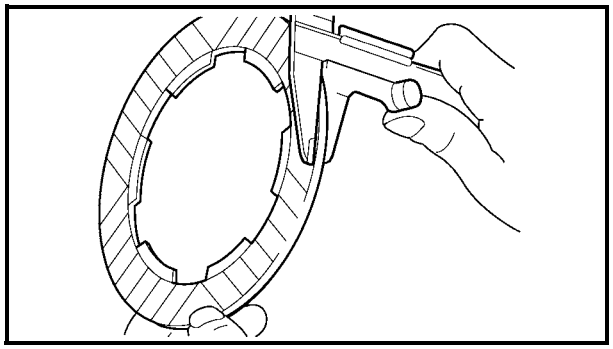

2. Measure:
   - friction plate thickness
     Out of specification → Replace the friction plates as a set.

**NOTE:**

Measure the friction plate at four places.

**Friction plate thickness**
**2.37 ~ 2.53 mm**
**(0.0933 ~ 0.0996 in)**
**<Limit>: 2.22 mm (0.0874 in)**

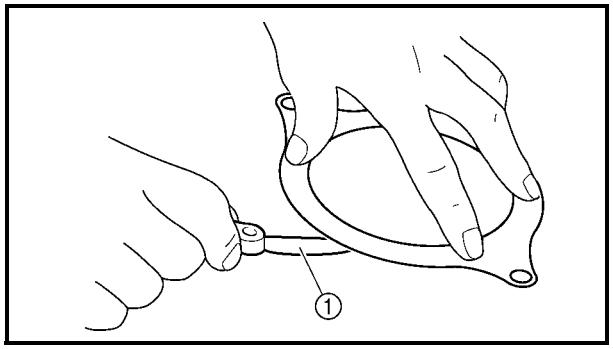


EBS00301

### CHECKING THE REAR BRAKE PLATES

The following procedure applies to all of the rear brake plates.

1. Check:
   - rear brake plate
     Damage → Replace the rear brake plates as a set.
2. Measure:
   - rear brake plate warpage
     (with a surface plate and thickness gauge ①)
     Out of specification → Replace the rear brake plates as a set.

**Maximum rear brake plate warpage**
**0.2 mm (0.0079 in)**

EBS00302

### CHECKING THE REAR BRAKE SPRINGS

The following procedure applies to all of the rear brake springs.

1. Check:
   - rear brake spring
     Damage → Replace the rear brake springs as a set.

EBS00305

### CHECKING THE PRESSURE PLATE

1. Check:
   - pressure plate
     Cracks/damage → Replace.

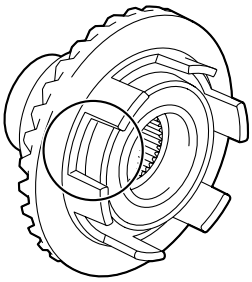

### CHECKING THE RING GEAR

1. Check:
   - ring gear dogs
     Damage/pitting/wear → Deburr the ring gear dogs or replace the ring gear.

**NOTE:**

Pitting on the ring gear dogs will cause erratic brake operation.

# STEERING SYSTEM

## HANDLEBAR

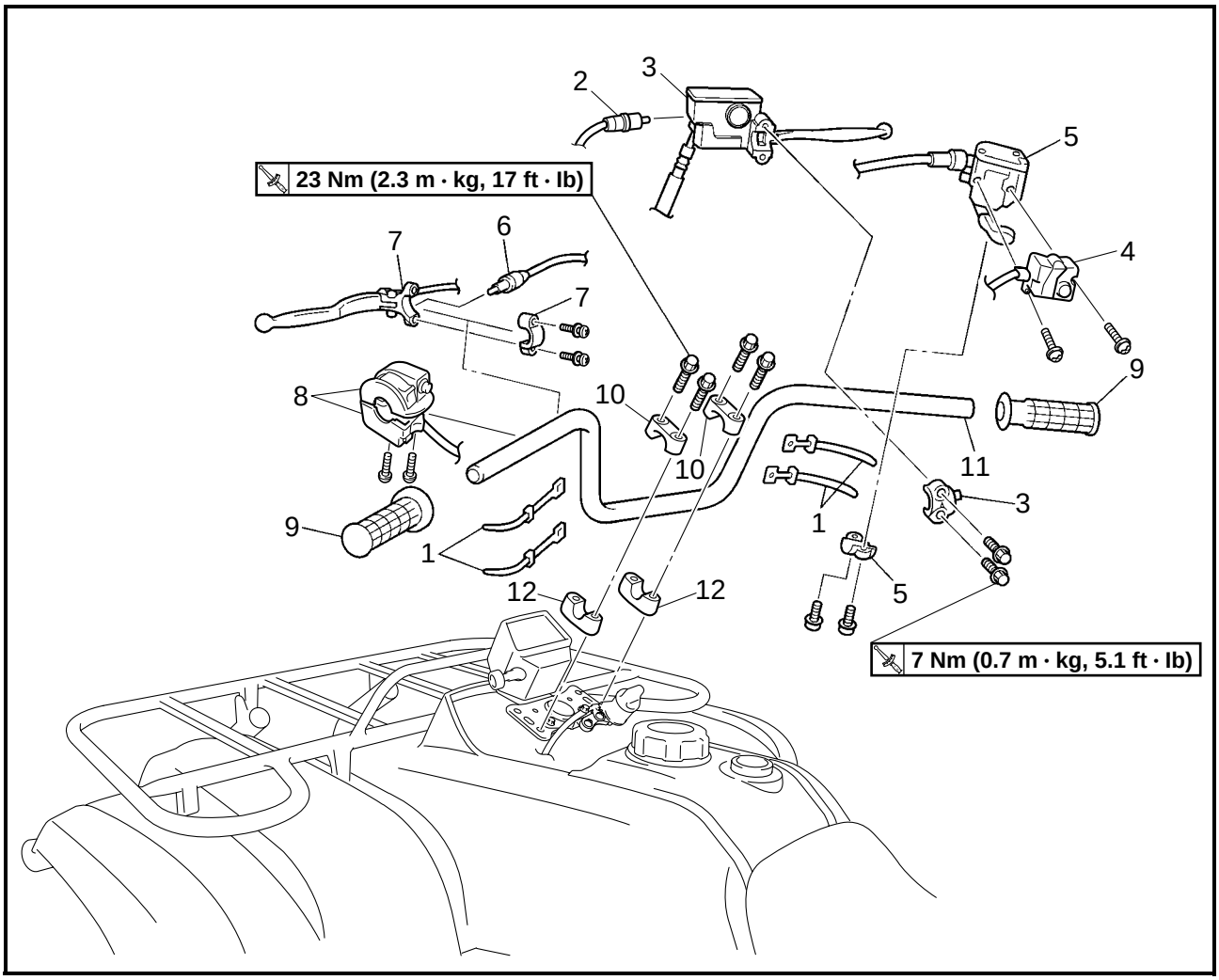


| Order | Job/Part | Q'ty | Remarks |
|---|---|---|---|
| | **Removing the handlebar** | | Remove the parts in the order listed. |
| | Handlebar cover | | Refer to "SEAT, CARRIERS, FENDERS, FUEL TANK AND AIR FILTER" in chapter 3. |
| 1 | Plastic band | 4 | |
| 2 | Front brake light switch | 1 | |
| 3 | Brake master cylinder assembly/holder | 1/1 | Refer to "INSTALLING THE BRAKE MASTER CYLINDER ASSEMBLY". |
| 4 | On-command four-wheel-drive switch and differential gear lock switch | 1 | |
| 5 | Throttle lever assembly/holder | 1/1 | |
| 6 | Rear brake lever light switch | 1 | Refer to "REMOVING THE FRONT BRAKE LIGHT SWITCH AND REAR BRAKE LEVER LIGHT SWITCH". |
| 7 | Rear brake lever/holder | 1/1 | Refer to "INSTALLING THE REAR BRAKE LEVER". |
| 8 | Left handlebar switch | 1 | |

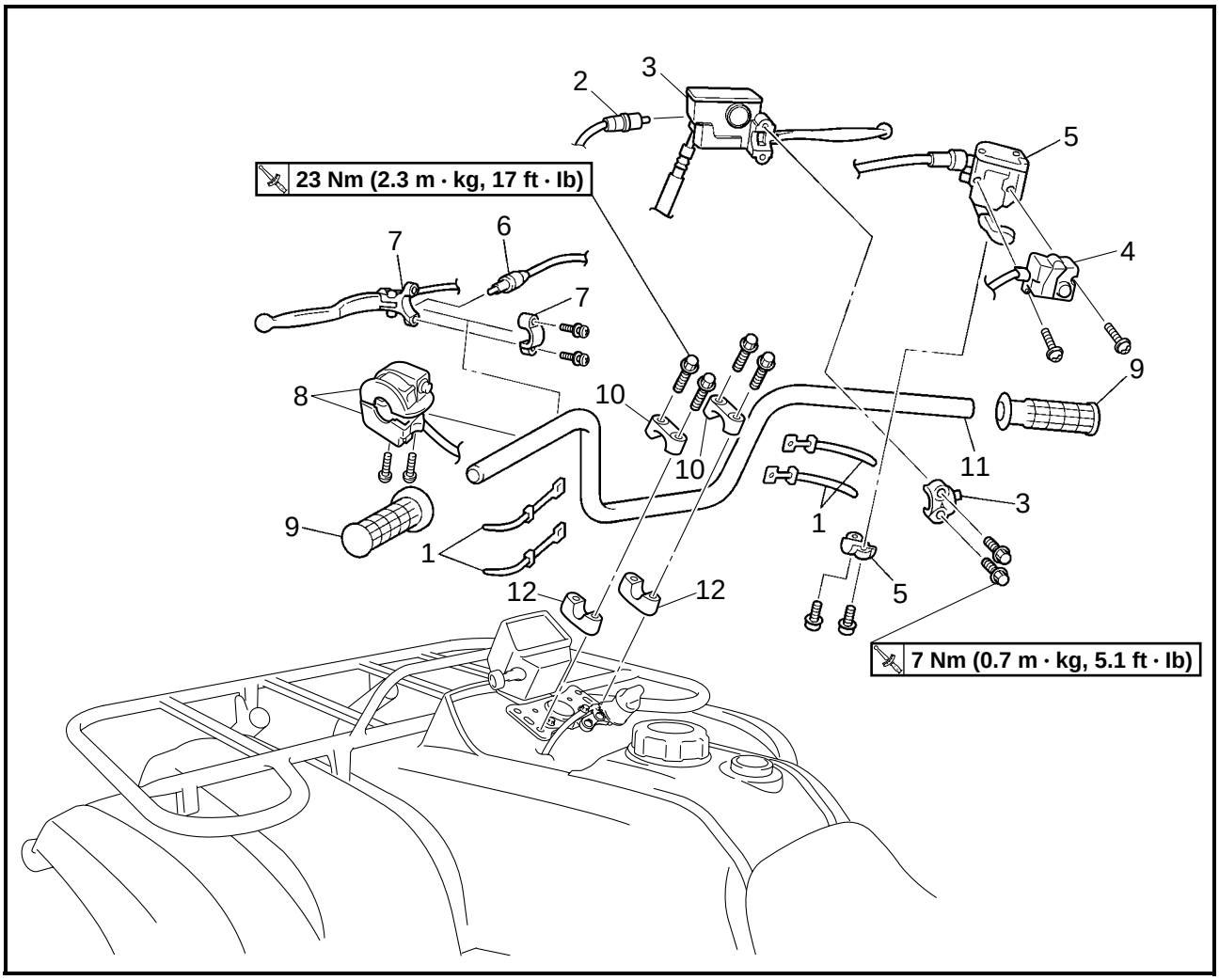


| Order | Job/Part | Q'ty | Remarks |
|---|---|---|---|
| 9 | Handlebar grip | 2 | |
| 10 | Upper handlebar holder | 2 | Refer to "INSTALLING THE HANDLEBAR". |
| 11 | Handlebar | 1 | |
| 12 | Lower handlebar holder | 2 | |
| | | | For installation, reverse the removal procedure. |

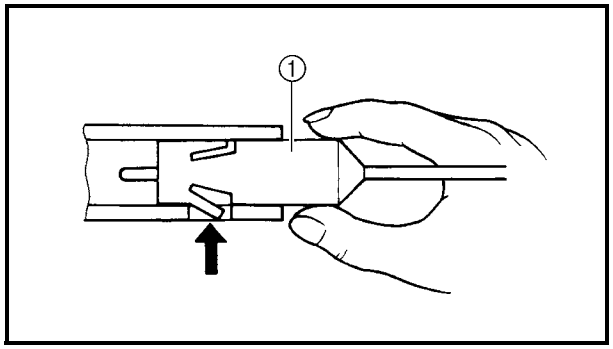


### REMOVING THE FRONT BRAKE LIGHT SWITCH AND REAR BRAKE LEVER LIGHT SWITCH

1. Remove:
   - brake light switch ①

**NOTE:**

Push the fastener when removing the brake light switch out of the brake lever holder.

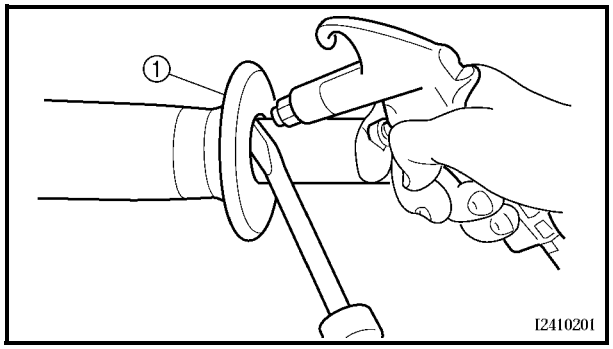


EBS00447

### REMOVING THE HANDLEBAR GRIPS

1. Remove:
   - handlebar grips ①

**NOTE:**

Blow compressed air between the handlebar and handlebar grip, and gradually push the grip off the handlebar.

### CHECKING THE HANDLEBAR

1. Check:
   - handlebar
     Bends/cracks/damage → Replace.

**WARNING**

**Do not attempt to straighten a bent handlebar as this may dangerously weaken the handlebar.**

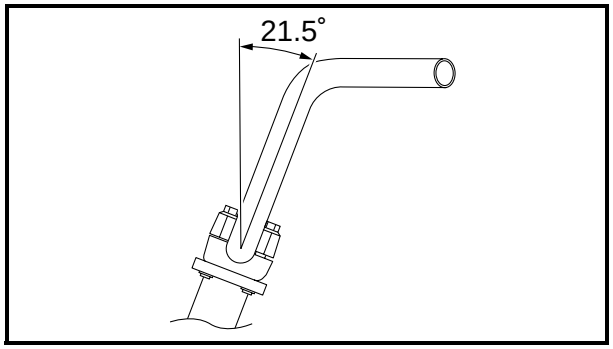


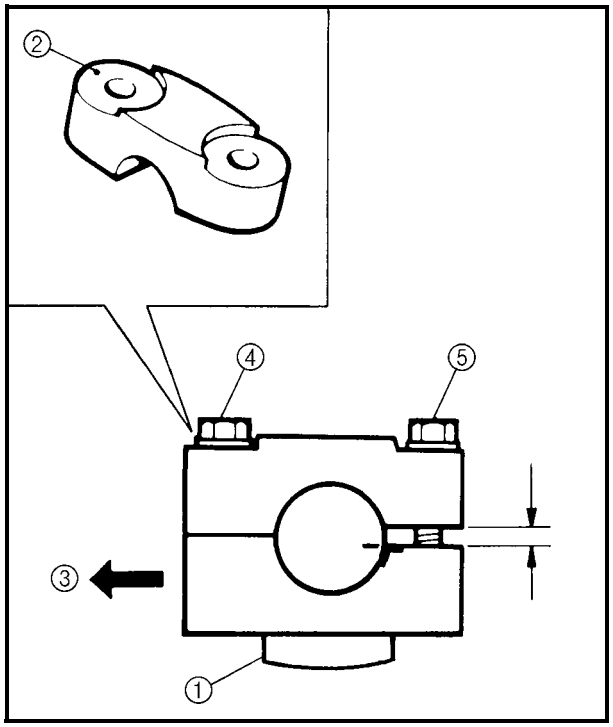


### INSTALLING THE HANDLEBAR

1. Install:
   - handlebar
   - handlebar holders (upper and lower)

**23 Nm (2.3 m · kg, 17 ft · lb)**

**NOTE:**

- Install the handlebar within 21.5° from the vertical line shown in the illustration.
- Insert the projection ① of the lower handlebar holders into the steering shaft hole.
- The upper handlebar holders should be installed with the punched mark ② forward ③.

**CAUTION:**

**First tighten the bolts ④ on the front side of the handlebar holders, and then tighten the bolts ⑤ on the rear side.**

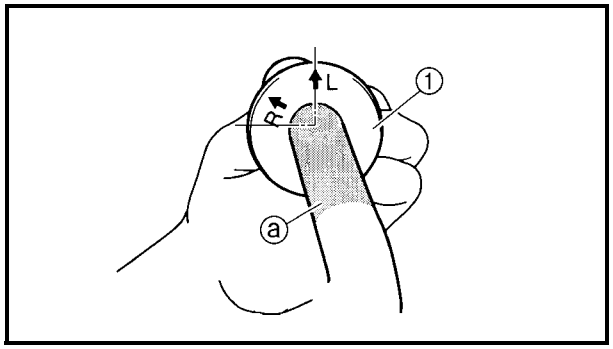


EBS00450

### INSTALLING THE HANDLEBAR GRIPS

1. Install:
   - handlebar grips ①

**NOTE:**

- Before applying the adhesive, wipe off grease or oil on the handlebar surface ⓐ with a lacquer thinner.
- Install the handlebar grips to the handlebar so that the appropriate arrow mark faces straight upward.

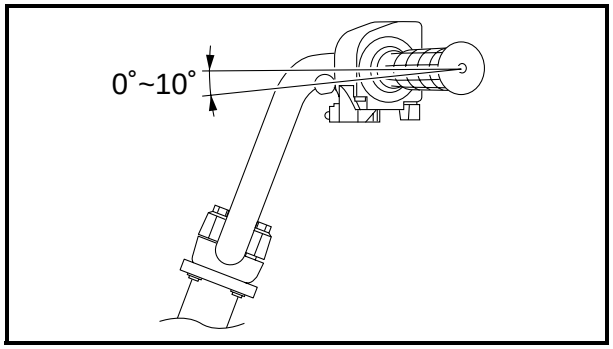


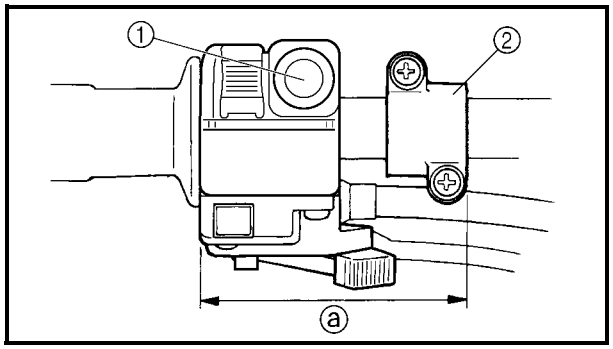


### INSTALLING THE REAR BRAKE LEVER

1. Install:
   - left handlebar switch ①
   - rear brake lever
   - rear brake lever holder ②

**NOTE:**
- Install the rear brake lever holder as shown.
- First tighten the upper screw, then the lower screw.
- Install the brake lever within 0 ~ 10° from the horizontal line shown in the illustration.

ⓐ 80 mm (3.15 in)

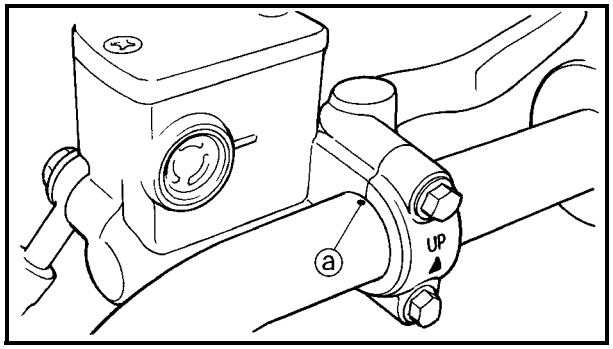


### INSTALLING THE BRAKE MASTER CYLINDER ASSEMBLY

1. Install:
   - brake master cylinder assembly
   - brake master cylinder assembly holder

| | |
|---|---|
| | **7 Nm (0.7 m · kg, 5.1 ft · lb)** |

**NOTE:**
- Align the end of the brake master cylinder holder with the punch mark ⓐ in the handlebar.
- The “UP” mark on the master cylinder holder should face up.
- Tighten first the upper bolt, then the lower bolt.

## STEERING STEM

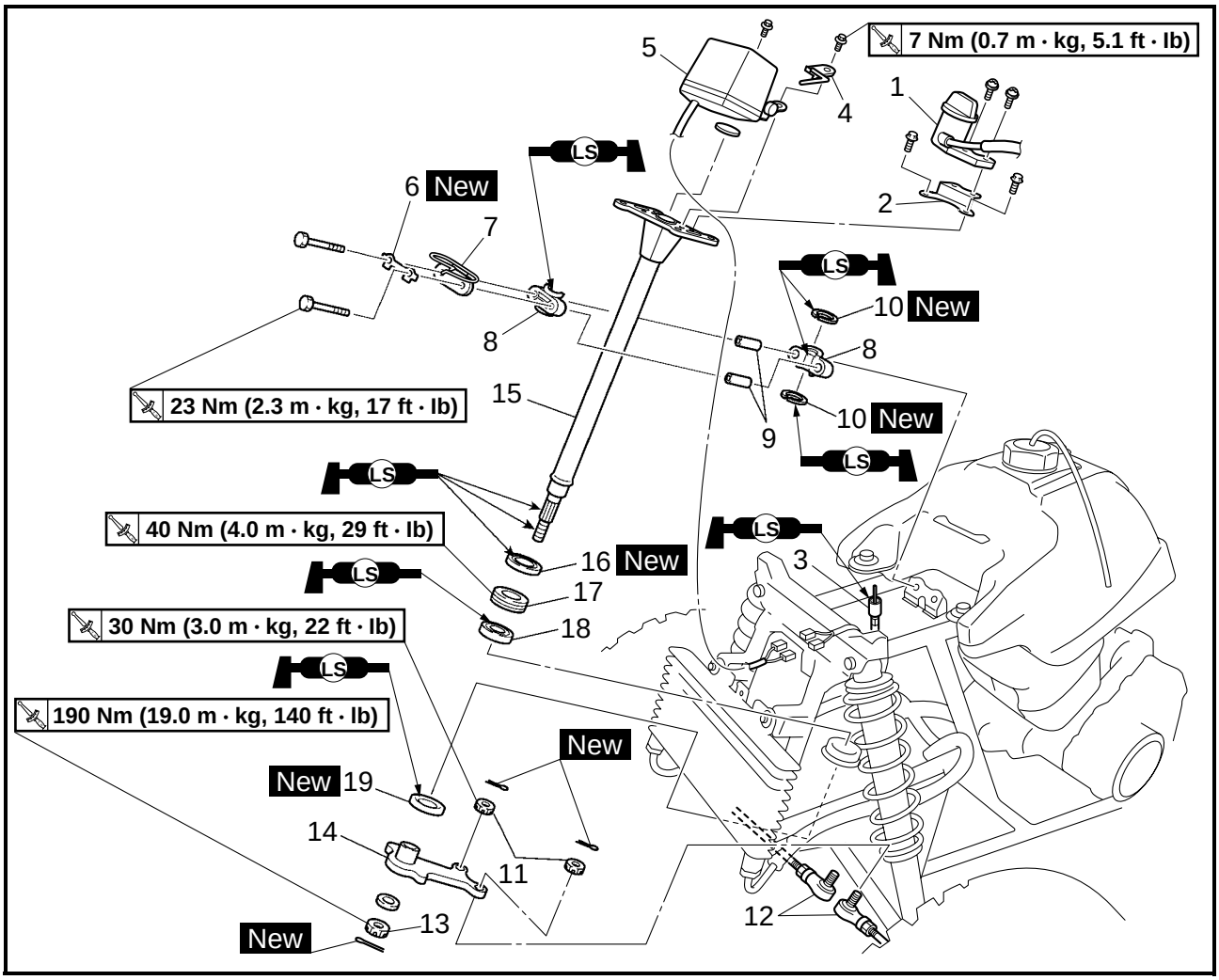


| Order | Job/Part | Q'ty | Remarks |
|---|---|---|---|
| | **Removing the steering stem** | | Remove the parts in the order listed. |
| | Handlebar | | Refer to "HANDLEBAR". |
| | Seat<br>Front fender | | Refer to "SEAT, CARRIERS, FENDERS, FUEL TANK AND AIR FILTER" in chapter 3. |
| 1 | Reverse knob | 1 | |
| 2 | Reverse knob bracket | 1 | |
| 3 | Speedometer cable | 1 | Disconnect. |
| 4 | Cable guide | 1 | |
| 5 | Speedometer assembly | 1 | |
| 6 | Lock washer | 1 | Refer to "INSTALLING THE CABLE GUIDE". |
| 7 | Cable guide | 1 | |
| 8 | Steering stem bushing | 2 | |
| 9 | Collar | 2 | |
| 10 | Oil seal | 2 | |

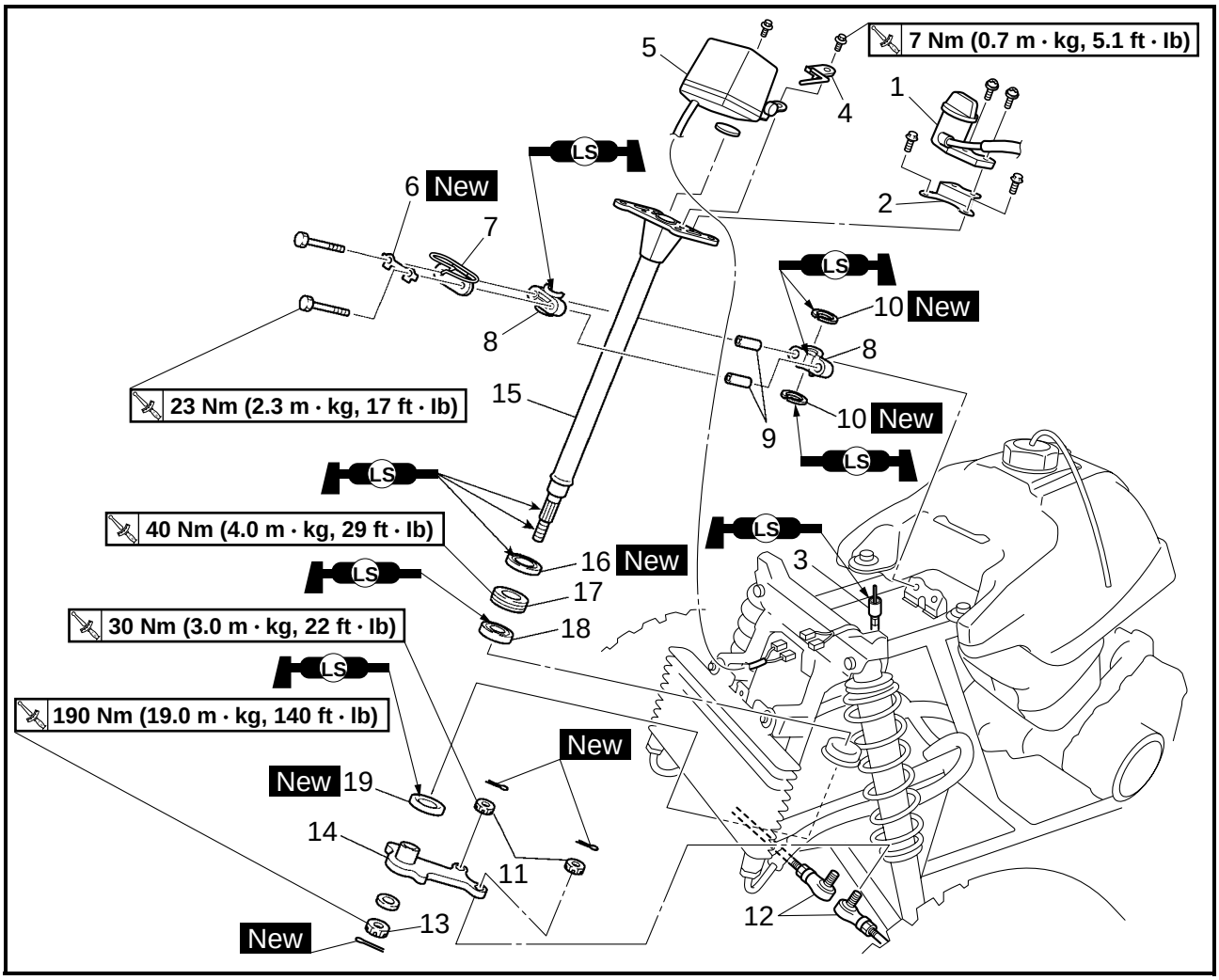


| Order | Job/Part | Q'ty | Remarks |
|---|---|---|---|
| 11 | Tie rod end nut | 2 | |
| 12 | Tie rod | 2 | Disconnect. |
| 13 | Steering stem nut | 1 | |
| 14 | Pitman arm | 1 | |
| 15 | Steering stem | 1 | |
| 16 | Oil seal | 1 | |
| 17 | Bearing retainer | 1 | Refer to "REMOVING THE BEARING RETAINER" and "INSTALLING THE BEARING RETAINER". |
| 18 | Bearing | 1 | |
| 19 | Oil seal | 1 | |
| | | | For installation, reverse the removal procedure. |

### REMOVING THE BEARING RETAINER

1. Remove:
   - bearing retainer (steering stem)

| | |
|---|---|
| | **Damper rod holder (30 mm)**<br>**90890-01327, YM-01327** |

### CHECKING THE STEERING STEM

1. Check:
   - steering stem
     Bends → Replace.

**WARNING**

**Do not attempt to straighten a bent stem; this may dangerously weaken the stem.**

2. Check:
   - oil seals
   - steering stem bushings
     Wear/damage → Replace.

### INSTALLING THE BEARING RETAINER

1. Install:
   - bearing retainer (steering stem) **40 Nm (4.0 m · kg, 29 ft · lb)**

| | |
|---|---|
| | **Damper rod holder (30 mm)**<br>**90890-01327, YM-01327** |

### INSTALLING THE CABLE GUIDE

1. Install:
   - cable guide
   - lock washer New
   - bolts **23 Nm (2.3 m · kg, 17 ft · lb)**
2. Bend the lock washer tabs along a flat side of the bolts.

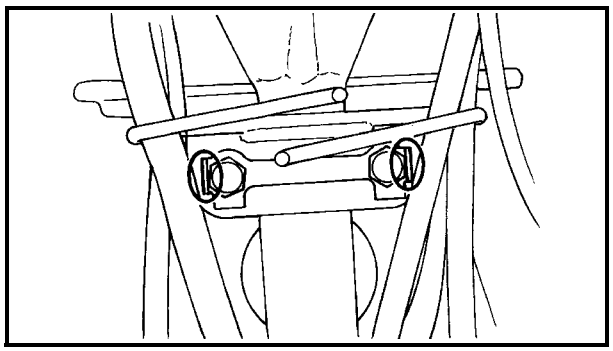

**NOTE:**

Pass the cables and hoses through the cable guide. Refer to “CABLE ROUTING” in chapter 2.

## TIE RODS AND STEERING KNUCKLES

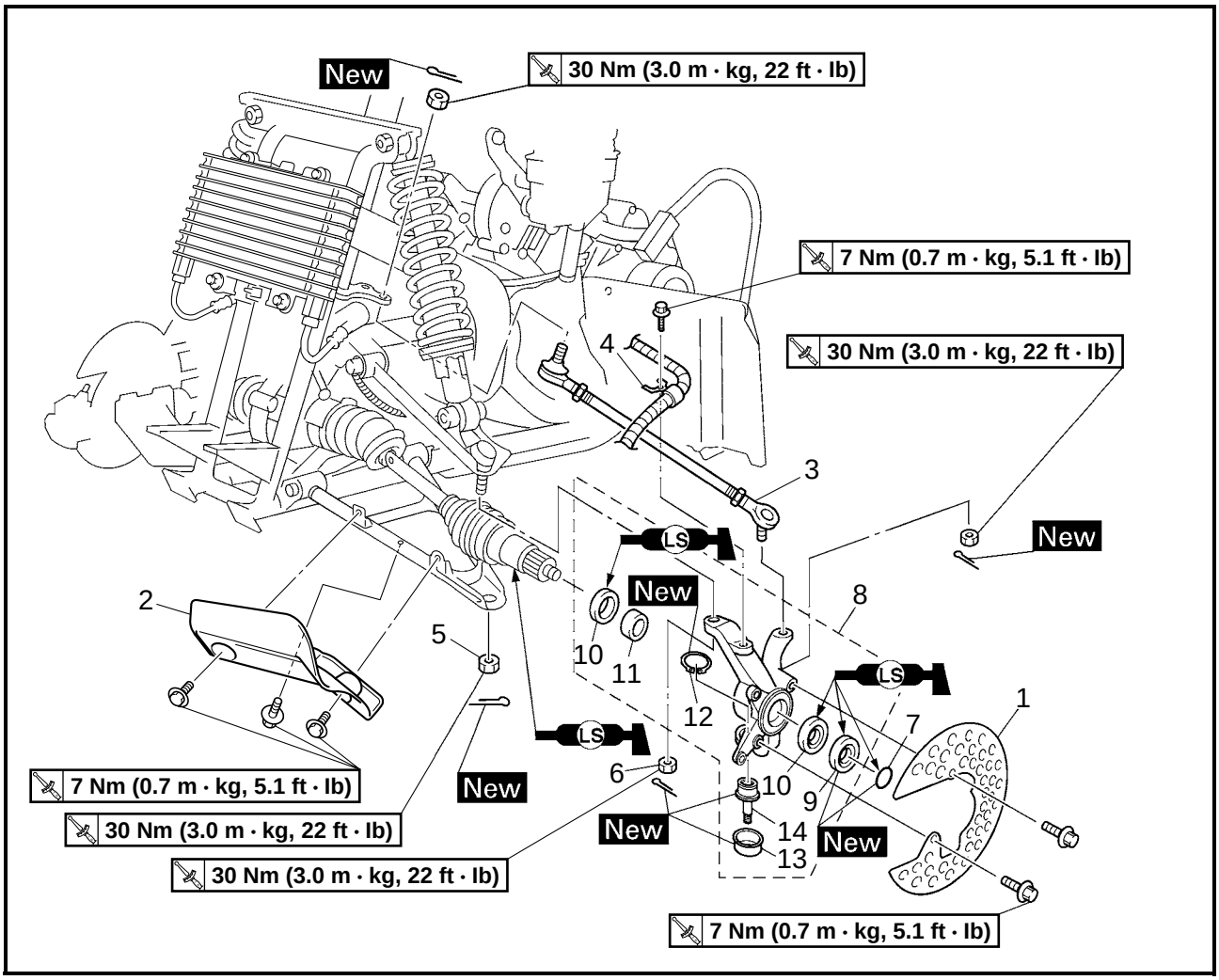


| Order | Job/Part | Q'ty | Remarks |
|---|---|---|---|
| | **Removing the tie rods and steering knuckles** | | Remove the parts in the order listed. The following procedure applies to both of the tie-rods and steering knuckles. |
| | Front fender | | Refer to "SEAT, CARRIERS, FENDERS, FUEL TANK AND AIR FILTER" in chapter 3. |
| | Front wheel/brake disc | | Refer to "FRONT AND REAR WHEELS". |
| 1 | Brake disc guard | 1 | |
| 2 | Front arm protector | 1 | |
| 3 | Tie rod | 1 | Refer to "INSTALLING THE TIE RODS". |
| 4 | Brake hose holder | 1 | |
| 5 | Nut | 1 | |
| 6 | Nut | 1 | |
| 7 | O-ring | 1 | |

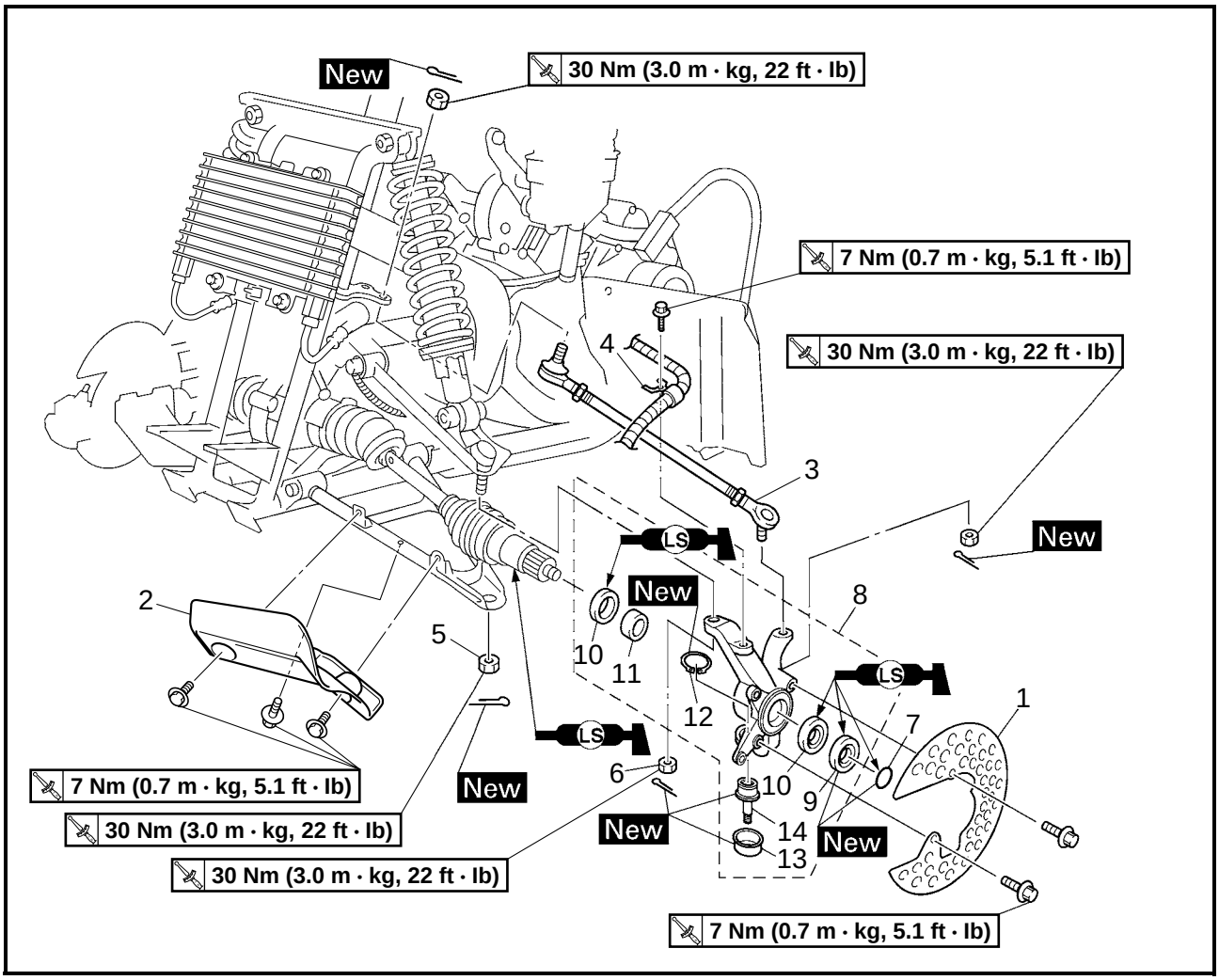


| Order | Job/Part | Q'ty | Remarks |
|---|---|---|---|
| 8 | Steering knuckle | 1 | Refer to "REMOVING THE STEERING KNUCKLES". |
| 9 | Oil seal | 1 | |
| 10 | Bearing | 2 | |
| 11 | Spacer | 1 | |
| 12 | Circlip | 1 | |
| 13 | Rubber boot | 1 | |
| 14 | Ball joint | 1 | |
| | | | For installation, reverse the removal procedure. |

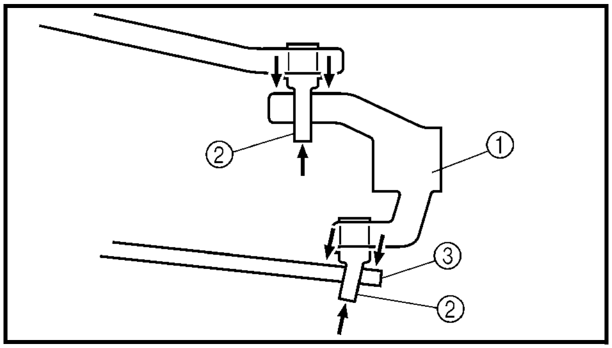


### REMOVING THE STEERING KNUCKLES
1. Remove:
   - steering knuckle ①

**NOTE:**
Use a general puller to separate the ball joints ② from the steering knuckle ① or the front lower arm ③.

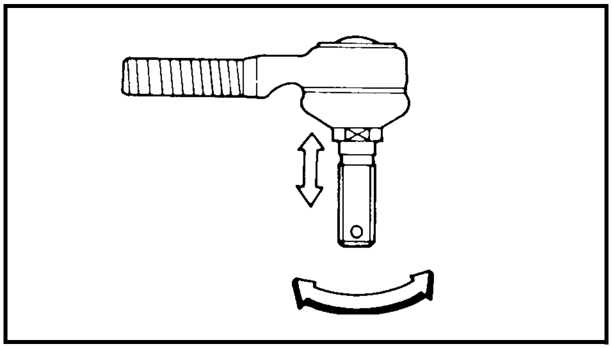

### CHECKING THE TIE RODS
1. Check:
   - tie rod free play and movement
     Free play → Replace the tie rod end.
     Turns roughly → Replace the tie rod end.
2. Check:
   - tie rods
     Bends/damage → Replace.

### CHECKING THE STEERING KNUCKLES
1. Check:
   - steering knuckles
     Damage/pitting → Replace.

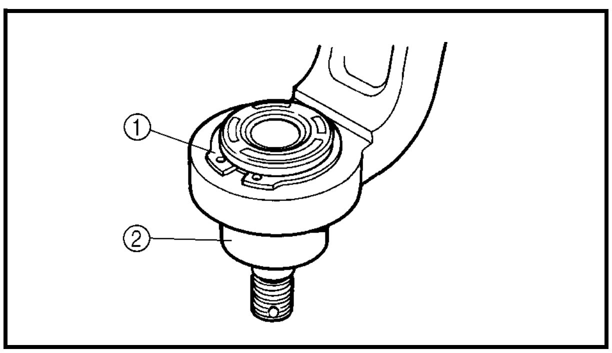


2. Check:
   - ball joints
     Damage/pitting → Replace the ball joint.
     Free play → Replace the ball joint.
     Turns roughly → Replace the ball joint.

▼▼▼▼▼▼▼▼▼▼▼▼▼▼▼▼▼▼▼▼▼▼▼▼▼▼▼▼▼▼▼▼▼▼

a. Clean the outside of the steering knuckle.
b. Remove the steering knuckle oil seal.
c. Remove the circlip ① and rubber boot ②.
   Use the ball joint remover and installer set.

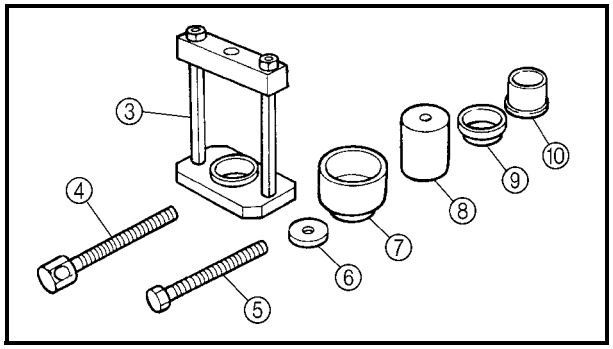


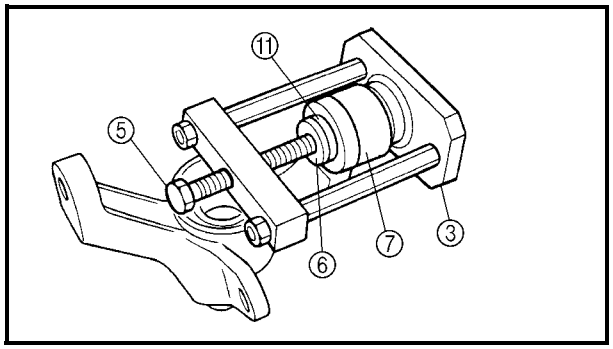


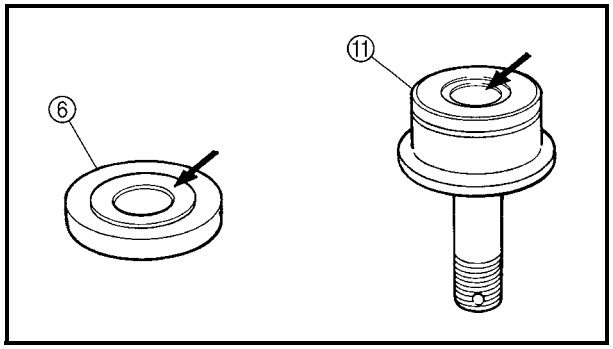


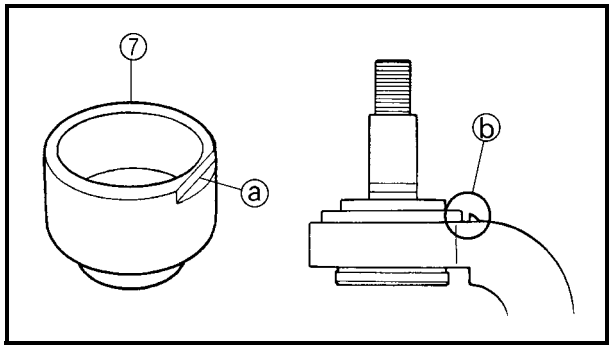


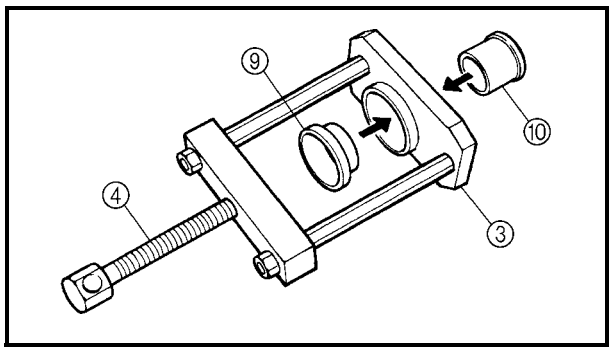


**Ball joint remover**
**90890-01474, YM-01474**
**Ball joint remover/installer attachment set**
**90890-01477, YM-01477**

| | | |
|---|---|---|
| ③ | **Body** | **90890-01474**<br>**YM-01474** |
| ④ | **Long bolt** | **90890-01474**<br>**YM-01474** |
| ⑤ | **Short bolt** | **90890-01477**<br>**YM-01477** |
| ⑥ | **Remover washer** | **90890-01477**<br>**YM-01477** |
| ⑦ | **Remover spacer** | **90890-01477**<br>**YM-01477** |
| ⑧ | **Installer attachment** | **90890-01477**<br>**YM-01477** |
| ⑨ | **Installer spacer** | **90890-01477**<br>**YM-01477** |
| ⑩ | **Installer guide** | **90890-01477**<br>**YM-01477** |

d. Install the body ③, short bolt ⑤, remover washer ⑥ and remover spacer ⑦ onto ball joint.

**NOTE:**
- Remover washer ⑥ must be aligned with the projection on the head of the ball joint.
- Surface ⓐ of the remover spacer ⑦ must be aligned with surface ⓑ of the steering knuckle.

e. Hold the body ③ in place while turning in the short bolt ⑤ to remove the ball joint ⑪ from the steering knuckle.
f. Remove the ball joint remover/installer.

g. Install the long bolt ④, installer spacer ⑨ and installer guide ⑩ onto the body ③.

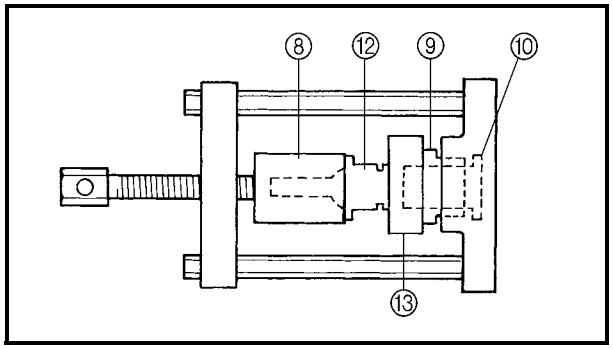


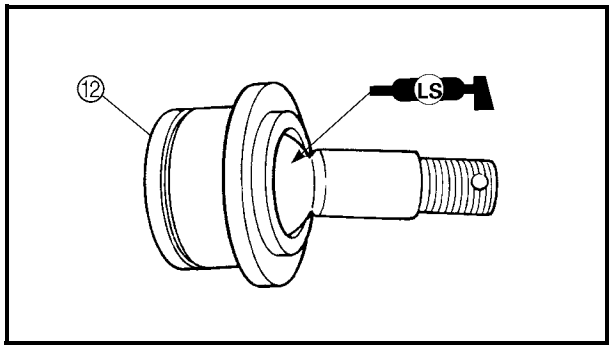


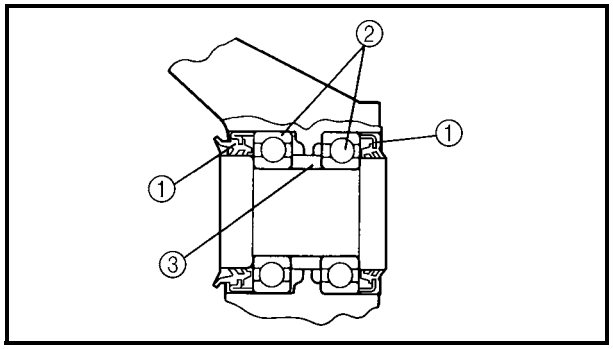


h. Attach the assembled ball joint remover/ installer, new ball joint ⑫ and installer attachment ⑧ to the steering knuckle ⑬.

**NOTE:**
Do not tap or damage the top of the ball joint.

i. Hold the body ③ in place while turning in the long bolt ④ to install the new ball joint ⑫ into the steering knuckle ⑬.
j. Remove the ball joint remover/installer.
k. Apply lithium-soap base grease to the new ball joint ⑫.
l. Install a new rubber boot and new circlip.

**NOTE:**
Always use a new ball joint set.

m. Install a steering knuckle oil seal.

▲▲▲▲▲▲▲▲▲▲▲▲▲▲▲▲▲▲▲▲▲▲▲▲▲▲▲▲▲▲▲▲▲▲

3. Check:
   - front wheel bearings
     Bearings allow play in the wheel hubs or the wheel turns roughly → Replace.
   - oil seals
     Damage → Replace.

▼▼▼▼▼▼▼▼▼▼▼▼▼▼▼▼▼▼▼▼▼▼▼▼▼▼▼▼▼▼▼▼▼▼

a. Clean the outside of the steering knuckle.
b. Remove the oil seals ①.
c. Drive out the bearings ②.

**WARNING**

**Eye protection is recommended when using striking tools.**

d. Remove the spacer ③.
e. Apply lithium base grease to the bearings and oil seals.
f. Install the spacer to the steering knuckle.
g. Install the new bearings.

**NOTE:**
Install the outside bearing first.

**CAUTION:**

**Do not strike the center race or balls of the bearing. Make sure to strike the outer race only.**

h. Install the new oil seals.

**NOTE:**
When installing the oil seals, make sure the "seal side" of the oil seal faces out.

▲▲▲▲▲▲▲▲▲▲▲▲▲▲▲▲▲▲▲▲▲▲▲▲▲▲▲▲▲▲▲▲▲▲

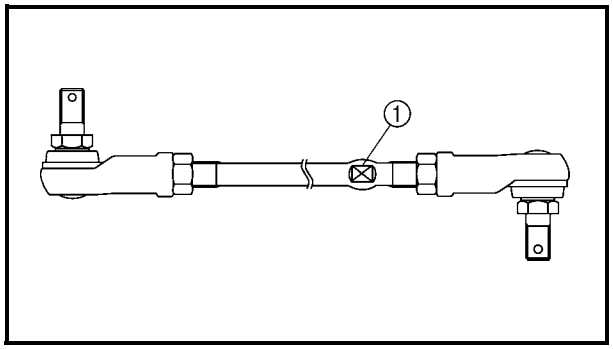


**INSTALLING THE TIE RODS**

1. Install:
   - tie rods (left and right)

| | |
|---|---|
| | **30 Nm (3.0 m · kg, 22 ft · lb)** |

**NOTE:**
The tie rod side which must be installed on the out side can be identified by grooves ①.

2. Adjust:
   - toe-in
     Refer to "ADJUSTING THE TOE-IN" in chapter 3.

## FRONT ARMS AND FRONT SHOCK ABSORBERS

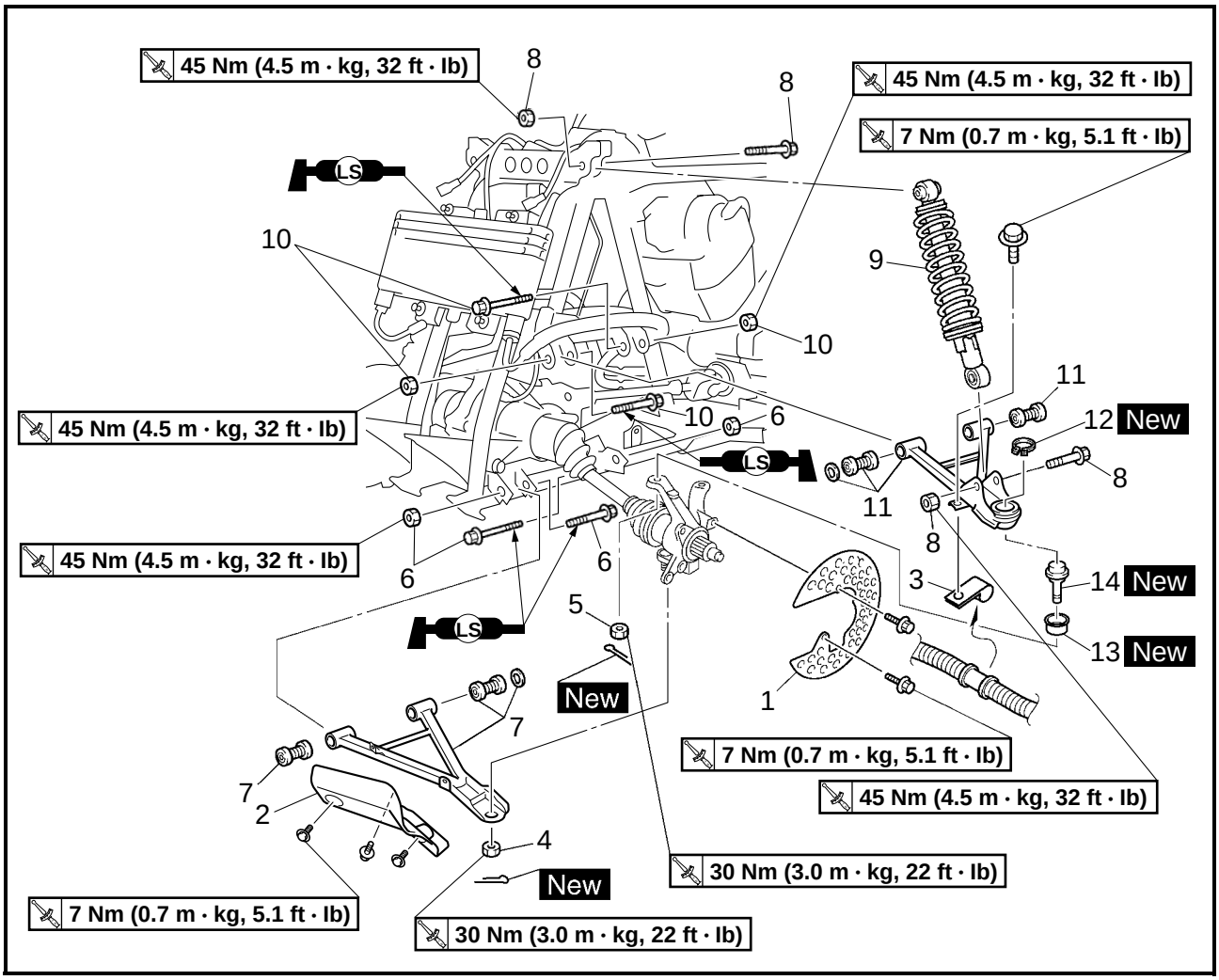


| Order | Job/Part | Q'ty | Remarks |
|---|---|---|---|
| | **Removing the front arms and front shock absorbers** | | Remove the parts in the order listed. The following procedure applies to both of the front arms and front shock absorbers. |
| | Front fender | | Refer to "SEAT, CARRIERS, FENDERS, FUEL TANK AND AIR FILTER" in chapter 3. |
| | Front wheel/brake disc | | Refer to "FRONT AND REAR WHEELS". |
| 1 | Brake disc guard | 1 | |
| 2 | Front arm protector | 1 | |
| 3 | Brake hose holder | 1 | |

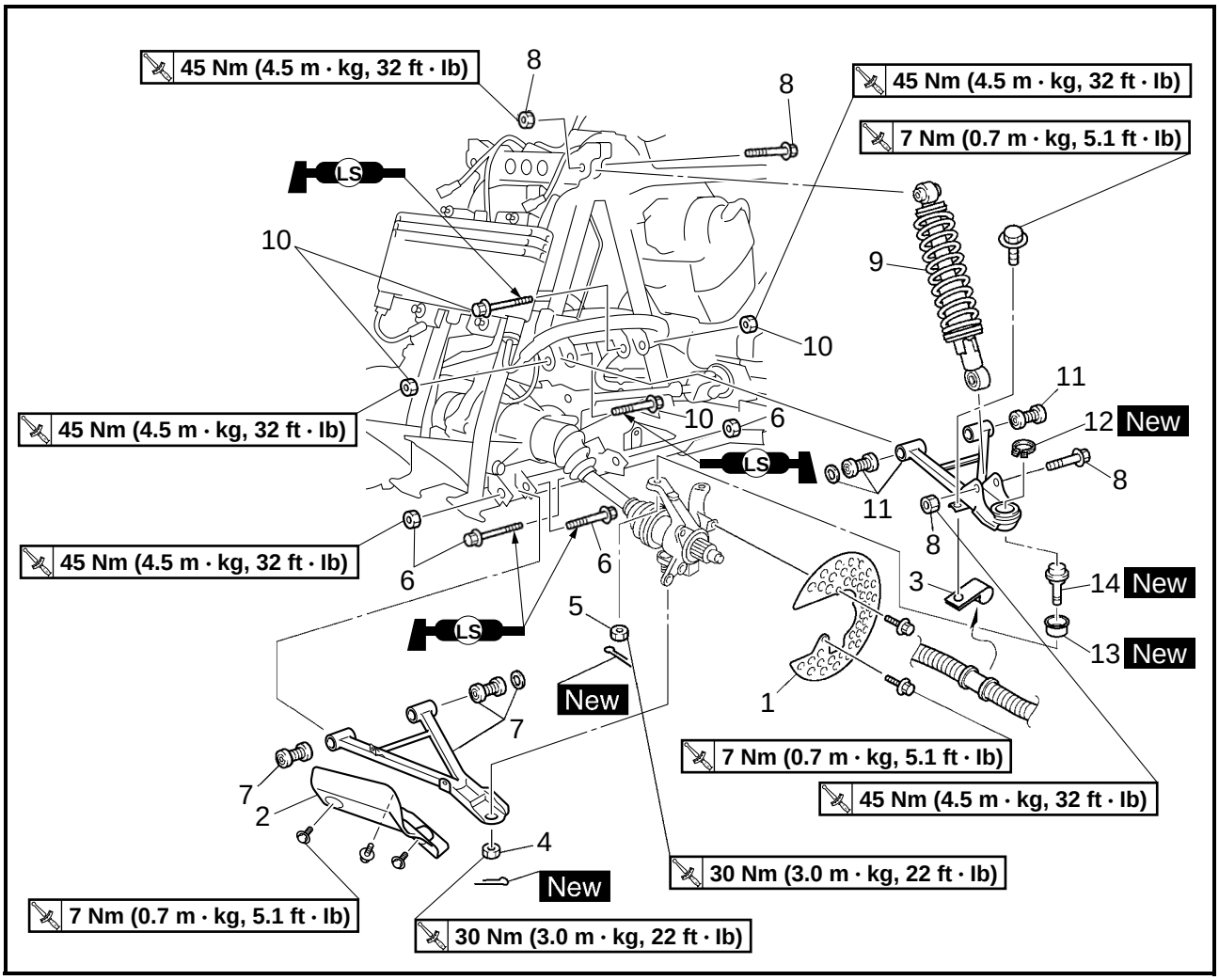


| Order | Job/Part | Q'ty | Remarks |
|---|---|---|---|
| 4 | Nut | 1 | Refer to "REMOVING THE FRONT ARMS" and "INSTALLING THE FRONT ARMS AND FRONT SHOCK ABSORBERS". |
| 5 | Nut | 1 | |
| 6 | Bolt/nut | 2/2 | |
| 7 | Front lower arm/washer/bushing | 1/1/2 | |
| 8 | Nut/bolt | 2/2 | |
| 9 | Front shock absorber | 1 | |
| 10 | Bolt/nut | 2/2 | |
| 11 | Front upper arm/washer/bushing | 1/1/2 | |
| 12 | Circlip | 1 | |
| 13 | Rubber boot | 1 | |
| 14 | Ball joint | 1 | |
| | | | For installation, reverse the removal procedure. |

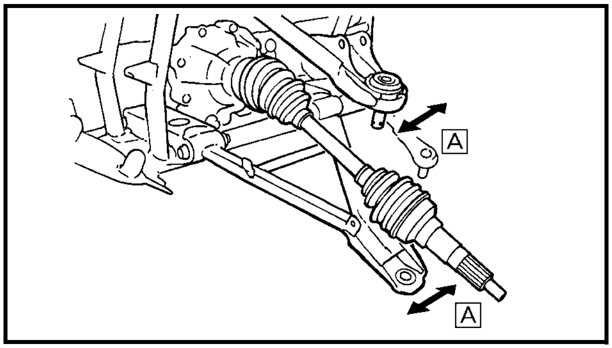


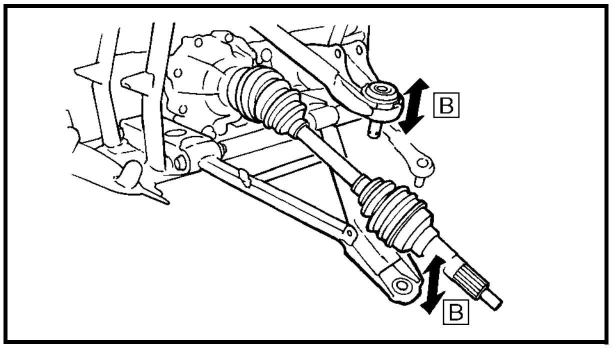


## REMOVING THE FRONT ARMS

1. Check:
   - front arm free play

▼▼▼▼▼▼▼▼▼▼▼▼▼▼▼▼▼▼▼▼▼▼▼▼▼▼▼▼▼▼▼▼▼▼

a. Check the front arm side play [A] by moving it from side to side.
   If side play is noticeable, check the bushings.
b. Check the front arm vertical movement [B] by moving it up and down.
   If the vertical movement is tight or rough, or if there is binding, check the bushings.

▲▲▲▲▲▲▲▲▲▲▲▲▲▲▲▲▲▲▲▲▲▲▲▲▲▲▲▲▲▲▲▲▲▲

2. Remove:
   - front arms

## CHECKING THE FRONT ARMS

1. Check:
   - front arms
     Bends/damage → Replace.
2. Check:
   - bushings
     Wear/damage → Replace.
3. Check:
   - ball joint
     Damage/pitting → Replace the ball joint.
     Free play → Replace the ball joint.
     Turns roughly → Replace the ball joint.

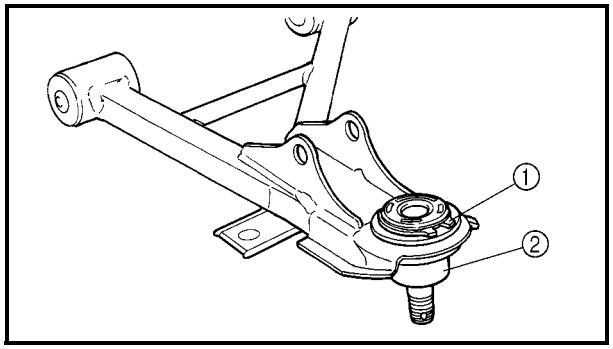


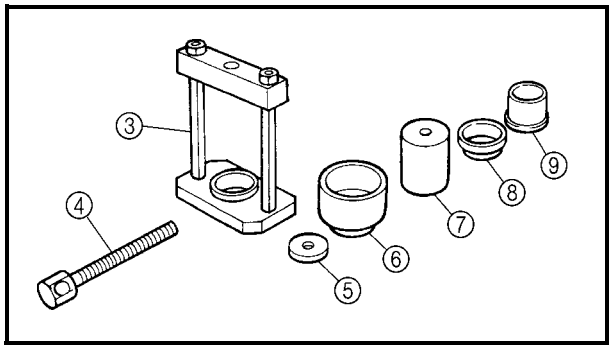


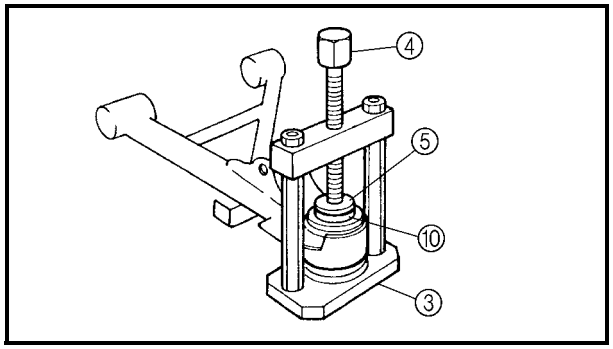


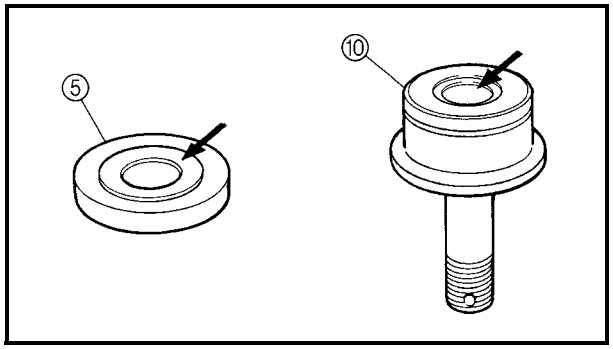


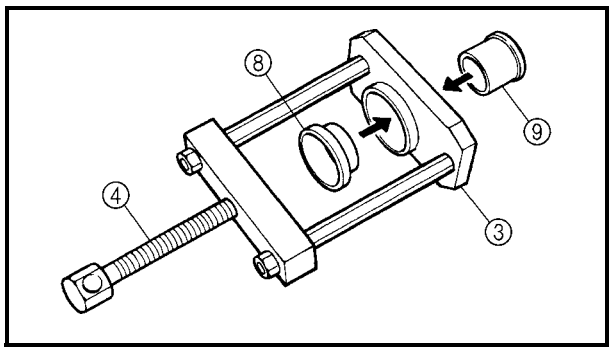


a. Clean the outside of the front lower arm.
b. Remove the circlip ① and rubber boot ②.
   Use the ball joint remover and installer set.

**Ball joint remover**
**90890-01474, YM-01474**
**Ball joint remover/installer attachment set**
**90890-01477, YM-01477**

| | | |
|---|---|---|
| ③ | **Body** | **90890-01474 YM-01474** |
| ④ | **Long bolt** | **90890-01474 YM-01474** |
| ⑤ | **Remover washer** | **90890-01477 YM-01477** |
| ⑥ | **Remover spacer** | **90890-01477 YM-01477** |
| ⑦ | **Installer attachment** | **90890-01477 YM-01477** |
| ⑧ | **Installer spacer** | **90890-01477 YM-01477** |
| ⑨ | **Installer guide** | **90890-01477 YM-01477** |

c. Install the body ③, long bolt ④, remover washer ⑤ and remover spacer ⑥ onto ball joint.

**NOTE:**
Remover washer ⑤ must be aligned with the projection on the head of the ball joint.

d. Hold the body ③ in place while turning in the long bolt ④ to remove the ball joint ⑩ from the front lower arm.
e. Remove the ball joint remover/installer.

f. Install the long bolt ④, installer spacer ⑧ and installer guide ⑨ onto the body ③.

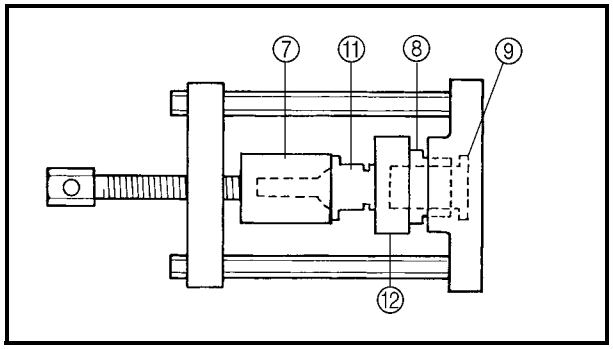


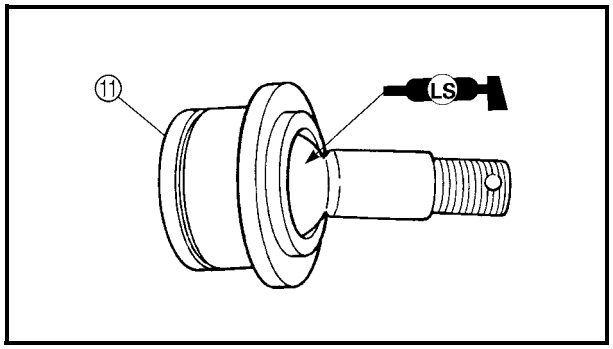


g. Attach the assembled ball joint remover/installer, new ball joint ⑪ and installer attachment ⑦ to the front lower arm ⑫.

**NOTE:**
Do not tap or damage the top of the ball joint.

h. Hold the body ③ in place while turning in the long bolt ④ to install the new ball joint ⑪ into the front lower arm ⑫.
i. Remove the ball joint remover/installer.
j. Apply lithium-soap base grease to the new ball joint ⑪.
k. Install a new rubber boot and new circlip.

**NOTE:**
Always use a new ball joint set.

▲▲▲▲▲▲▲▲▲▲▲▲▲▲▲▲▲▲▲▲▲▲▲▲▲▲▲▲▲▲▲▲

**CHECKING THE FRONT SHOCK ABSORBERS**

1. Check:
   - shock absorber rod
     Bends/damage → Replace the shock absorber assembly.
   - shock absorber assembly
     Oil leaks → Replace the shock absorber assembly.
   - spring
     Fatigue → Replace the shock absorber assembly.
     Move the spring up and down.

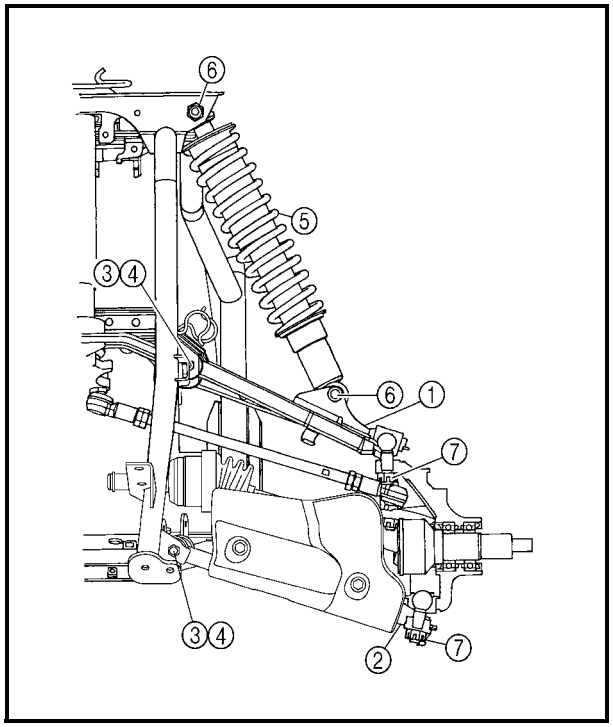


**INSTALLING THE FRONT ARMS AND FRONT SHOCK ABSORBERS**

1. Install:
   - front arms
   - front shock absorber

▼▼▼▼▼▼▼▼▼▼▼▼▼▼▼▼▼▼▼▼▼▼▼▼▼▼▼▼▼▼▼▼▼▼

a. Install the front upper arm ① and front lower arm ②.

**NOTE:**

- Lubricate the bolts ③ with lithium-soap-based grease.
- Be sure to position the bolts ③ so that the bolt head faces inward.
- Temporarily tighten the nuts ④.

b. Install the front shock absorber ⑤.

| | |
|---|---|
| | **Nut ⑥**<br>**45 Nm (4.5 m · kg, 32 ft · lb)** |

c. Install the ball joints.

| | |
|---|---|
| | **Nut ⑦**<br>**30 Nm (3.0 m · kg, 22 ft · lb)** |

d. Install the new cotter pins.

e. Tighten the nuts ④.

| | |
|---|---|
| | **Nut ④**<br>**45 Nm (4.5 m · kg, 32 ft · lb)** |

▲▲▲▲▲▲▲▲▲▲▲▲▲▲▲▲▲▲▲▲▲▲▲▲▲▲▲▲▲▲▲▲▲▲

# REAR KNUCKLES AND STABILIZER

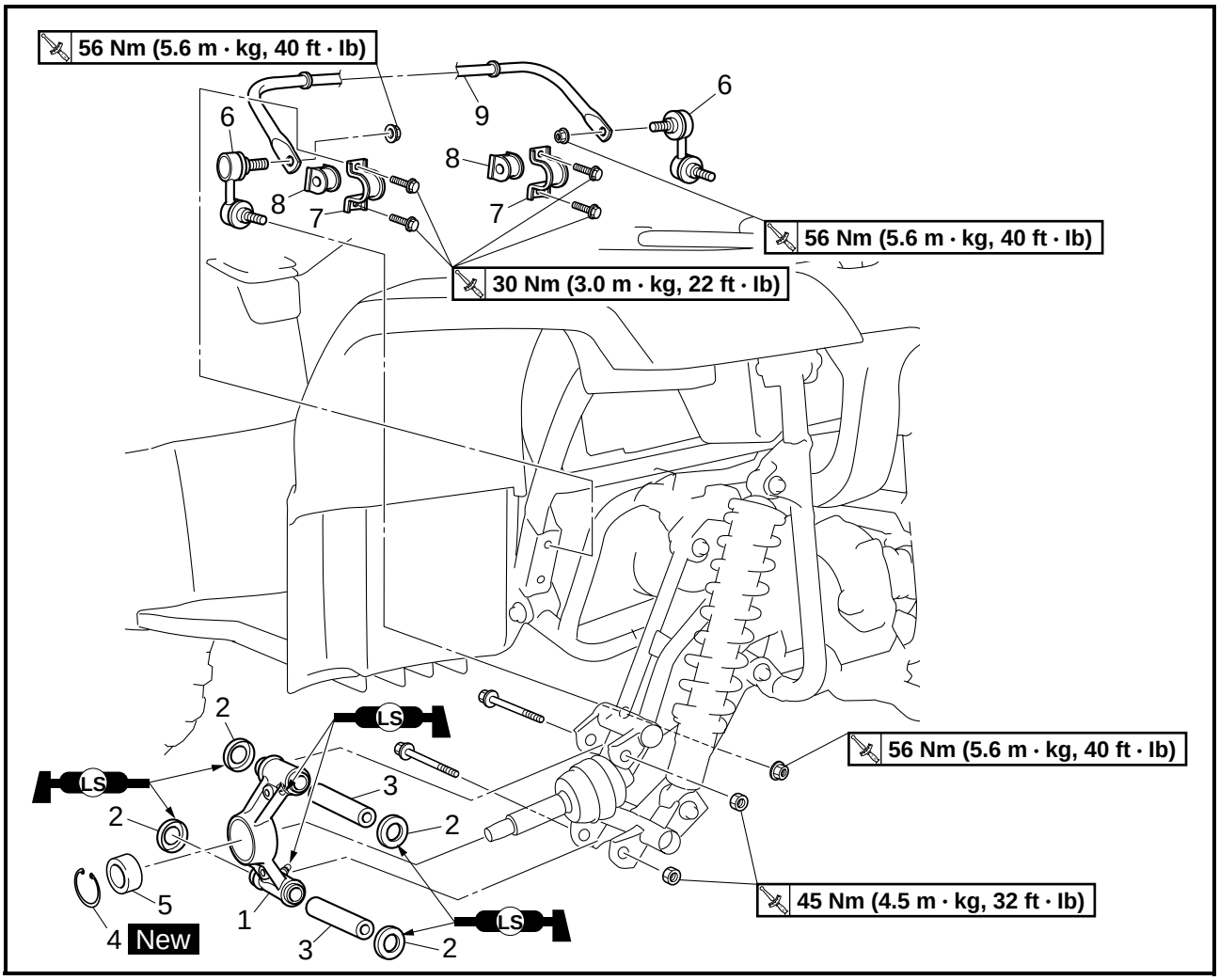


| Order | Job/Part | Q'ty | Remarks |
|---|---|---|---|
| | **Removing the rear knuckles and stabilizer** | | Remove the parts in the order listed. The following procedure applies to both of the rear knuckles. |
| | Rear wheel hubs | | Refer to "FRONT AND REAR WHEELS". |
| 1 | Rear knuckle | 1 | |
| 2 | Spacer cover | 4 | |
| 3 | Spacer | 2 | |
| 4 | Circlip | 1 | |
| 5 | Bearing | 1 | |
| 6 | Stabilizer joint | 2 | |
| 7 | Stabilizer holder | 2 | |
| 8 | Bushing | 2 | |
| 9 | Stabilizer | 1 | |
| | | | For installation, reverse the removal procedure. |

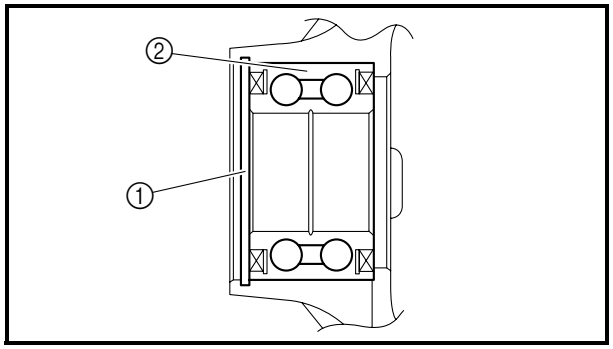


**CHECKING THE REAR KNUCKLES**

1. Check:
   - rear knuckles
     Damage/pitting → Replace.
2. Check:
   - rear wheel bearings
     Bearings allow play in the wheel hubs or the wheel turns roughly → Replace.
   - oil seals
     Damage → Replace.

▼▼▼▼▼▼▼▼▼▼▼▼▼▼▼▼▼▼▼▼▼▼▼▼▼▼▼▼▼▼▼▼▼▼

a. Clean the outside of the rear knuckle.
b. Remove the circlip ①.
c. Drive out the bearing ②.

**WARNING**

**Eye protection is recommended when using striking tools.**

d. Install a new bearing.

**CAUTION:**

**Do not strike the center race or balls of the bearing. Make sure to strike the outer race only.**

e. Install a new circlip.

▲▲▲▲▲▲▲▲▲▲▲▲▲▲▲▲▲▲▲▲▲▲▲▲▲▲▲▲▲▲▲▲▲▲

**CHECKING THE STABILIZER**

1. Check:
   - stabilizer
     Bends/cracks/damage → Replace.

## REAR ARMS AND REAR SHOCK ABSORBERS

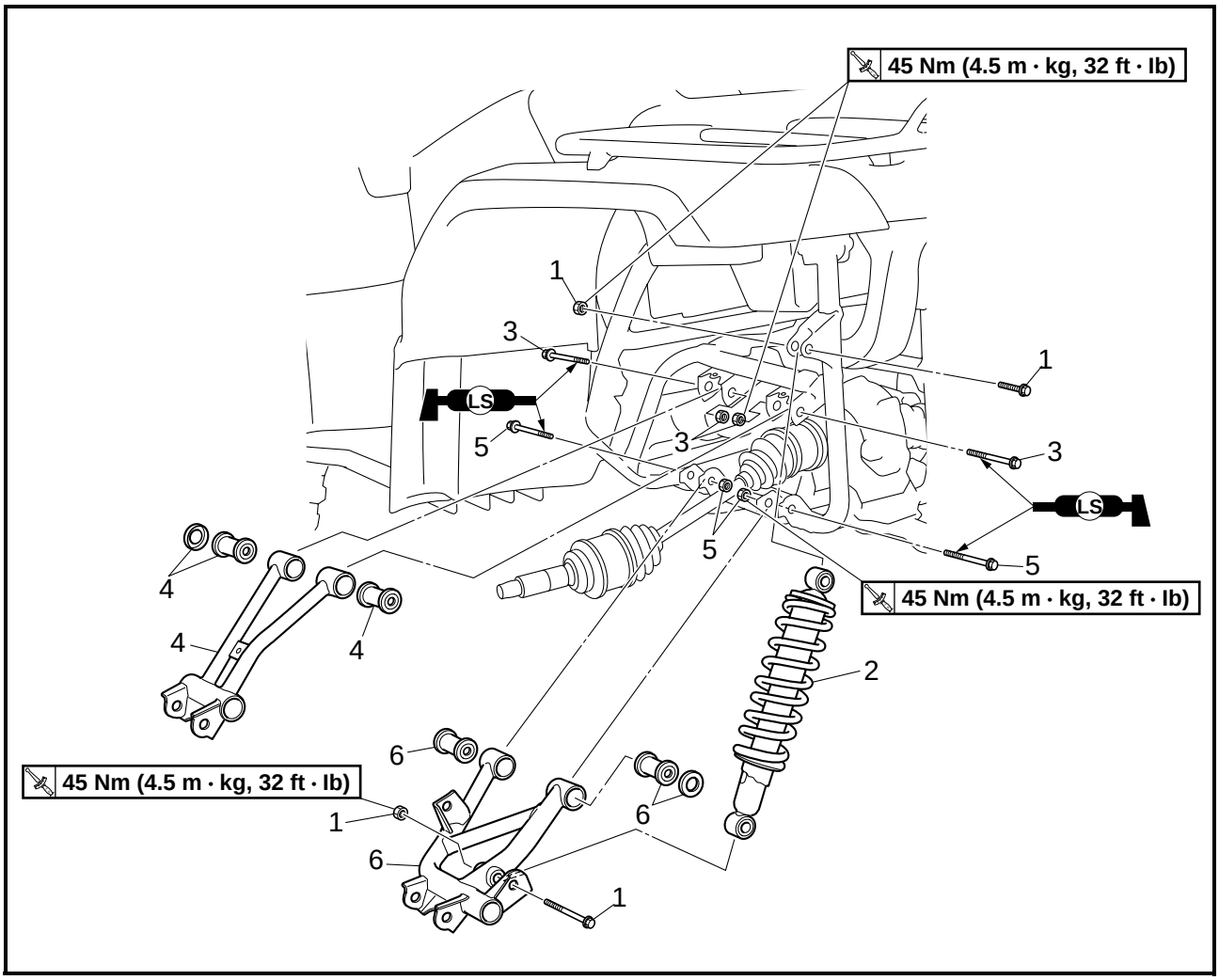


| Order | Job/Part | Q'ty | Remarks |
|---|---|---|---|
| | **Removing the rear arms and rear shock absorbers** | | Remove the parts in the order listed. The following procedure applies to both of the rear arms and rear shock absorbers. |
| | Rear knuckle/stabilizer | | Refer to "REAR KNUCKLES AND STABILIZER". |
| 1 | Nut/bolt | 2/2 | Refer to "INSTALLING THE REAR ARMS AND REAR SHOCK ABSORBERS". |
| 2 | Rear shock absorber | 1 | |
| 3 | Nut/bolt | 2/2 | |
| 4 | Rear upper arm/washer/bushing | 1/1/2 | |
| 5 | Nut/bolt | 2/2 | |
| 6 | Rear lower arm/washer/bushing | 1/1/2 | |
| | | | For installation, reverse the removal procedure. |

### CHECKING THE REAR ARMS

1. Check:
   - rear arms
     Bends/damage → Replace.
2. Check:
   - bushings
     Wear/damage → Replace.

### CHECKING THE REAR SHOCK ABSORBERS

1. Check:
   - shock absorber rod
     Bends/damage → Replace the shock absorber assembly.
   - shock absorber assembly
     Oil leaks → Replace the shock absorber assembly.
   - spring
     Fatigue → Replace the shock absorber assembly.
     Move the spring up and down.

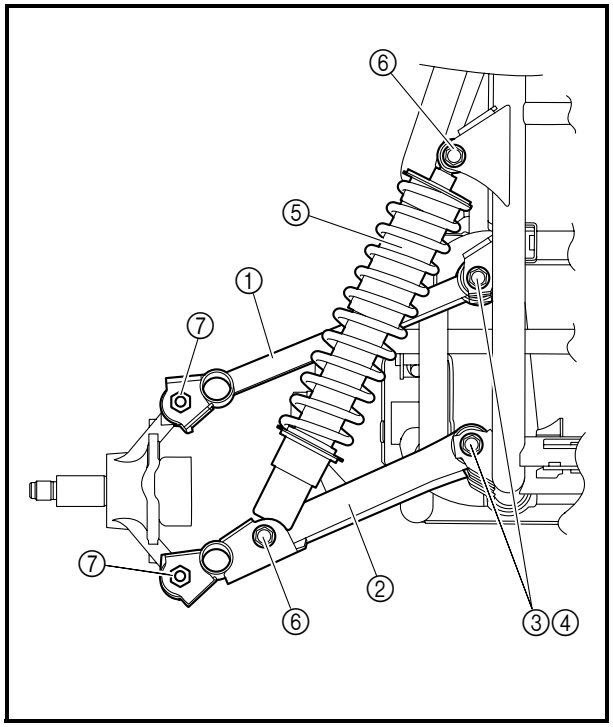


**INSTALLING THE REAR ARMS AND REAR SHOCK ABSORBERS**

1. Install:
   - rear arms
   - rear shock absorbers

▼▼▼▼▼▼▼▼▼▼▼▼▼▼▼▼▼▼▼▼▼▼▼▼▼▼▼▼▼▼▼▼▼▼▼▼▼▼

a. Install the rear upper arm ① and rear lower arm ②.

**NOTE:**

- Lubricate the bolts ③ with lithium-soap-based grease.
- Be sure to position the bolts ③ so that the bolt head faces outward.
- Temporarily tighten the nuts ④.

b. Install the rear shock absorber ⑤.

| | |
|---|---|
| | **Nut ⑥**<br>**45 Nm (4.5 m · kg, 32 ft · lb)** |

c. Install the rear knuckle.

| | |
|---|---|
| | **Nut ⑦**<br>**45 Nm (4.5 m · kg, 32 ft · lb)** |

d. Tighten the nuts ④.

| | |
|---|---|
| | **Nut ④**<br>**45 Nm (4.5 m · kg, 32 ft · lb)** |

▲▲▲▲▲▲▲▲▲▲▲▲▲▲▲▲▲▲▲▲▲▲▲▲▲▲▲▲▲▲▲▲▲▲▲▲▲▲

EBS00500

# ELECTRICAL

## ELECTRICAL COMPONENTS

① Spark plug cap
② Ignition coil
③ Auxiliary DC jack
④ Main switch
⑤ Diode 2
⑥ Thermo switch
⑦ Starter relay
⑧ Main fuse
⑨ Oil cooler fan motor control unit
⑩ Four-wheel-drive motor fuse
⑪ Oil cooler fan motor relay
⑫ Battery
⑬ Diode 1
⑭ CDI unit

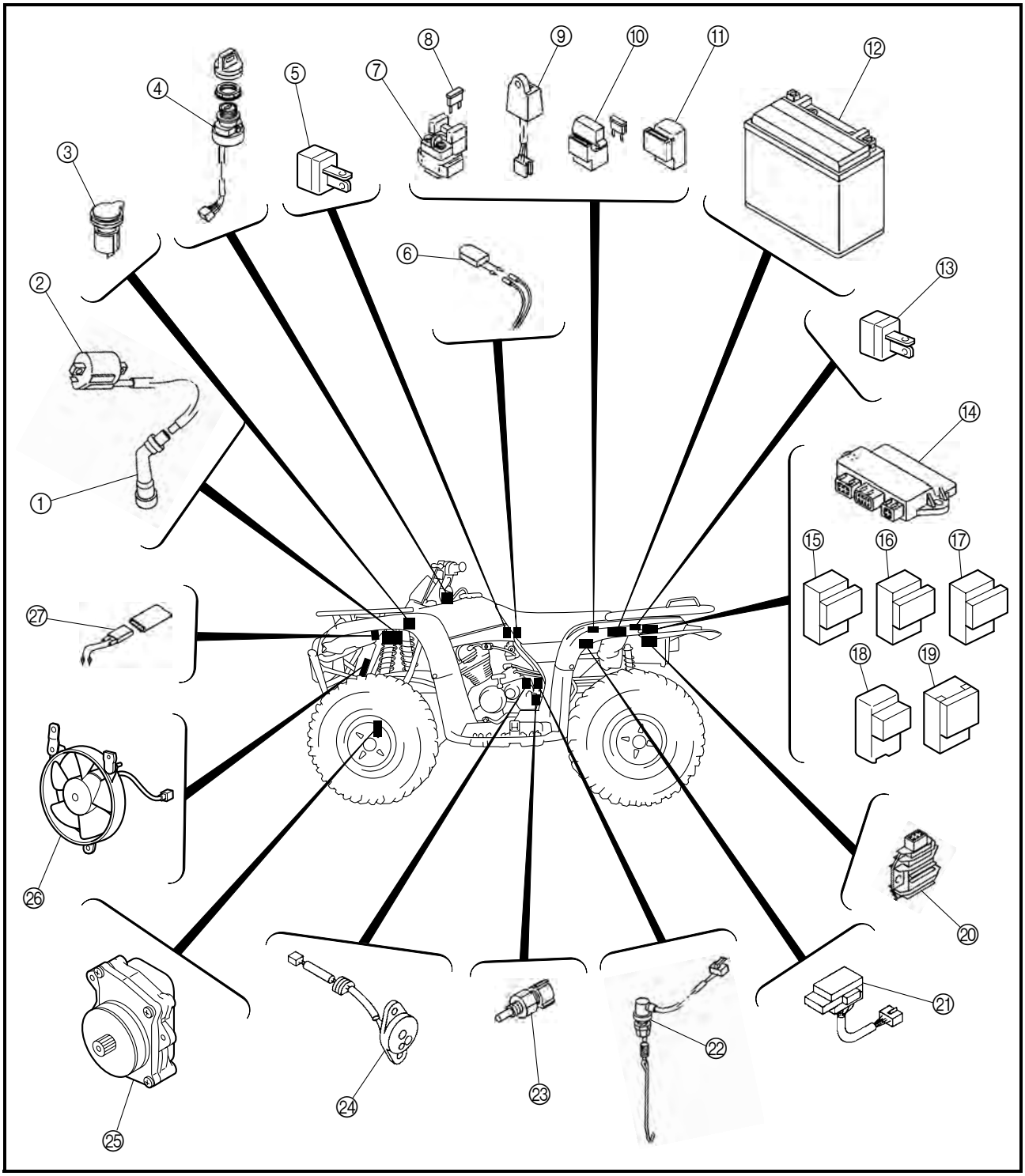

⑮ Four-wheel-drive relay 1
⑯ Four-wheel-drive relay 2
⑰ Headlight relay
⑱ Four-wheel-drive relay 3
⑲ On-command four-wheel-drive indicator light relay
⑳ Rectifier/regulator
㉑ Fuse box
㉒ Brake pedal light switch
㉓ Oil temperature sensor
㉔ Gear position switch
㉕ Differential gear motor
㉖ Oil cooler fan motor
㉗ Oil cooler fan motor circuit breaker

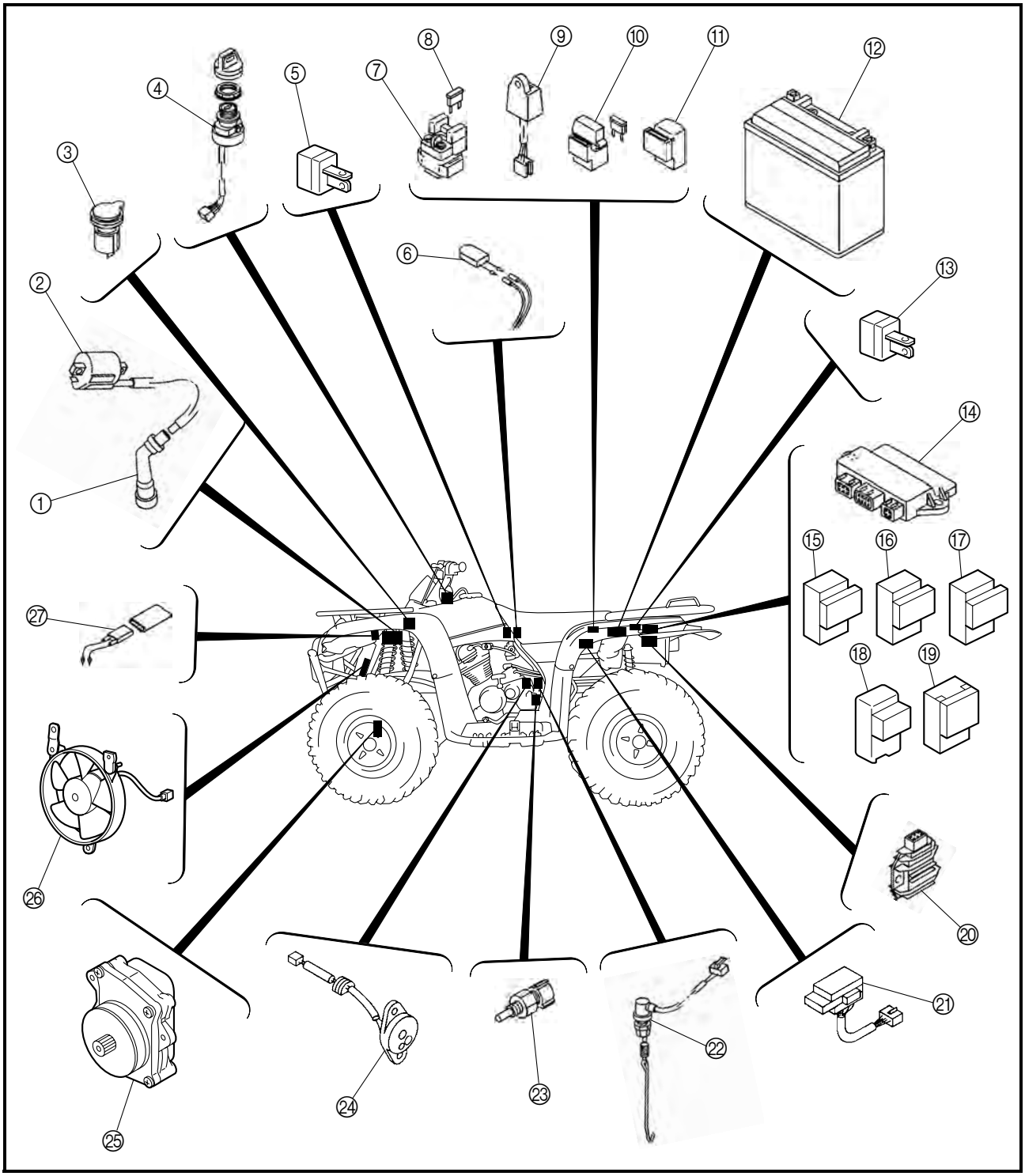

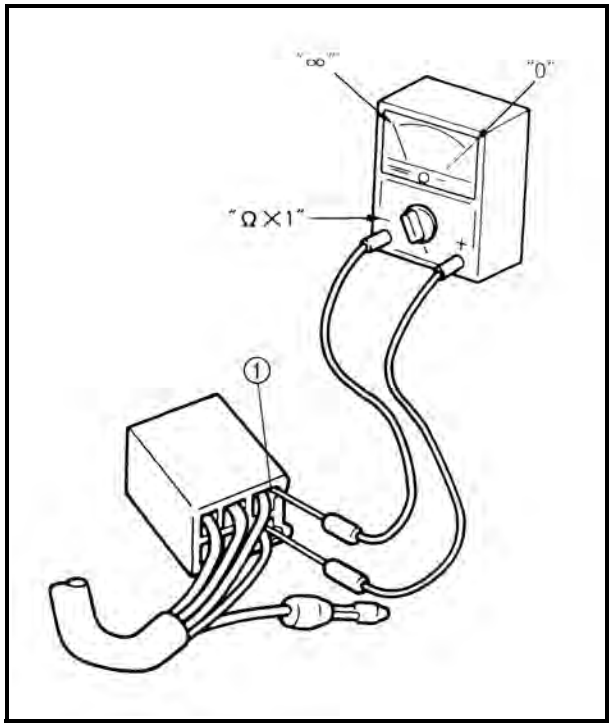


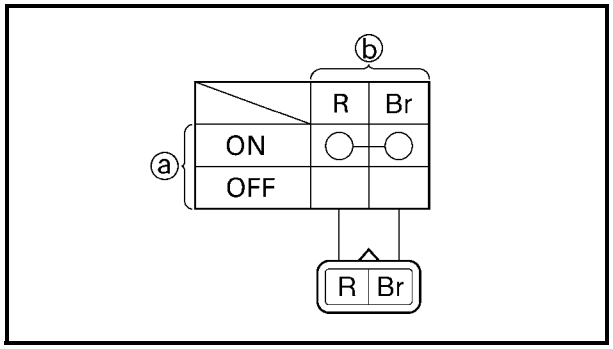


EBS01028

## CHECKING SWITCH CONTINUITY

Check each switch for continuity with the pocket tester. If the continuity reading is incorrect, check the wiring connections and if necessary, replace the switch.

**CAUTION:**

**Never insert the tester probes into the coupler terminal slots ①. Always insert the probes from the opposite end of the coupler, taking care not to loosen or damage the leads.**

**Pocket tester**
**90890-03112**
**Analog pocket tester**
**YU-03112-C**

**NOTE:**

- Before checking for continuity, set the pocket tester to "0" and to the "Ω × 1" range.
- When checking for continuity, switch back and forth between the switch positions a few times.

The terminal connections for switches (e.g., main switch, engine stop switch) are shown in an illustration similar to the one on the left.
The switch positions ⓐ are shown in the far left column and the switch lead colors ⓑ are shown in the top row in the switch illustration.

**NOTE:**

"○——○" indicates a continuity of electricity between switch terminals (i.e., a closed circuit at the respective switch position).

**The example illustration on the left shows that:**

There is continuity between red and brown when the switch is set to "ON".

EBS01029

# CHECKING THE SWITCHES

Check each switch for damage or wear, proper connections, and also for continuity between the terminals. Refer to “CHECKING SWITCH CONTINUITY”.

Damage/wear → Repair or replace.
Improperly connected → Properly connect.
Incorrect continuity reading → Replace the switch.

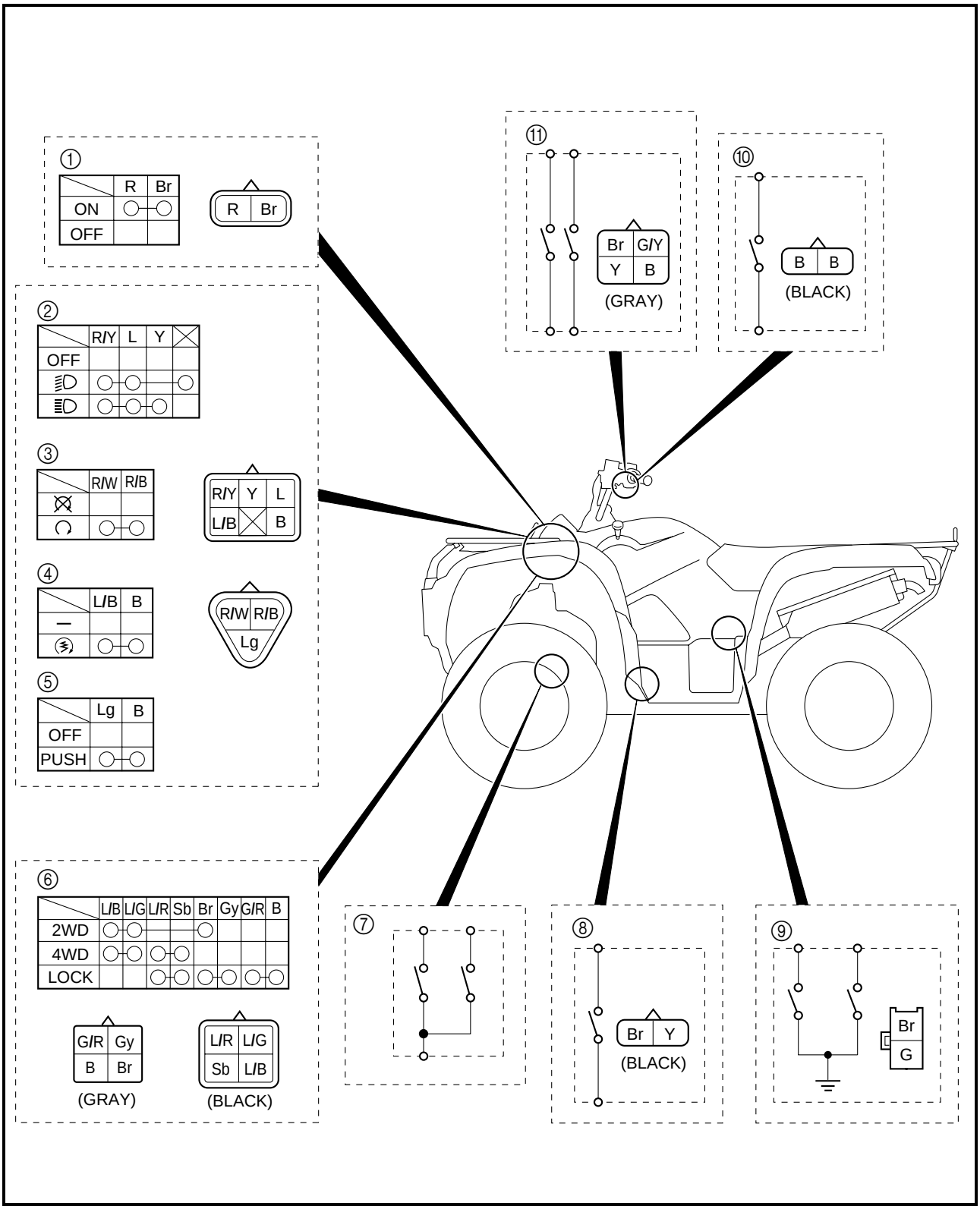

① Main switch
② Light switch
③ Engine stop switch
④ Start switch
⑤ Override switch
⑥ On-command four-wheel-drive motor switch and differential gear lock switch
⑦ Four-wheel-drive motor switch
⑧ Brake pedal light switch
⑨ Gear position switch
⑩ Front brake light switch
⑪ Rear brake lever light switch

EBS01030

## CHECKING THE BULBS AND BULB SOCKETS

Check each bulb and bulb socket for damage or wear, proper connections, and also for continuity between the terminals.

Damage/wear → Repair or replace the bulb, bulb socket or both.
Improperly connected → Properly connect.
No continuity → Repair or replace the bulb, bulb socket or both.

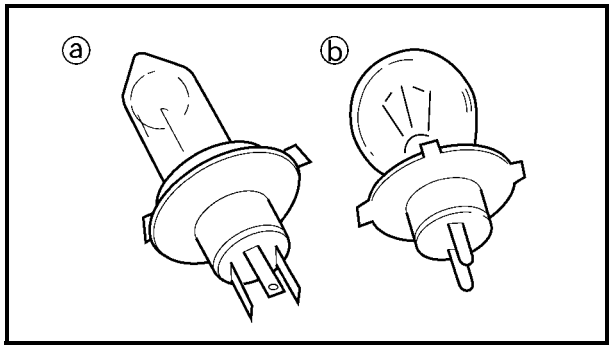


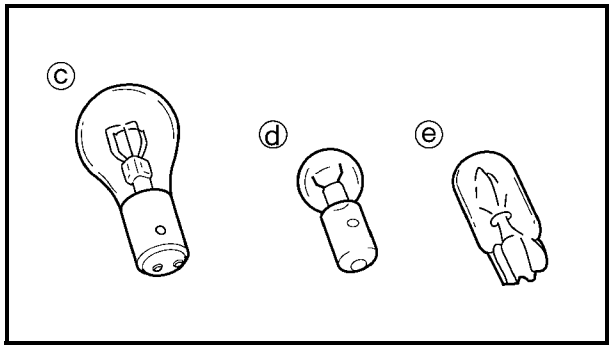


**TYPES OF BULBS**

The bulbs used on this vehicle are shown in the illustration on the left.

- Bulbs ⓐ and ⓑ are used for the headlights and usually use a bulb holder that must be detached before removing the bulb. The majority of these types of bulbs can be removed from their respective socket by turning them counterclockwise.
- Bulbs ⓒ is used for turn signal and tail/brake lights and can be removed from the socket by pushing and turning the bulb counterclockwise.
- Bulbs ⓓ and ⓔ are used for meter and indicator lights and can be removed from their respective socket by carefully pulling them out.

### CHECKING THE CONDITION OF THE BULBS

The following procedure applies to all of the bulbs.

1. Remove:
   - bulb

**WARNING**

**Since the headlight bulb gets extremely hot, keep flammable products and your hands away from the bulb until it has cooled down.**

**CAUTION:**

- **Be sure to hold the socket firmly when removing the bulb. Never pull the lead, otherwise it may be pulled out of the terminal in the coupler.**
- **Avoid touching the glass part of the headlight bulb to keep it free from oil, otherwise the transparency of the glass, the life of the bulb, and the luminous flux will be adversely affected. If the headlight bulb gets soiled, thoroughly clean it with a cloth moistened with alcohol or lacquer thinner.**

2. Check:
   - bulb (for continuity)
     (with the pocket tester)
     No continuity → Replace.

**Pocket tester**
**90890-03112**
**Analog pocket tester**
**YU-03112-C**

**NOTE:**

Before checking for continuity, set the pocket tester to “0” and to the “Ω × 1” range.

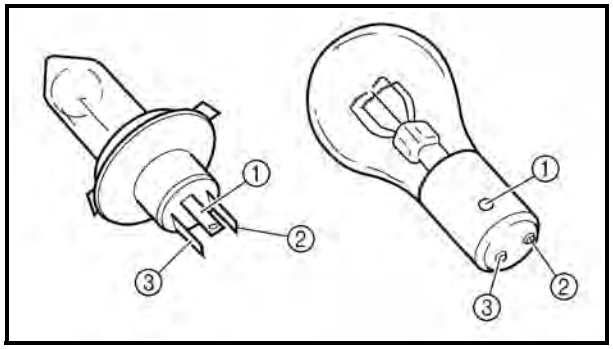


▼▼▼▼▼▼▼▼▼▼▼▼▼▼▼▼▼▼▼▼▼▼▼▼▼▼▼▼▼▼▼▼▼▼

a. Connect the positive tester probe to terminal ① and the negative tester probe to terminal ②, and check the continuity.
b. Connect the positive tester probe to terminal ① and the negative tester probe to terminal ③, and check the continuity.
c. If either of the readings indicate no continuity, replace the bulb.

▲▲▲▲▲▲▲▲▲▲▲▲▲▲▲▲▲▲▲▲▲▲▲▲▲▲▲▲▲▲▲▲▲▲

**CHECKING THE CONDITION OF THE BULB SOCKETS**

The following procedure applies to all of the bulb sockets.

1. Check:
   - bulb socket (for continuity)
     (with the pocket tester)
     No continuity → Replace.

**Pocket tester**
**90890-03112**
**Analog pocket tester**
**YU-03112-C**

**NOTE:**

Check each bulb socket for continuity in the same manner as described in the bulb section; however, note the following.

▼▼▼▼▼▼▼▼▼▼▼▼▼▼▼▼▼▼▼▼▼▼▼▼▼▼▼▼▼▼▼▼▼▼

a. Install a good bulb into the bulb socket.
b. Connect the pocket tester probes to the respective leads of the bulb socket.
c. Check the bulb socket for continuity. If any of the readings indicate no continuity, replace the bulb socket.

▲▲▲▲▲▲▲▲▲▲▲▲▲▲▲▲▲▲▲▲▲▲▲▲▲▲▲▲▲▲▲▲▲▲

EBS00503

# IGNITION SYSTEM

## CIRCUIT DIAGRAM

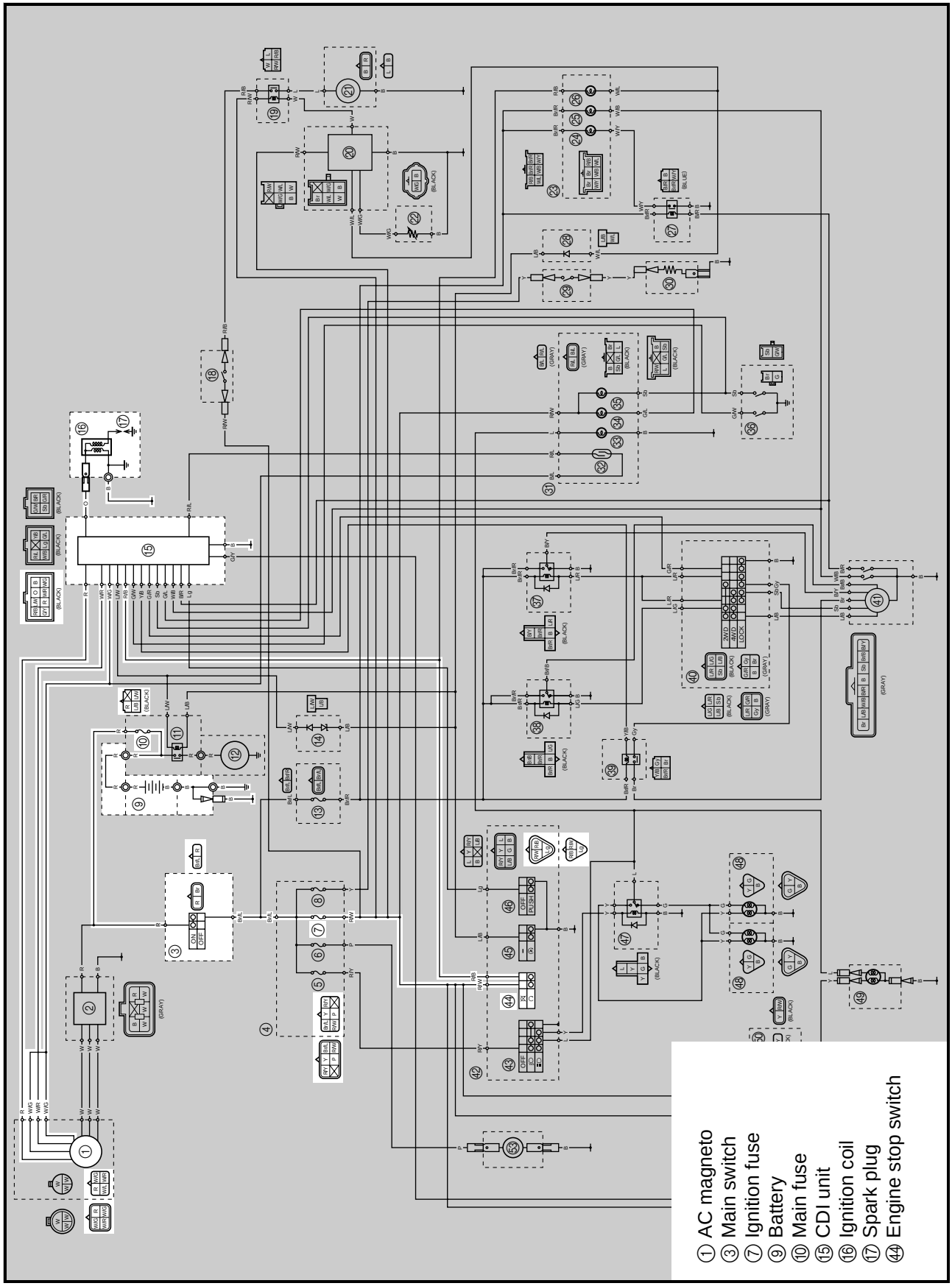

EBS01045

## TROUBLESHOOTING

**The ignition system fails to operate (no spark or intermittent spark).**

Check:
1. main and ignition fuses
2. battery
3. spark plug
4. ignition spark gap
5. spark plug cap resistance
6. ignition coil resistance
7. main switch
8. engine stop switch
9. pickup coil resistance
10. rotor rotation direction detection coil resistance
11. wiring connections (of the entire ignition system)

**NOTE:**
- Before troubleshooting, remove the following part(s):
1. seat
2. front fender
- Troubleshoot with the following special tool(s).

**Ignition checker**
**90890-06754**
**Opama pet-4000 spark checker**
**YM-34487**
**Pocket tester**
**90890-03112**
**Analog pocket tester**
**YU-03112-C**

EBS01043

1. Main and ignition fuses
- Check the main and ignition fuses for continuity.
  Refer to “CHECKING THE FUSES” in chapter 3.
- Are the main and ignition fuses OK?

YES → NO → Replace the fuse(s).

EBS01044

2. Battery
- Check the condition of the battery.
  Refer to “CHECKING AND CHARGING THE BATTERY” in chapter 3.

**Minimum open-circuit voltage**
**12.8 V or more at 20 °C (68 °F)**

- Is the battery OK?

YES → NO →
- Clean the battery terminals.
- Recharge or replace the battery.

EBS01032

3. Spark plug

- Check the condition of the spark plug.
- Check the spark plug type.
- Measure the spark plug gap.
  Refer to “CHECKING THE SPARK PLUG” in chapter 3.

**Standard spark plug**
**DR8EA (NGK)**
**Spark plug gap**
**0.6 ~ 0.7 mm (0.024 ~ 0.028 in)**

- Is the spark plug in good condition, is it of the correct type, and is its gap within specification?

YES ⇩

NO ⇩

Re-gap or replace the spark plug.

EBS01034

4. Ignition spark gap

- Disconnect the spark plug cap from the spark plug.
- Connect the ignition checker ① as shown.
  ② Spark plug cap
- Set the main switch to “ON”.
- Measure the ignition spark gap ⓐ.
- Crank the engine by pushing the start switch and gradually increase the spark gap until a misfire occurs.

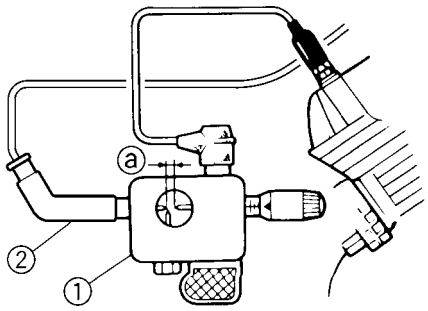


**Minimum ignition spark gap**
**6.0 mm (0.24 in)**

- Is there a spark and is the spark gap within specification?

NO ⇩

YES ⇩

The ignition system is OK.

EBS01036

5. Spark plug cap resistance

- Remove the spark plug cap from the spark plug lead.
- Connect the pocket tester (Ω × 1k) to the spark plug cap as shown.
- Measure the spark plug cap resistance.

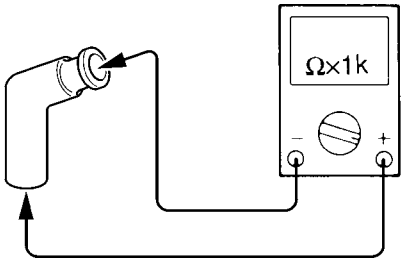


**Spark plug cap resistance**
**10.0 kΩ at 20 °C (68 °F)**

- Is the spark plug cap OK?

YES

NO

Replace the spark plug cap.

EBS01038

6. Ignition coil resistance

- Disconnect the ignition coil connectors from the ignition coil terminals.
- Connect the pocket tester (Ω × 1) to the ignition coil as shown.

**Positive tester probe → orange lead terminal ①**
**Negative tester probe → ignition coil base ②**

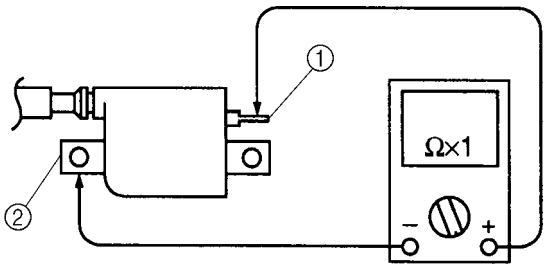


- Measure the primary coil resistance.

**Primary coil resistance**
**0.18 ~ 0.28 Ω at 20 °C (68 °F)**

- Connect the pocket tester (Ω × 1k) to the ignition coil as shown.

**Positive tester probe → orange terminal ①**
**Negative tester probe → spark plug lead ②**

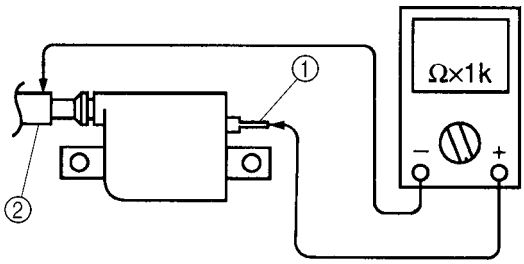


- Measure the secondary coil resistance.

**Secondary coil resistance**
**6.32 ~ 9.48 kΩ at 20 °C (68 °F)**

- Is the ignition coil OK?

YES

NO

Replace the ignition coil.

EBS01041

**7. Main switch**

- Check the main switch for continuity.
  Refer to “CHECKING THE SWITCHES”.
- Is the main switch OK?

YES ⇩

NO ⬇

Replace the main switch.

EBS01042

**8. Engine stop switch**

- Check the engine stop switch for continuity.
  Refer to “CHECKING THE SWITCHES”.
- Is the engine stop switch OK?

YES ⇩

NO ⬇

Replace the left handlebar switch.

EBS01040

**9. Pickup coil resistance**

- Disconnect the AC magneto coupler from the wire harness.
- Connect the pocket tester (Ω × 100) to the AC magneto coupler as shown.

**Positive tester probe → white/red ①**
**Negative tester probe → white/green ②**

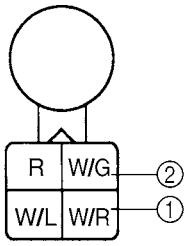


- Measure the pickup coil resistance.

**Pickup coil resistance**
**459 ~ 561 Ω at 20 °C (68 °F)**

- Is the pickup coil OK?

YES ⇩

NO ⬇

Replace the pickup coil/stator assembly.

10.Rotor rotation direction detection coil resistance

- Disconnect the AC magneto coupler from the wire harness.
- Connect the pocket tester (Ω × 1) to the AC magneto coupler as shown.

**Positive tester probe → red ①**
**Negative tester probe → white/blue ②**

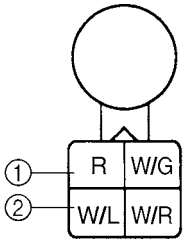


- Measure the rotor rotation direction detection coil resistance.

**Rotor rotation direction detection coil resistance**
**0.104 ~ 0.127 Ω at 20 °C (68 °F)**

- Is the rotor rotation direction detection coil OK?

YES → NO → Replace the pickup coil/stator assembly.

EBS01047

11.Wiring

- Check the entire ignition system wiring. Refer to “CIRCUIT DIAGRAM”.
- Is the ignition system wiring properly connected and without defects?

YES → Replace the CDI unit.

NO → Properly connect or repair the ignition system wiring.

EBS00506

# ELECTRIC STARTING SYSTEM

## CIRCUIT DIAGRAM

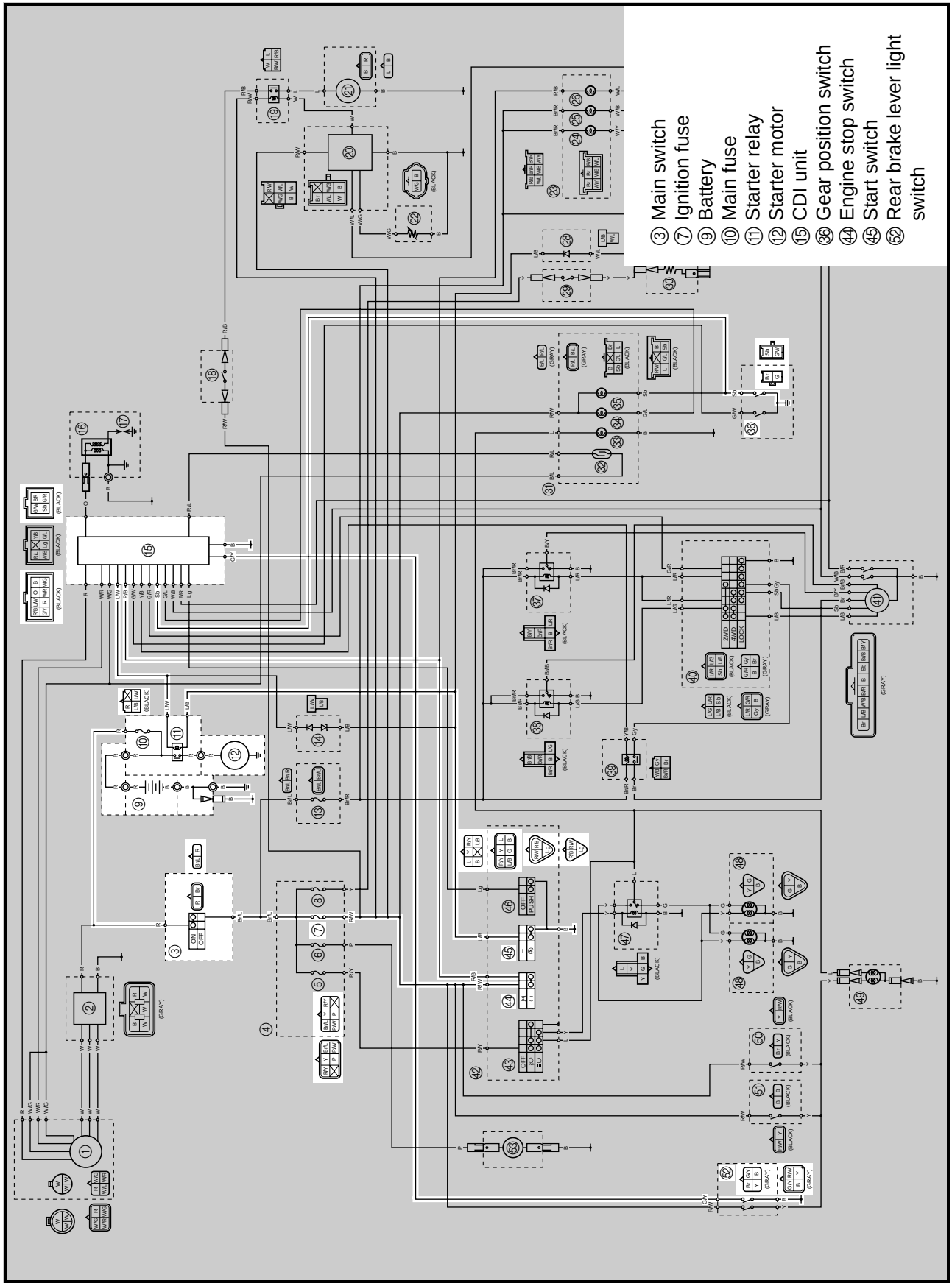

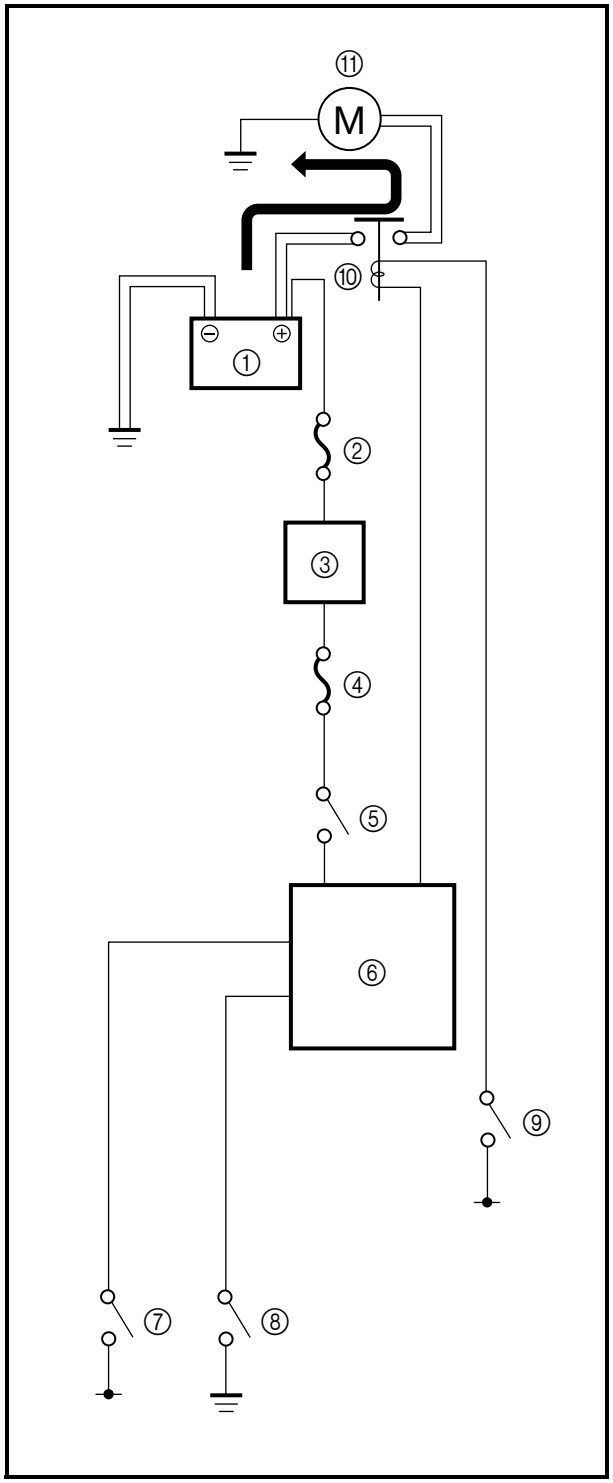


EBS00507

## STARTING CIRCUIT OPERATION

The starting circuit on this model consists of the starter motor, starter relay, CDI unit, rear brake lever light switch and gear position switch. If the main switch is on and the engine stop switch is "◯" position, the starter motor can be operated only if:

- The transmission is in neutral (the neutral switch circuit of the gear position switch is closed).

**or**

- You pull in the rear brake lever (the rear brake lever light switch circuit is closed).

① Battery
② Main fuse
③ Main switch
④ Ignition fuse
⑤ Engine stop switch
⑥ CDI unit
⑦ Rear brake lever light switch
⑧ Gear position switch
⑨ Start switch
⑩ Starter relay
⑪ Starter motor

EBS01048

## TROUBLESHOOTING

**The starter motor fails to turn.**

Check:
1. main and ignition fuses
2. battery
3. starter motor
4. starter relay
5. main switch
6. engine stop switch
7. start switch
8. rear brake lever light switch
9. gear position switch
10. wiring connections
    (of the entire starting system)

**NOTE:**
- Before troubleshooting, remove the following part(s):
1. seat
2. rear fender
3. front fender
- Troubleshoot with the following special tool(s).

**Pocket tester**
**90890-03112**
**Analog pocket tester**
**YU-03112-C**

EBS01043

1. Main and ignition fuses
- Check the main and ignition fuses for continuity.
  Refer to "CHECKING THE FUSES" in chapter 3.
- Are the main and ignition fuses OK?

YES → NO → Replace the fuse(s).

EBS01044

2. Battery
- Check the condition of the battery.
  Refer to "CHECKING AND CHARGING THE BATTERY" in chapter 3.

**Minimum open-circuit voltage**
**12.8 V or more at 20 °C (68 °F)**

- Is the battery OK?

YES → NO →
- Clean the battery terminals.
- Recharge or replace the battery.

EBS01051

3. Starter motor
- Connect the positive battery terminal ① and starter motor lead ② with a jumper lead ③.

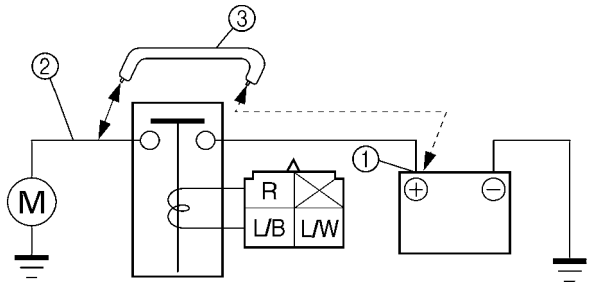


**WARNING**
- **A wire that is used as a jumper lead must have at least the same capacity or more as that of the battery lead, otherwise the jumper lead may burn.**
- **This check is likely to produce sparks, therefore make sure nothing flammable is in the vicinity.**

- Does the starter motor turn?

YES → NO → Repair or replace the starter motor.

EBS01054

4. Starter relay

- Remove the starter relay from the wire harness.
- Connect the pocket tester (Ω × 1) and battery (12 V) to the starter relay as shown.

**Positive battery terminal → blue/white ①**
**Negative battery terminal → blue/black ②**

**Positive tester probe → red ③**
**Negative tester probe → red ④**

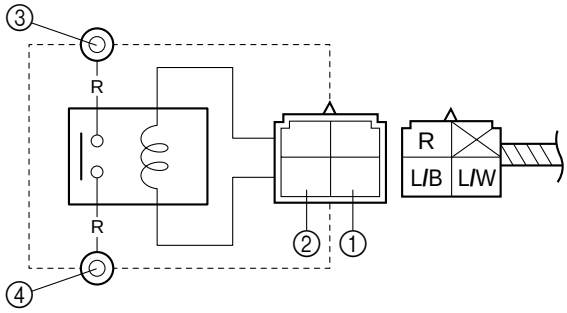


- Does the starter relay have continuity between red and red?

YES → NO → Replace the starter relay.

EBS01041

5. Main switch

- Check the main switch for continuity. Refer to “CHECKING THE SWITCHES”.
- Is the main switch OK?

YES → NO → Replace the main switch.

EBS01042

6. Engine stop switch

- Check the engine stop switch for continuity. Refer to “CHECKING THE SWITCHES”.
- Is the engine stop switch OK?

YES → NO → Replace the left handlebar switch.

EBS01057

7. Start switch

- Check the start switch for continuity. Refer to “CHECKING THE SWITCHES”.
- Is the start switch OK?

YES → NO → Replace the left handlebar switch.

| 8. Rear brake lever light switch |
|---|
| • Check the rear brake lever light switch for continuity.<br>Refer to “CHECKING THE SWITCHES”.<br>• Is the rear brake lever light switch OK? |

YES

NO

Replace the rear brake lever light switch.

EBS01058

| 9. Gear position switch |
|---|
| • Check the gear position switch for continuity.<br>Refer to “CHECKING THE SWITCHES”.<br>• Is the gear position switch OK? |

YES

NO

Replace the gear position switch.

EBS01059

| 10.Wiring |
|---|
| • Check the entire starting system’s wiring.<br>Refer to “CIRCUIT DIAGRAM”.<br>• Is the starting system’s wiring properly connected and without defects? |

YES

NO

The starting system circuit is OK.

Properly connect or repair the starting system’s wiring.

EBS01061

# STARTER MOTOR

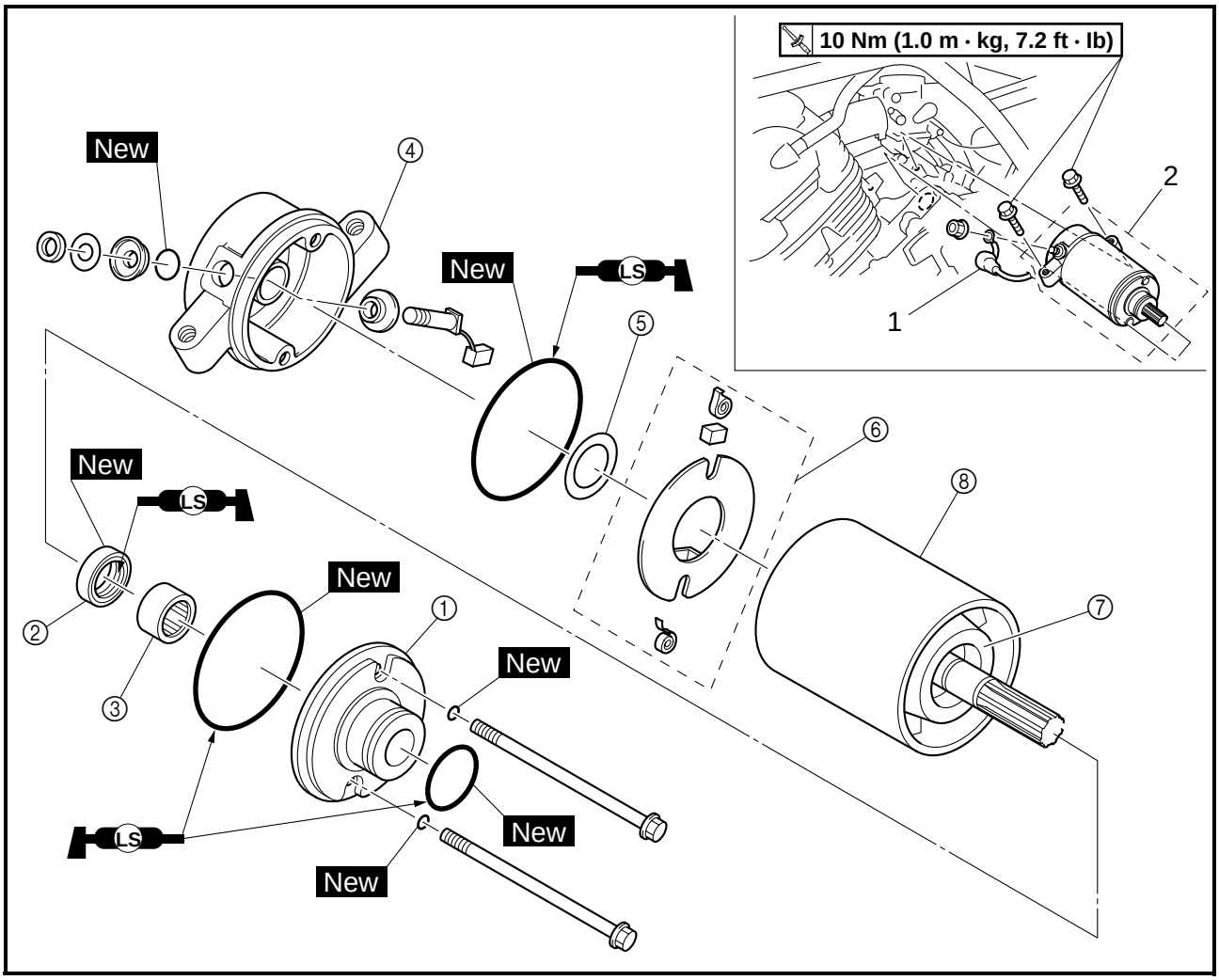


| Order | Job/Part | Q'ty | Remarks |
|---|---|---|---|
| | **Removing the starter motor** | | Remove the parts in the order listed. |
| 1 | Starter motor lead | 1 | Disconnect. |
| 2 | Starter motor | 1 | |
| | | | For installation, reverse the removal procedure. |
| | **Disassembling the starter motor** | | Remove the parts in the order listed. |
| ① | Starter motor front cover | 1 | |
| ② | Oil seal | 1 | |
| ③ | Bearing | 1 | |
| ④ | Starter motor rear cover | 1 | |
| ⑤ | Shim | 1 | |
| ⑥ | Brush holder set | 1 | |
| ⑦ | Armature assembly | 1 | |
| ⑧ | Starter motor yoke | 1 | |
| | | | For assembly, reverse the disassembly procedure. |

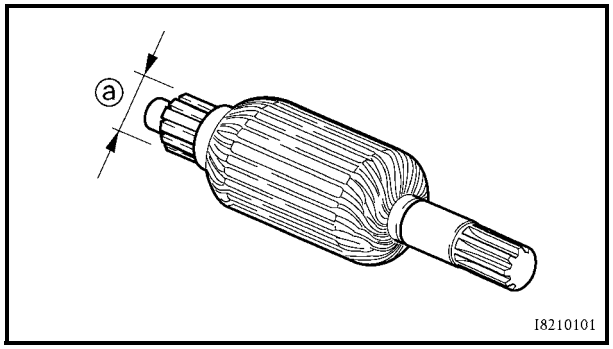


EBS01064

## CHECKING THE STARTER MOTOR

1. Check:
   - commutator
     Dirt → Clean with 600-grit sandpaper.
2. Measure:
   - commutator diameter ⓐ
     Out of specification → Replace the starter motor.

| | |
|---|---|
| | **Commutator wear limit**<br>**27 mm (1.06 in)** |

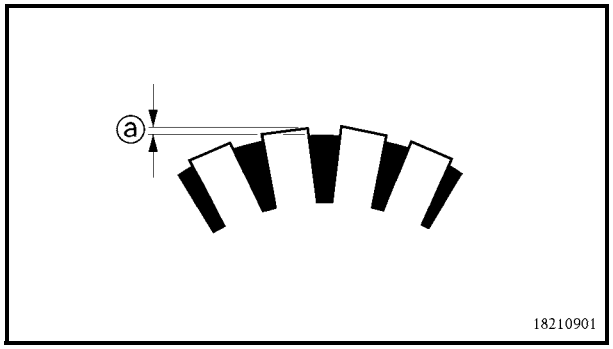


3. Measure:
   - mica undercut ⓐ
     Out of specification → Scrape the mica to the proper measurement with a hacksaw blade that has been grounded to fit the commutator.

| | |
|---|---|
| | **Mica undercut**<br>**0.60 mm (0.02 in)** |

**NOTE:**
The mica of the commutator must be undercut to ensure proper operation of the commutator.

4. Measure:
   - armature assembly resistances (commutator and insulation)
     Out of specification → Replace the starter motor.

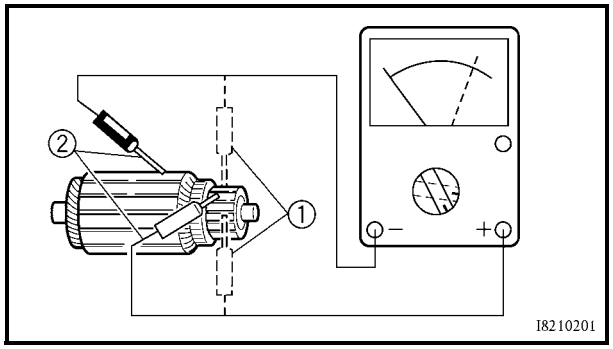


▼▼▼▼▼▼▼▼▼▼▼▼▼▼▼▼▼▼▼▼▼▼▼▼▼▼▼▼▼▼▼▼▼▼

a. Measure the armature assembly resistances with the pocket tester.

**Pocket tester**
**90890-03112**
**Analog pocket tester**
**YU-03112-C**

**Armature coil**
**Commutator resistance ①**
**0.012 ~ 0.013 Ω at 20 °C (68 °F)**
**Insulation resistance ②**
**Above 1 MΩ at 20 °C (68 °F)**

b. If any resistance is out of specification, replace the starter motor.

▲▲▲▲▲▲▲▲▲▲▲▲▲▲▲▲▲▲▲▲▲▲▲▲▲▲▲▲▲▲▲▲▲▲

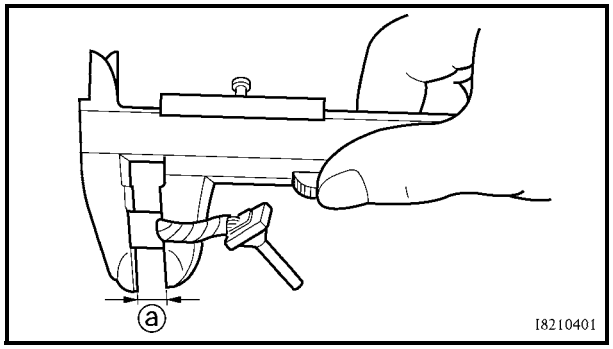


5. Measure:
   - brush length ⓐ
     Out of specification → Replace the brushes as a set.

**Brush length wear limit**
**8.5 mm (0.33 in)**

6. Measure:
   - brush spring force
     Out of specification → Replace the brush springs as a set.

**Brush spring force**
**6.38 ~ 9.32 N**
**(651 ~ 950 gf, 23.0 ~ 33.5 oz)**

7. Check:
   - gear teeth
     Damage/wear → Replace the gear.
8. Check:
   - bearing
   - oil seal
     Damage/wear → Replace the defective part(s).

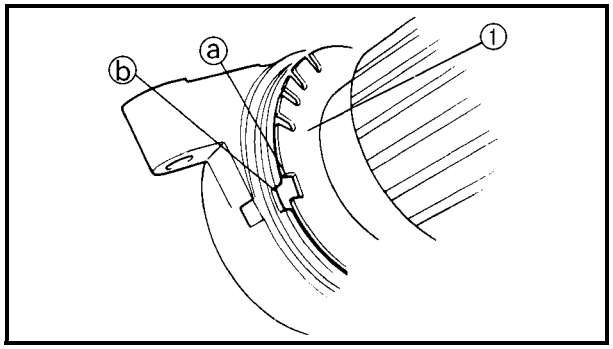


EBS00515

## ASSEMBLING THE STARTER MOTOR

1. Install:
   - brush seat ①

**NOTE:**

Align the projection ⓐ on the brush holder set with the slot ⓑ in the starter motor yoke.

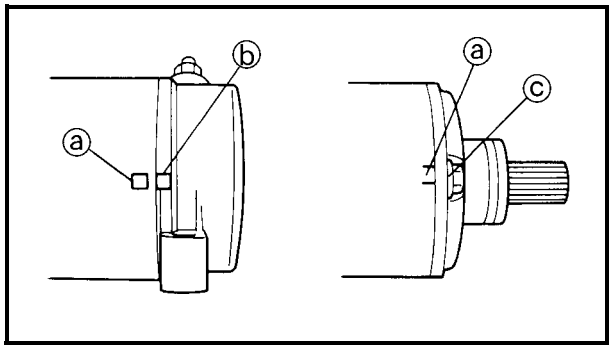


2. Install:
   - starter motor yoke
   - starter motor front cover
   - starter motor rear cover

**NOTE:**

Align the match marks ⓐ on the starter motor yoke with the match mark ⓑ and bolt hole ⓒ on the starter motor front and rear covers.

EBS00516

# CHARGING SYSTEM

## CIRCUIT DIAGRAM

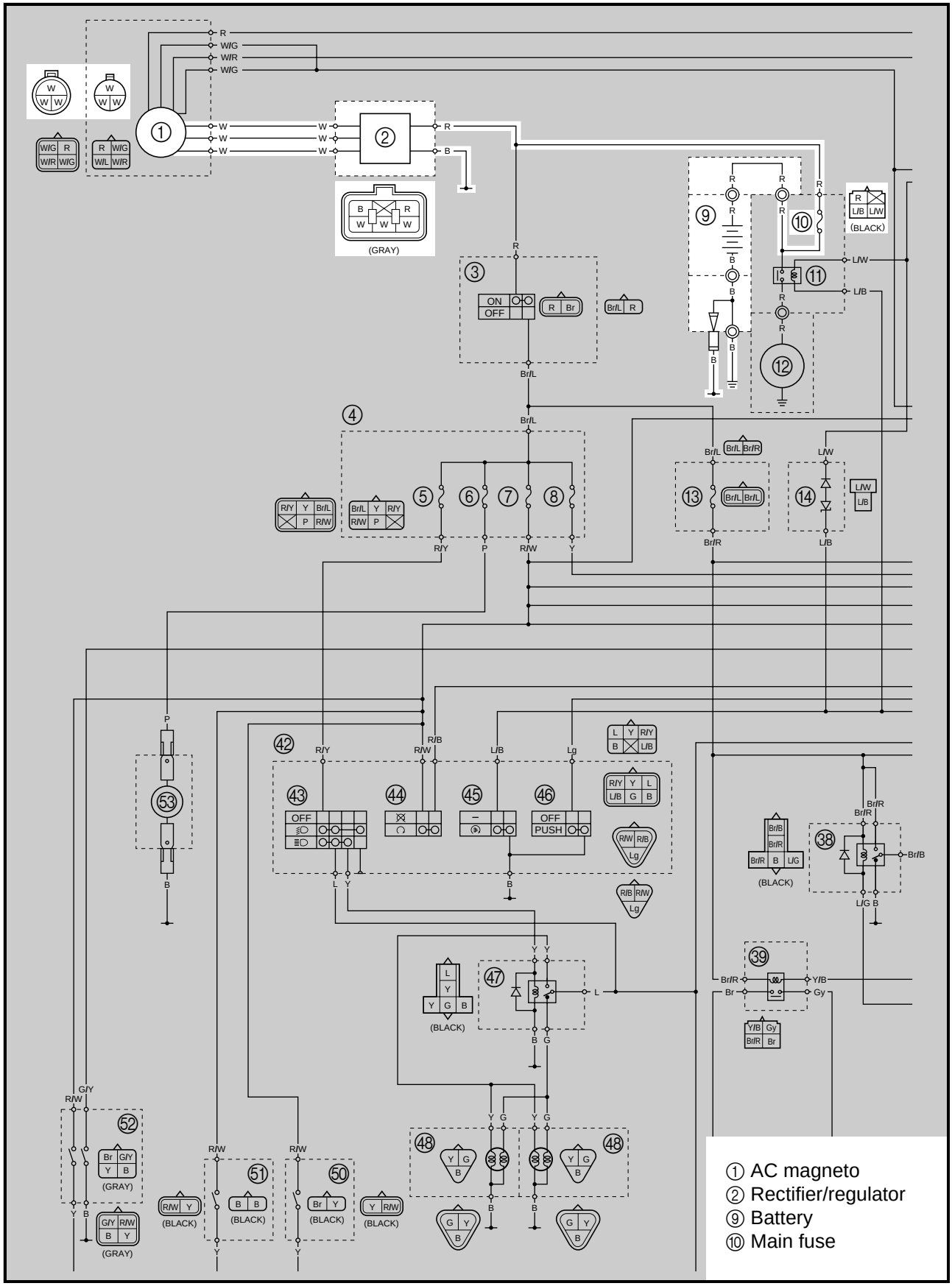

EBS01065

## TROUBLESHOOTING

**The battery is not being charged.**

Check:
1. main fuse
2. battery
3. charging voltage
4. stator coil resistance
5. wiring connections
   (of the entire charging system)

**NOTE:**
- Before troubleshooting, remove the following part(s):
1. seat
2. rear fender
- Troubleshoot with the following special tool(s).

**Pocket tester**
**90890-03112**
**Analog pocket tester**
**YU-03112-C**

EBS01043

1. Main fuse
   - Check the main fuse for continuity.
     Refer to "CHECKING THE FUSES" in chapter 3.
   - Is the main fuse OK?

YES → NO → Replace the main fuse.

EBS01044

2. Battery
   - Check the condition of the battery.
     Refer to "CHECKING AND CHARGING THE BATTERY" in chapter 3.

**Minimum open-circuit voltage**
**12.8 V or more at 20 °C (68 °F)**

- Is the battery OK?

YES → NO →
- Clean the battery terminals.
- Recharge or replace the battery.

EBS01066

3. Charging voltage

- Connect the engine tachometer to the spark plug lead.
- Connect the pocket tester (DC 20 V) to the battery as shown.

**Positive tester probe →**
**positive battery terminal ①**
**Negative tester probe →**
**negative battery terminal ②**

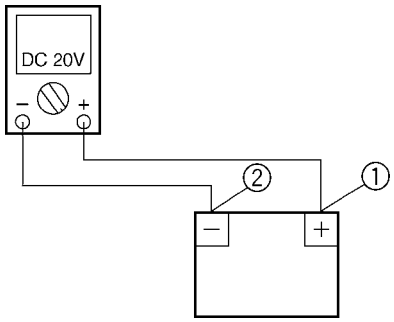


- Start the engine and let it run at approximately 3,000 r/min.
- Measure the charging voltage.

**Charging voltage**
**14 V at 3,000 r/min**

**NOTE:**
Make sure the battery is fully charged.

- Is the charging voltage within specification?

NO → The charging circuit is OK.

YES → 4. Stator coil resistance

EBS01100

4. Stator coil resistance

- Disconnect the AC magneto coupler from the wire harness.
- Connect the pocket tester (Ω × 1) to the stator coils.

**Positive tester probe → white terminal ①**
**Negative tester probe → white terminal ②**

**Positive tester probe → white terminal ①**
**Negative tester probe → white terminal ③**

**Positive tester probe → white terminal ②**
**Negative tester probe → white terminal ③**

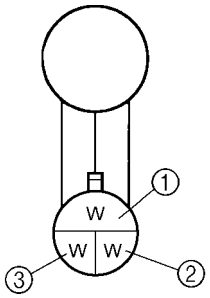


- Measure the stator coil resistance.

**Stator coil resistance**
**0.70 ~ 0.86 Ω at 20 °C (68 °F)**

YES → 5. Wiring

NO → Replace the pickup coil/stator assembly.

5. Wiring

- Check the entire charging system's wiring. Refer to "CIRCUIT DIAGRAM".
- Is the charging system's wiring properly connected and without defects?

YES → Replace the rectifier/regulator.

NO → Properly connect or repair the charging system's wiring.

EBS00518

# LIGHTING SYSTEM

## CIRCUIT DIAGRAM

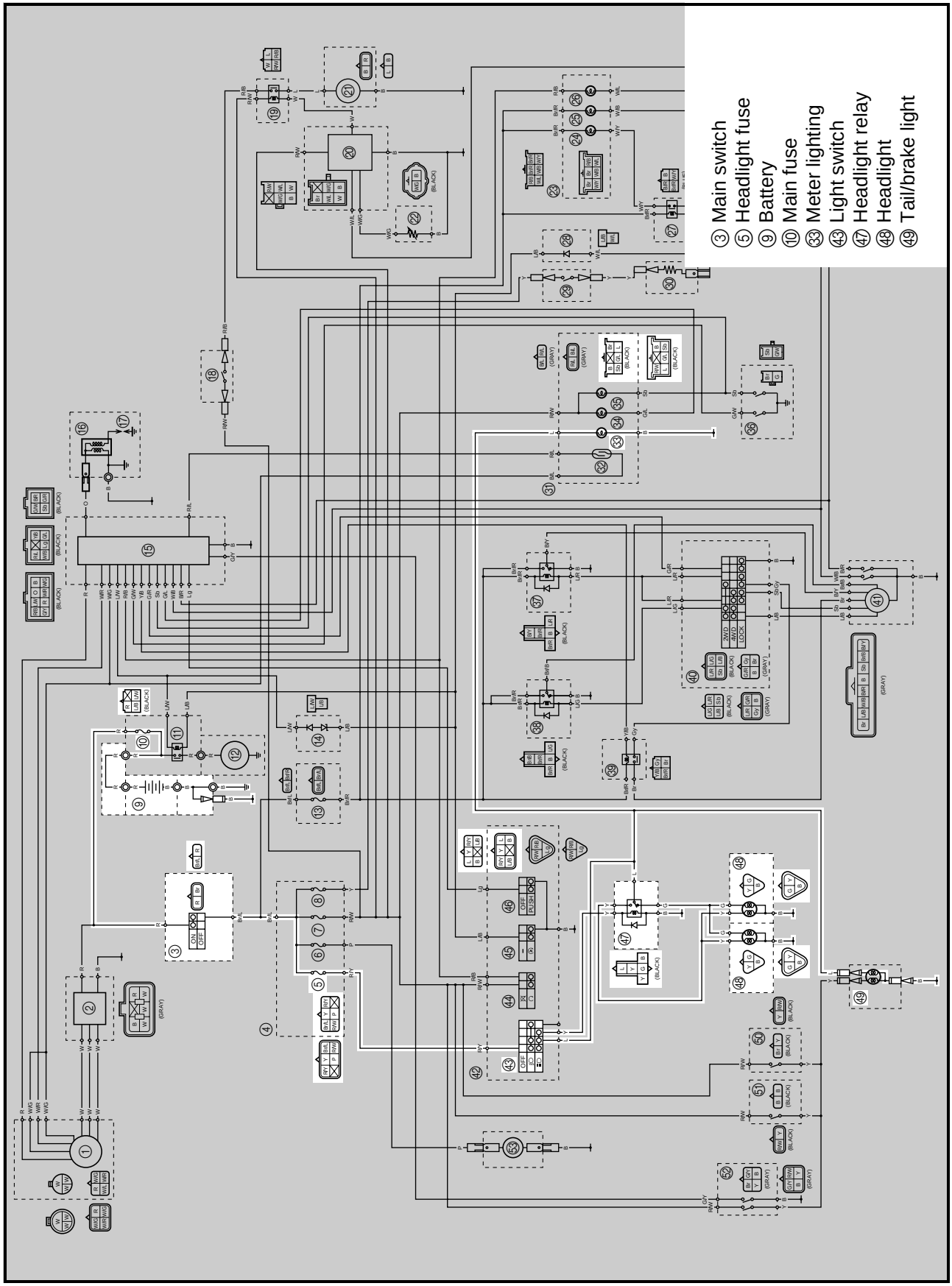

EBS01067

## TROUBLESHOOTING

**Any of the following fail to light: headlight, tail/brake light.**

Check:
1. main and headlight fuses
2. battery
3. main switch
4. light switch
5. wiring connections
   (of the entire lighting system)

**NOTE:**
- Before troubleshooting, remove the following part(s):
1. seat
2. front fender
3. rear fender
- Troubleshoot with the following special tool(s).

**Pocket tester**
**90890-03112**
**Analog pocket tester**
**YU-03112-C**

EBS01043

1. Main and headlight fuses
   - Check the main and headlight fuses for continuity.
     Refer to "CHECKING THE FUSES" in chapter 3.
   - Are the main and headlight fuses OK?

YES → NO → Replace the fuse(s).

EBS01044

2. Battery
   - Check the condition of the battery.
     Refer to "CHECKING AND CHARGING THE BATTERY" in chapter 3.

**Minimum open-circuit voltage**
**12.8 V or more at 20 °C (68 °F)**

- Is the battery OK?

YES → NO →
- Clean the battery terminals.
- Recharge or replace the battery.

EBS01041

3. Main switch
   - Check the main switch for continuity.
     Refer to "CHECKING THE SWITCHES".
   - Is the main switch OK?

YES → NO → Replace the main switch.

EBS01068

4. Light switch
   - Check the light switch for continuity.
     Refer to "CHECKING THE SWITCHES".
   - Is the light switch OK?

YES → NO → Replace the left handlebar switch.

EBS01069

| 5. Wiring |
|---|
| • Check the entire lighting system's wiring. Refer to "CIRCUIT DIAGRAM".<br>• Is the lighting system wiring properly connected and without defects? |

YES → Check the condition of each of the lighting system circuits. Refer to "CHECKING THE LIGHTING SYSTEM".

NO → Properly connect or repair the lighting system's wiring.

EBS01070

## CHECKING THE LIGHTING SYSTEM

1. The headlights fail to come on.

| 1. Headlight bulb and socket |
|---|
| • Check the headlight bulb and socket for continuity.<br>Refer to "CHECKING THE BULBS AND BULB SOCKETS".<br>• Are the headlight bulb and socket OK? |

YES → 

NO → Replace the headlight bulb, socket or both.

| 2. Headlight relay |
|---|
| • Remove the headlight relay.<br>• Connect the pocket tester (Ω × 1) and battery (12 V) to the headlight relay as shown. |
| A high beam<br>B low beam |
| **Positive battery terminal → yellow ①**<br>**Negative battery terminal → black ②** |
| **Positive tester probe → blue ③**<br>**Negative tester probe → yellow ④ or green ⑤** |

A

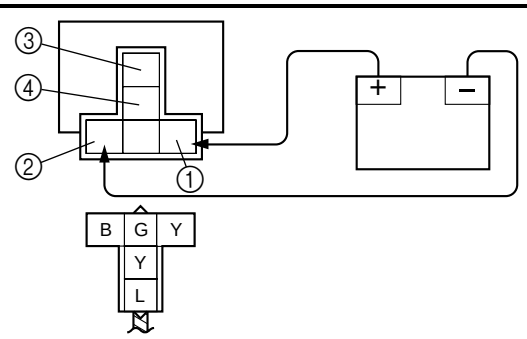


B

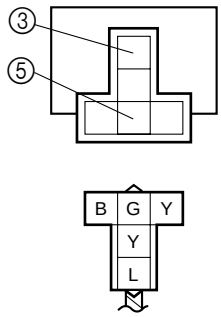


| |
|---|
| • Does the headlight relay have continuity between blue and yellow? A<br>• Does the headlight relay have continuity between blue and green? B |

YES → 

NO → Replace the headlight relay.

3. Voltage

- Connect the pocket tester (DC 20 V) to the headlight couplers as shown.

A When the light switch is set to “LO”
B When the light switch is set to “HI”

Headlight coupler (wire harness side)

**Headlight**
**Positive tester probe →**
**yellow ① or green ②**
**Negative tester probe → black ③**

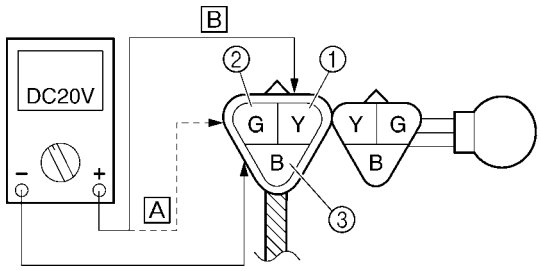


- Set the main switch to “ON”.
- Set the light switch to “LO” or “HI”.
- Measure the voltage (DC 12 V) of yellow ① or green ② on the headlight coupler (wire harness side).
- Is the voltage within specification?

YES → This circuit is OK.

NO → The wiring circuit from the main switch to the headlight coupler is faulty and must be repaired.

2. The meter lighting fails to come on.

1. Meter lighting bulb and socket

- Check the meter lighting bulb and socket for continuity.
  Refer to “CHECKING THE BULBS AND BULB SOCKETS”.
- Are the meter lighting bulb and socket OK?

YES →

NO → Replace the meter lighting bulb, socket or both.

2. Voltage

- Connect the pocket tester (DC 20 V) to the speedometer assembly coupler (wire harness side) as shown.

**Positive tester probe → blue ①**
**Negative tester probe → black ②**

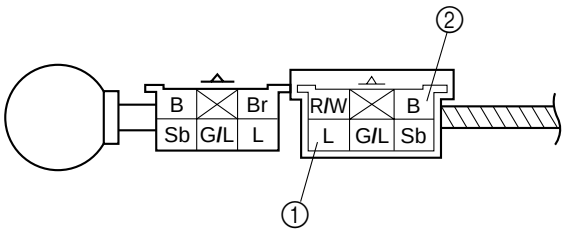


- Set the main switch to "ON".
- Measure the voltage (DC 12 V) of blue ① on the speedometer assembly coupler (wire harness side).
- Is the voltage within specification?

YES → This circuit is OK.

NO → The wiring circuit from the main switch to the speedometer assembly coupler is faulty and must be repaired.

3. The taillight fails to come on.

1. Taillight bulb and socket

- Check the taillight bulb and socket for continuity.
  Refer to "CHECKING THE BULBS AND BULB SOCKETS".
- Are the taillight bulb and socket OK?

YES

NO → Replace the taillight bulb, socket or both.

2. Voltage

- Connect the pocket tester (DC 20 V) to the tail/brake light connectors as shown.

Tail/brake light connectors (wire harness side)

**Positive tester probe → blue ①**
**Negative tester probe → black ②**

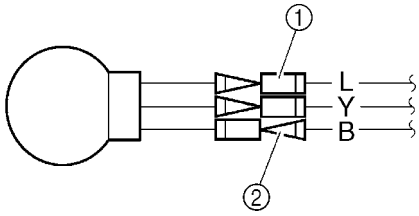


- Set the main switch to "ON".
- Set the light switch to "LO" or "HI".
- Measure the voltage (DC 12 V) of blue ① on the tail/brake light connectors (wire harness side).
- Is the voltage within specification?

YES → This circuit is OK.

NO → The wiring circuit from the main switch to the tail/brake light connectors is faulty and must be repaired.

EBS00521

# SIGNALING SYSTEM

## CIRCUIT DIAGRAM

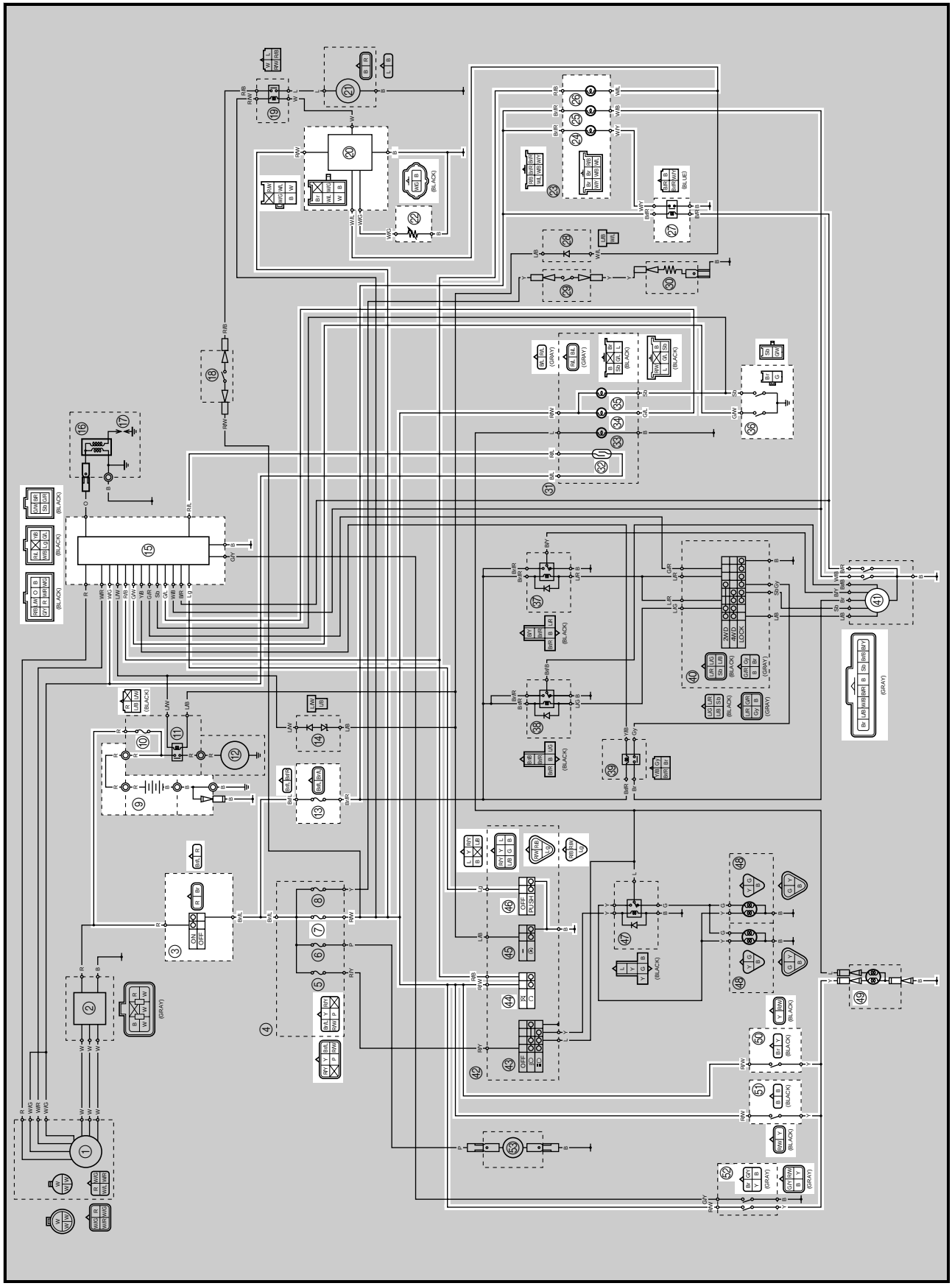

③ Main switch
⑦ Ignition fuse
⑨ Battery
⑩ Main fuse
⑬ Four-wheel-drive motor fuse
⑮ CDI unit
⑳ Oil cooler fan motor control unit
㉒ Oil temperature sensor
㉔ On-command four-wheel-drive indicator light
㉕ Differential gear lock indicator light
㉖ Oil temperature warning light
㉗ On-command four-wheel-drive indicator light relay
㉜ Speed sensor
㉞ Reverse indicator light
㉟ Neutral indicator light
㊱ Gear position switch
㊶ Differential gear motor
㊹ Engine stop switch
㊻ Override switch
㊾ Tail/brake light
㊿ Brake pedal light switch
(51) Front brake light switch
(52) Rear brake lever light switch

EBS01073

## TROUBLESHOOTING

**Any of the following fail to light: warning light, brake light or an indicator light.**

Check:
1. main, four-wheel-drive motor and ignition fuses
2. battery
3. main switch
4. Engine stop switch
5. wiring connections (of the entire signaling system)

**NOTE:**
- Before troubleshooting, remove the following part(s):
1. seat
2. front fender
3. rear fender
- Troubleshoot with the following special tool(s).

**Pocket tester**
**90890-03112**
**Analog pocket tester**
**YU-03112-C**

EBS01043

1. Main, four-wheel-drive motor and ignition fuses
   - Check the main, four-wheel-drive motor and ignition fuses for continuity.
     Refer to "CHECKING THE FUSES" in chapter 3.
   - Are the main, four-wheel-drive motor and ignition fuses OK?

YES → NO → Replace the fuse(s).

EBS01044

2. Battery
   - Check the condition of the battery.
     Refer to "CHECKING AND CHARGING THE BATTERY" in chapter 3.

**Minimum open-circuit voltage**
**12.8 V or more at 20 °C (68 °F)**

- Is the battery OK?

YES → NO →
- Clean the battery terminals.
- Recharge or replace the battery.

EBS01041

3. Main switch
   - Check the main switch for continuity.
     Refer to "CHECKING THE SWITCHES".
   - Is the main switch OK?

YES → NO → Replace the main switch.

EBS01042

4. Engine stop switch
   - Check the engine stop switch for continuity.
     Refer to "CHECKING THE SWITCHES".
   - Is the engine stop switch OK?

YES → NO → Replace the left handlebar switch.

EBS01074

5. Wiring

- Check the entire signaling system wiring. Refer to “CIRCUIT DIAGRAM”.
- Is the signaling system wiring properly connected and without defects?

YES → Check the condition of each of the signaling system circuits. Refer to “CHECKING THE SIGNALING SYSTEM”.

NO → Properly connect or repair the signaling system wiring.

EBS01075

## CHECKING THE SIGNALING SYSTEM

EBS01076

1. The brake light fails to come on.

1. Brake light bulb and bulb socket

- Check the brake light bulb and bulb socket for continuity.
  Refer to “CHECKING THE BULBS AND BULB SOCKETS”.
- Are the brake light bulb and bulb socket OK?

YES →

NO → Replace the brake light bulb, bulb socket or both.

2. Brake light switches

- Check the brake light switches for continuity.
  Refer to “CHECKING THE SWITCHES”.
- Are the brake light switches OK?

YES →

NO → Replace the brake light switch(es).

3. Voltage

- Connect the pocket tester (DC 20 V) to the tail/brake light connectors (wire harness side) as shown.

**Positive tester probe → yellow ①**
**Negative tester probe → black ②**

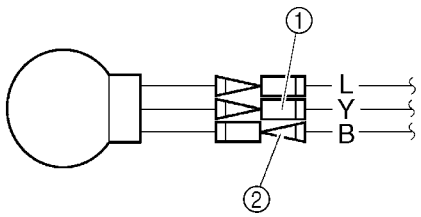


- Set the main switch to "ON".
- Pull in a brake lever or push down on the brake pedal.
- Measure the voltage (DC 12 V) of yellow ① on the tail/brake light connector (wire harness side).
- Is the voltage within specification?

YES → This circuit is OK.

NO → The wiring circuit from the main switch to the tail/brake light connector is faulty and must be repaired.

EBS01078

2. The neutral indicator light fails to come on.

1. Neutral indicator light bulb and socket

- Check the neutral indicator light bulb and socket for continuity.
  Refer to "CHECKING THE BULBS AND BULB SOCKETS".
- Are the neutral indicator light bulb and socket OK?

YES

NO → Replace the neutral indicator light bulb, socket or both.

2. Gear position switch

- Check the gear position switch for continuity.
  Refer to "CHECKING THE SWITCHES".
- Is the gear position switch OK?

YES

NO → Replace the gear position switch.

3. Voltage

- Connect the pocket tester (DC 20 V) to the speedometer assembly coupler as shown.

**Positive tester probe → red/white ①**
**Negative tester probe → sky blue ②**

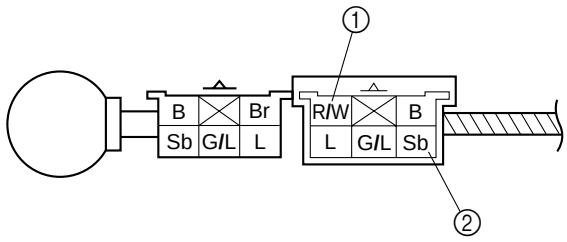


- Set the main switch to "ON".
- Measure the voltage (DC 12 V) of red/white ① and sky blue ② at the speedometer assembly coupler.
- Is the voltage within specification?

YES → This circuit is O.K.

NO → The wiring circuit from the main switch to the speedometer assembly coupler is faulty and must be repaired.

EBS01079

3. The reverse indicator light fails to come on.

1. Reverse indicator light bulb and socket

- Check the reverse indicator light bulb and socket for continuity.
  Refer to "CHECKING THE BULBS AND BULB SOCKETS".
- Are the reverse indicator light bulb and socket OK?

YES

NO → Replace the reverse indicator light bulb, socket or both.

2. Gear position switch

- Check the gear position switch for continuity.
  Refer to "CHECKING THE SWITCHES".
- Is the gear position switch OK?

YES

NO → Replace the gear position switch.

3. Voltage

- Connect the pocket tester (DC 20 V) to the speedometer assembly coupler as shown.

**Positive tester probe → red/white ①**
**Negative tester probe → green/blue ②**

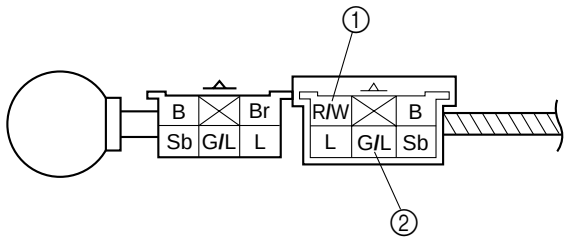


- Set the main switch to "ON".
- Measure the voltage (DC 12 V) of red/white ① and green/blue ② at the speedometer assembly coupler.
- Is the voltage within specification?

YES → Replace the CDI unit.

NO → The wiring circuit from the main switch to the speedometer assembly coupler is faulty and must be repaired.

EBS01081

4. The on-command four-wheel-drive indicator light fails to come on.

1. On-command four-wheel-drive indicator light bulb and socket

- Check the on-command four-wheel-drive indicator light bulb and socket for continuity.
  Refer to "CHECKING THE BULBS AND BULB SOCKETS".
- Are the on-command four-wheel-drive indicator light bulb and socket OK?

YES

NO → Replace the on-command four-wheel-drive indicator light bulb, socket or both.

2. On-command four-wheel-drive motor switch (differential gear motor)

- Check the on-command four-wheel-drive motor switch for continuity.
  Refer to "CHECKING THE SWITCHES".
- Is the on-command four-wheel-drive motor switch OK?

YES

NO → Replace the differential gear motor.

EBS01098

3. On-command four-wheel-drive indicator light relay

- Remove the on-command four-wheel-drive indicator light relay from the wire harness.
- Connect the pocket tester (Ω × 1) and the battery (12 V) to the on-command four-wheel-drive indicator light relay terminals.

**Positive battery terminal → brown/red ①**
**Negative battery terminal → black/red ②**

**Positive tester probe → white/yellow ③**
**Negative tester probe → black ④**

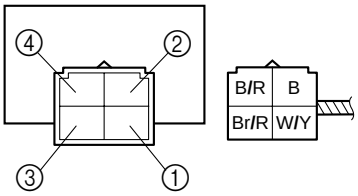


- Check the on-command four-wheel-drive indicator light relay for continuity.

YES → NO

Replace the on-command four-wheel-drive indicator light relay.

4. Voltage

- Connect the pocket tester (DC 20 V) to the indicator light assembly coupler as shown.

**Positive tester probe → brown/red ①**
**Negative tester probe → white/yellow ②**

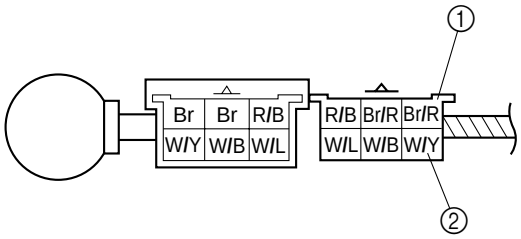


- Set the main switch to "ON".
- Measure the voltage (12 V) of brown/red ① and white/yellow ② at the indicator light assembly coupler.
- Is the voltage within specification?

YES → This circuit is O.K.

NO → The wiring circuit from the main switch to the indicator light assembly coupler is faulty and must be repaired.

EBS01081

5. The differential gear lock indicator light fails to come on.

1. Differential gear lock indicator light bulb and socket

- Check the differential gear lock indicator light bulb and socket for continuity.
  Refer to “CHECKING THE BULBS AND BULB SOCKETS”.
- Are the differential gear lock indicator light bulb and socket OK?

YES ⇩ NO ⬇

Replace the differential gear lock indicator light bulb, socket or both.

2. On-command four-wheel-drive motor switch (differential gear motor)

- Check the on-command four-wheel-drive motor switch for continuity.
  Refer to “CHECKING THE SWITCHES”.
- Is the on-command four-wheel-drive motor switch OK?

YES ⇩ NO ⬇

Replace the differential gear motor.

3. Voltage

- Connect the pocket tester (DC 20 V) to the indicator light assembly coupler as shown.

**Positive tester probe → brown/red ①**
**Negative tester probe → white/black ②**

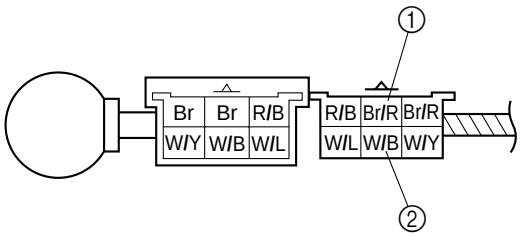


- Set the main switch to “ON”.
- Measure the voltage (12 V) of brown/red ① and white/black ② at the indicator light assembly coupler.
- Is the voltage within specification?

YES ⇩ NO ⬇

This circuit is O.K.

The wiring circuit from the main switch to the indicator light assembly coupler is faulty and must be repaired.

6. While the override switch is pushed, the reverse indicator light does not flash.

**1. Reverse indicator light bulb and socket**

- Check the reverse indicator light bulb and socket for continuity.
  Refer to “CHECKING THE BULBS AND BULB SOCKETS”.
- Are the reverse indicator light bulb and socket OK?

YES → NO → Replace the reverse indicator light bulb, socket or both.

**2. Override switch**

- Check the override switch for continuity.
  Refer to “CHECKING THE SWITCHES”.
- Is the override switch OK?

YES → NO → Replace the left handlebar switch.

**3. Voltage**

- Connect the pocket tester (DC 20 V) to the speedometer assembly coupler as shown.

**Positive tester probe → red/white ①**
**Negative tester probe → green/blue ②**

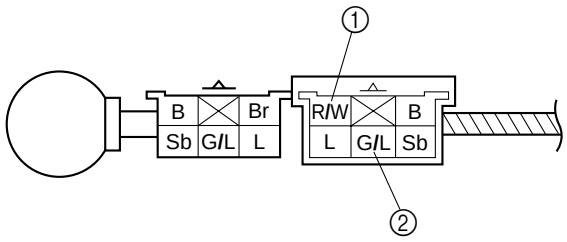


- Set the main switch to “ON”.
- Measure the voltage (DC 12 V) of red/white ① and green/blue ② at the speedometer assembly coupler.
- Is the voltage within specification?

YES → Replace the CDI unit.

NO → The wiring circuit from the main switch to the speedometer assembly coupler is faulty and must be repaired.

EBS01083

7. The oil temperature warning light does not come on when the main switch is set to “ON”, or if the oil temperature warning light does not come on when the temperature is high (more than 147.5 ~ 162.5 °C (297.5 ~ 324.5 °F)).

1. Oil temperature warning light bulb and socket

- Check the oil temperature warning light bulb and socket for continuity.
  Refer to “CHECKING THE BULBS AND BULB SOCKETS”.
- Are the oil temperature warning light bulb and socket OK?

YES

NO

Replace the oil temperature warning light bulb, socket or both.

2. Oil temperature sensor resistance

- Remove the oil temperature sensor from the crankcase.
- Connect the pocket tester (Ω × 100) to the oil temperature sensor terminal as shown.
- Immerse the oil temperature sensor ① in a container filled with engine oil ②.

**NOTE:**

Make sure that the oil temperature sensor terminals do not get wet.

- Place a thermometer ③ in the engine oil.
- Slowly heat the engine oil, then let it cool down to the specified temperature.

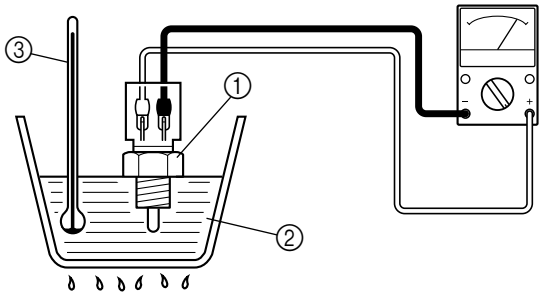


- Measure the oil temperature sensor resistance.

**Oil temperature sensor resistance**
**307 ~ 339 Ω at 150 °C (302 °F)**
**209 ~ 231 Ω at 170 °C (338 °F)**

**WARNING**

- **Handle the oil temperature sensor with special care.**
- **Never subject the oil temperature sensor to strong shocks. If the oil temperature sensor is dropped, replace it.**

**Oil temperature sensor**
**20 Nm (2.0 m · kg, 14 ft · lb)**

- Does the oil temperature sensor operate properly?

YES

NO

Replace the oil temperature sensor.

3. Voltage

- Connect the pocket tester (DC 20 V) to the indicator light assembly coupler as shown.

**Positive tester probe → red/black ①**
**Negative tester probe → white/blue ②**

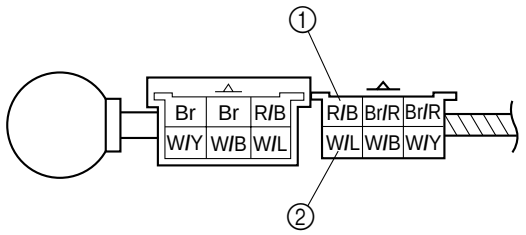


- Set the main switch to "ON".
- Measure the voltage (12 V) of red/black ① and white/blue ② at the indicator light assembly coupler.
- Is the voltage within specification?

YES → Replace the oil cooler fan motor control unit.

NO → The wiring circuit from the main switch to the indicator light assembly coupler is faulty and must be repaired.

8. The reverse indicator light flashes under circumstances other than those listed below.
- While the override switch is being pushed.
- When the engine is raced for 10 seconds or more.

1. Speed sensor

- Connect the pocket tester (DC 20 V) to the speed sensor coupler (wire harness side) as shown.

**Positive tester probe → red/blue ①**
**Negative tester probe → black/blue ②**

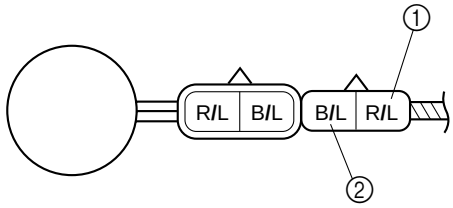


- Turn the main switch to "ON".
- Elevate the rear wheels and slowly rotate them.
- Measure the voltage of red/blue and black/blue. With each full rotation of the rear wheels, the voltage reading should cycle from 0.6 V to 4.8 V to 0.6 V to 4.8 V.
- Is the speed sensor OK?

YES → Replace the CDI unit.

NO → Replace the speedometer assembly.

EBS00532

# COOLING SYSTEM

## CIRCUIT DIAGRAM

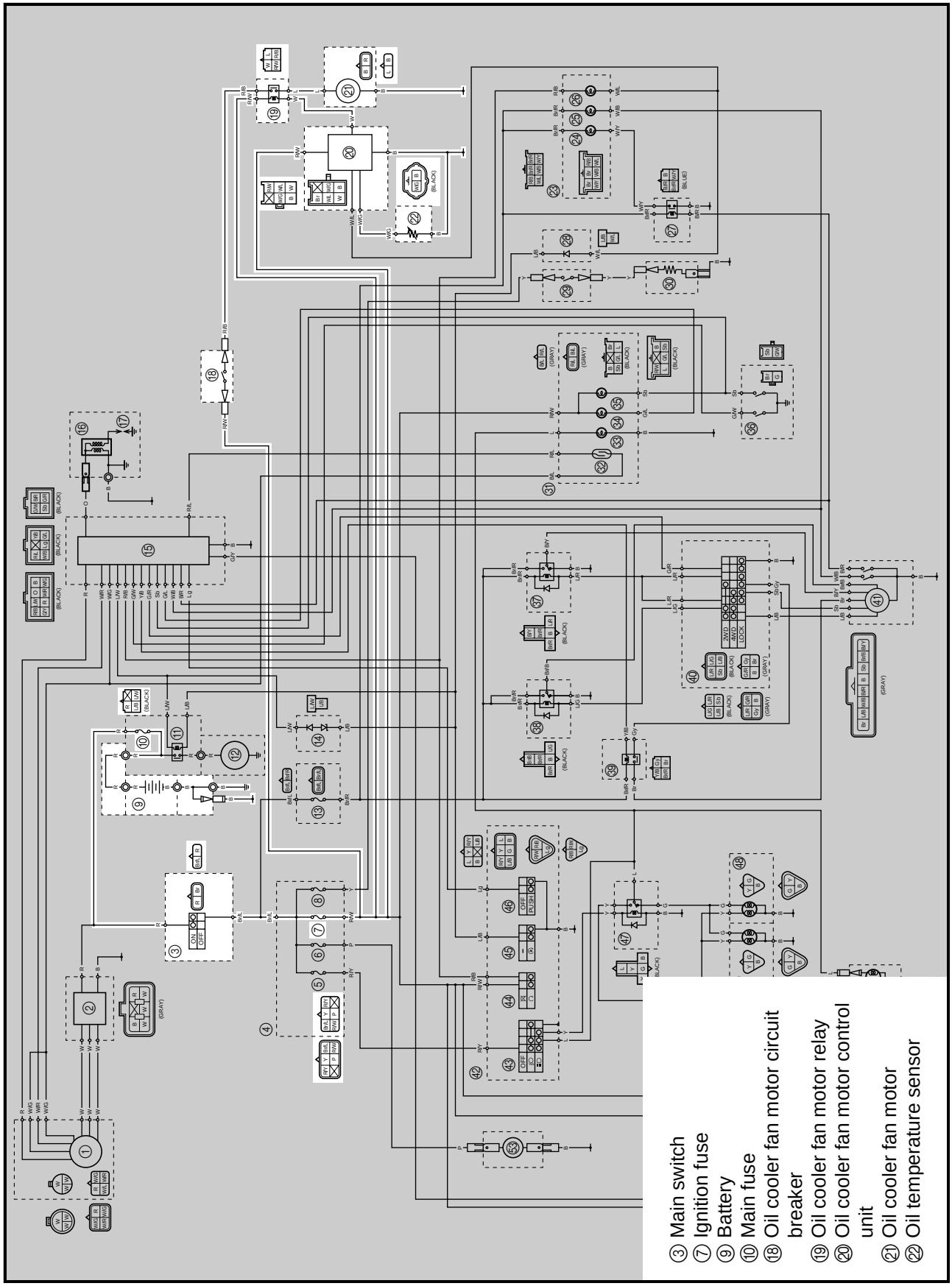

EBS01085

## TROUBLESHOOTING

**The oil cooler fan motor fails to turn.**

Check:
1. main and ignition fuses
2. battery
3. main switch
4. oil cooler fan motor
5. oil cooler fan motor relay
6. oil cooler fan motor circuit breaker
7. oil temperature sensor resistance
8. wiring connections
   (of the entire cooling system)

**NOTE:**
- Before troubleshooting, remove the following part(s):
1. seat
2. front fender
3. rear fender
- Troubleshoot with the following special tool(s).

**Pocket tester**
**90890-03112**
**Analog pocket tester**
**YU-03112-C**

EBS01043

1. Main and ignition fuses
   - Check the main and ignition fuses for continuity.
     Refer to "CHECKING THE FUSES" in chapter 3.
   - Are the main and ignition fuses OK?

YES → NO → Replace the fuse(s).

EBS01044

2. Battery
   - Check the condition of the battery.
     Refer to "CHECKING AND CHARGING THE BATTERY" in chapter 3.

**Minimum open-circuit voltage**
**12.8 V or more at 20 °C (68 °F)**

- Is the battery OK?

YES → NO →
- Clean the battery terminals.
- Recharge or replace the battery.

EBS01041

3. Main switch
   - Check the main switch for continuity.
     Refer to "CHECKING THE SWITCHES".
   - Is the main switch OK?

YES → NO → Replace the main switch.

EBS01086

4. Oil cooler fan motor

- Disconnect the oil cooler fan motor coupler from the wire harness.
- Connect the battery (12 V) as shown.

**Positive battery lead → red ①**
**Negative battery lead → black ②**

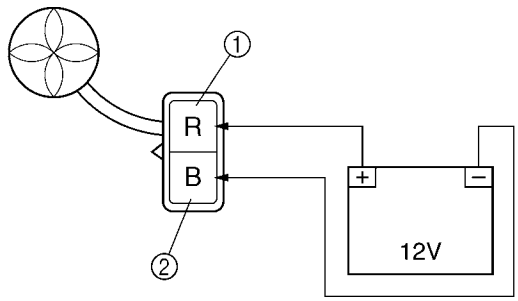


- Does the oil cooler fan motor turn?

YES

NO

The oil cooler fan motor is faulty and must be replaced.

5. Oil cooler fan motor relay

- Remove the oil cooler fan motor relay from the wire harness.
- Connect the pocket tester (Ω × 1) and battery (12 V) to the oil cooler fan motor relay terminal as shown.
- Check the oil cooler fan motor relay of continuity.

**Positive battery lead → red/white ①**
**Negative battery lead → white ②**

**Positive tester probe → red/black ③**
**Negative tester probe → blue ④**

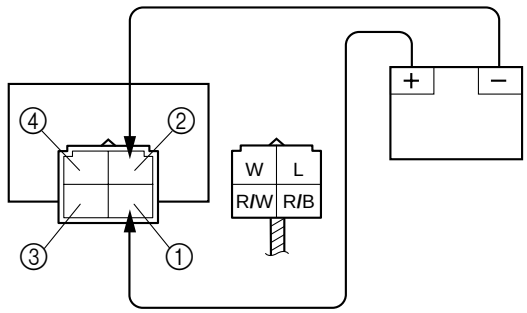


- Does the oil cooler fan motor relay have continuity between red/black and blue?

YES

NO

The oil cooler fan motor relay is faulty and must be replaced.

6. Oil cooler fan motor circuit breaker

- Remove the oil cooler fan motor circuit breaker from the wire harness.

**NOTE:**
The oil cooler fan motor circuit breaker is attached to the wire harness with black tape near the tail/brake light connectors.

- Connect the pocket tester (Ω × 1) to the oil cooler fan motor circuit breaker.

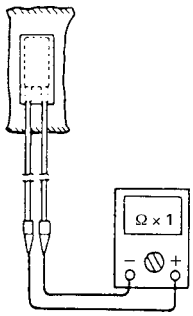


**Oil cooler fan motor circuit breaker resistance**
**Zero Ω at 20 °C (68 °F)**

YES

NO

Replace the oil cooler fan motor circuit breaker.

EBS00812

7. Oil temperature sensor resistance

- Remove the oil temperature sensor from the crankcase.
- Connect the pocket tester (Ω × 100) to the oil temperature sensor terminal as shown.
- Immerse the oil temperature sensor ① in a container filled with engine oil ②.

**NOTE:**
Make sure that the oil temperature sensor terminals do not get wet.

- Place a thermometer ③ in the engine oil.
- Slowly heat the engine oil, then let it cool down to the specified temperature.

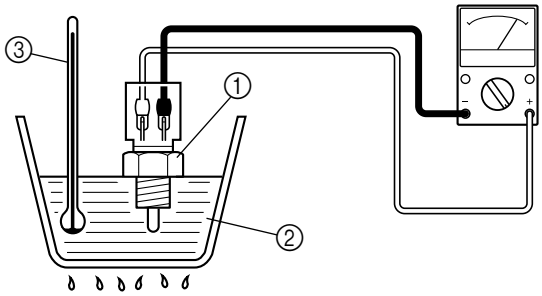


- Measure the oil temperature sensor resistance.

**Oil temperature sensor resistance**
**307 ~ 339 Ω at 150 °C (302 °F)**
**209 ~ 231 Ω at 170 °C (338 °F)**

**WARNING**

- **Handle the oil temperature sensor with special care.**
- **Never subject the oil temperature sensor to strong shocks. If the oil temperature sensor is dropped, replace it.**

**Oil temperature sensor**
**20 Nm (2.0 m · kg, 14 ft · lb)**

- Does the oil temperature sensor operate properly?

YES

NO

Replace the oil temperature sensor.

EBS01090

| 8. Wiring |
| --- |
| • Check the entire cooling system wiring. Refer to “CIRCUIT DIAGRAM”.<br>• Is the cooling system wiring properly connected and without defects? |

YES

Replace the oil cooler fan motor control unit.

NO

Properly connect or repair the cooling system wiring.

EBS00535

# 2WD/4WD SELECTING SYSTEM

## CIRCUIT DIAGRAM

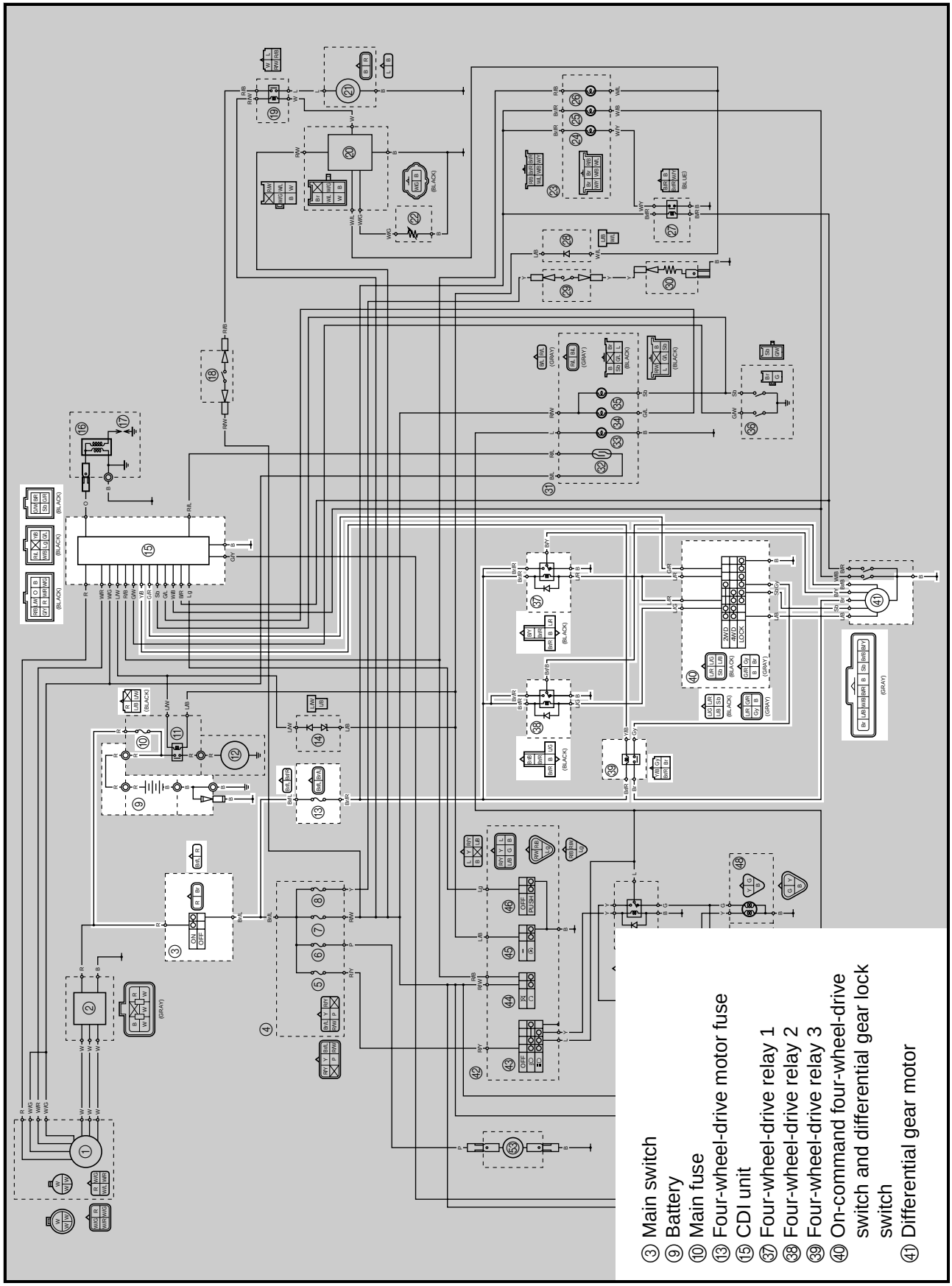

EBS01095

## TROUBLESHOOTING

**The four-wheel-drive motor indicator light fails to come on.**

Check:
1. main and four-wheel-drive motor fuses
2. battery
3. main switch
4. four-wheel-drive motor relay 1
5. four-wheel-drive motor relay 2
6. four-wheel-drive motor relay 3
7. on-command four-wheel-drive motor switch and differential gear lock switch
8. differential gear motor
9. wiring connection
   (the entire 2WD/4WD selecting system)

**NOTE:**
- Before troubleshooting, remove the following part(s):
1. seat
2. rear fender
- Troubleshoot with the following special tool(s).

**Pocket tester**
**90890-03112**
**Analog pocket tester**
**YU-03112-C**

EBS01043

1. Main and four-wheel-drive motor fuses
- Check the main and four-wheel-drive motor fuses for continuity.
  Refer to “CHECKING THE FUSES” in chapter 3.
- Are the main and four-wheel-drive motor fuses OK?

YES → NO → Replace the fuse(s).

EBS01044

2. Battery
- Check the condition of the battery.
  Refer to “CHECKING AND CHARGING THE BATTERY” in chapter 3.

**Minimum open-circuit voltage**
**12.8 V or more at 20 °C (68 °F)**

- Is the battery OK?

YES → NO →
- Clean the battery terminals.
- Recharge or replace the battery.

EBS01041

3. Main switch
- Check the main switch for continuity.
  Refer to “CHECKING THE SWITCHES”.
- Is the main switch OK?

YES → NO → Replace the main switch.

EBS01096

4. Four-wheel-drive motor relay 1

- Remove the four-wheel-drive motor relay 1 from the wire harness.
- Connect the pocket tester (Ω × 1) and the battery (12 V) to the four-wheel-drive motor relay 1 terminals.

**Positive tester probe → black/yellow ①**
**Negative tester probe → black ②**

**Positive battery terminal → brown/red ③**
**Negative battery terminal → blue/red ④**

**Positive tester probe → black/yellow ①**
**Negative tester probe → brown/red ⑤**

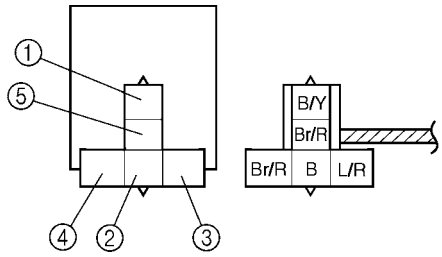


- Check the four-wheel-drive motor relay 1 for continuity.

YES → NO → Replace the four-wheel-drive motor relay 1.

EBS01097

5. Four-wheel-drive motor relay 2

- Remove the four-wheel-drive motor relay 2 from the wire harness.
- Connect the pocket tester (Ω × 1) and the battery (12 V) to the four-wheel-drive motor relay 2 terminals.

**Positive tester probe → brown/black ①**
**Negative tester probe → black ②**

**Positive battery terminal → brown/red ③**
**Negative battery terminal → blue/green ④**

**Positive tester probe → brown/black ①**
**Negative tester probe → brown/red ⑤**

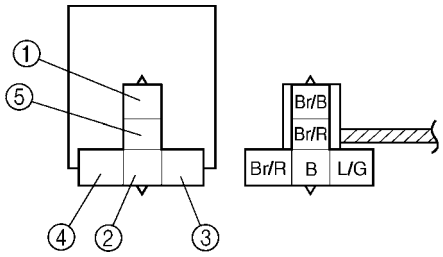


- Check the four-wheel-drive motor relay 2 for continuity.

YES → NO → Replace the four-wheel-drive motor relay 2.

EBS01098

6. Four-wheel-drive motor relay 3

- Remove the four-wheel-drive motor relay 3 from the wire harness.
- Connect the pocket tester (Ω × 1) and the battery (12 V) to the four-wheel-drive motor relay 3 terminals.

**Positive battery terminal → brown/red ①**
**Negative battery terminal → yellow/black ②**

**Positive tester probe → brown ③**
**Negative tester probe → gray ④**

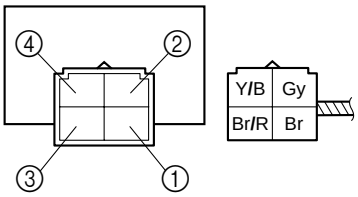


- Check the four-wheel-drive motor relay 3 for continuity.

YES

NO

Replace the four-wheel-drive motor relay 3.

EBS01092

7. On-command four-wheel-drive motor switch and differential gear lock switch

- Check the on-command four-wheel-drive motor switch and differential gear lock switch for continuity.
  Refer to “CHECKING THE SWITCHES”.
- Is the on-command four-wheel-drive motor switch and differential gear lock switch OK?

YES

NO

Replace the on-command four-wheel-drive motor switch and differential gear lock switch.

8. Differential gear motor

- Disconnect the differential gear motor coupler.
- Remove the differential gear motor from the differential gear case.
  Refer to “FRONT CONSTANT VELOCITY JOINTS AND DIFFERENTIAL GEAR” in chapter 6.
- Connect two C size batteries to the differential gear motor terminals ① (as shown illustrations).

A Check that the pinion gear ② turns counterclockwise.
B Check that the pinion gear ② turns clockwise.

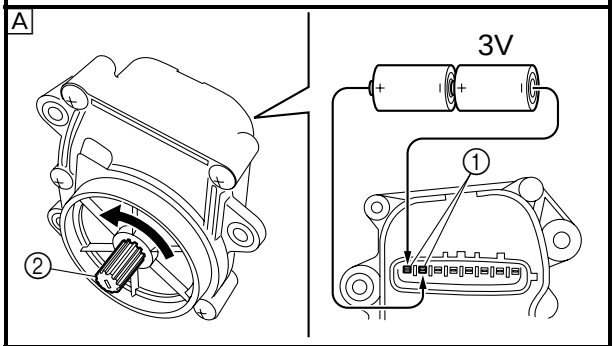


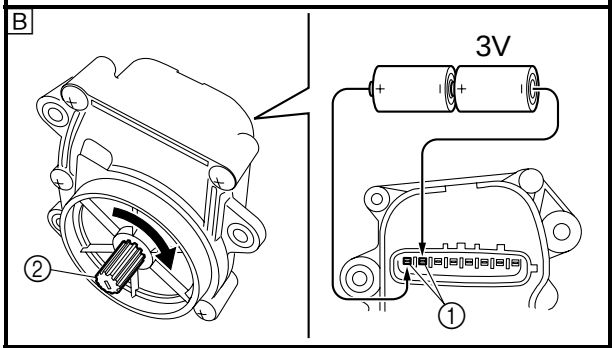


- Make sure that the drive gear (shift fork sliding gear) operates correctly.

**NOTE:**
When installing the differential gear motor, refer to “FRONT CONSTANT VELOCITY JOINTS AND DIFFERENTIAL GEAR” in chapter 6.

YES → NO → Replace the differential gear motor.

EBS01094

9. Wiring connection

- Check the connections of the entire 2WD/4WD selecting system.
  Refer to “CIRCUIT DIAGRAM”.
- Is the 2WD/4WD system wiring properly connected and without defects?

YES → Replace the CDI unit.

NO → Properly connect or repair the 2WD/4WD selecting system wiring.

EBS00518

# CARBURETOR WARMING SYSTEM

## CIRCUIT DIAGRAM

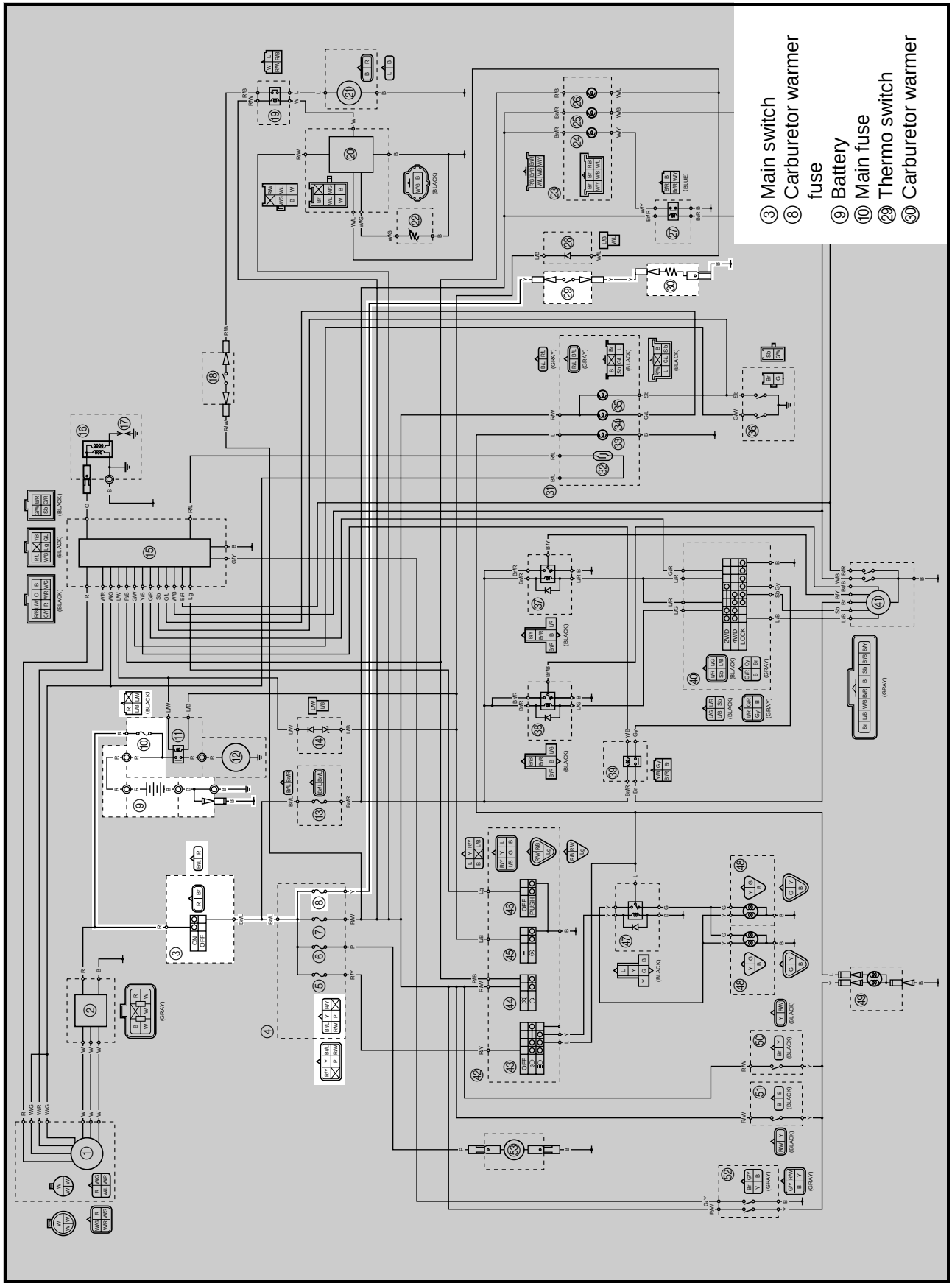

EBS01067

## TROUBLESHOOTING

**The carburetor warming system fails.**

Check:
1. main and carburetor warmer fuses
2. battery
3. main switch
4. thermo switch
5. carburetor warmer
6. wiring connections
   (of the entire carburetor warming system)

**NOTE:**
- Before troubleshooting, remove the following part(s):
1. seat
2. rear fender
- Troubleshoot with the following special tool(s).

**Pocket tester**
**90890-03112**
**Analog pocket tester**
**YU-03112-C**

EBS01043

1. Main and carburetor warmer fuses
   - Check the main and carburetor warmer fuses for continuity.
     Refer to "CHECKING THE FUSES" in chapter 3.
   - Are the main and carburetor warmer fuses OK?

YES → NO → Replace the fuse(s).

EBS01044

2. Battery
   - Check the condition of the battery.
     Refer to "CHECKING AND CHARGING THE BATTERY" in chapter 3.

**Minimum open-circuit voltage**
**12.8 V or more at 20 °C (68 °F)**

- Is the battery OK?

YES → NO →
- Clean the battery terminals.
- Recharge or replace the battery.

EBS01041

3. Main switch
   - Check the main switch for continuity.
     Refer to "CHECKING THE SWITCHES".
   - Is the main switch OK?

YES → NO → Replace the main switch.

4. Thermo switch

- Remove the thermo switch from the wire harness.
- Connect the pocket tester (Ω × 1) to the thermo switch ① as shown.
- Immerse the thermo switch in a container filled with water ②.
- Place a thermometer ③ in the water.
- Slowly heat the water, than let it cool to the specified temperature as indicated in the table.
- Check the thermo switch for continuity at the temperatures indicated in the table.

A The thermo switch circuit is closed.
B The thermo switch circuit is open.

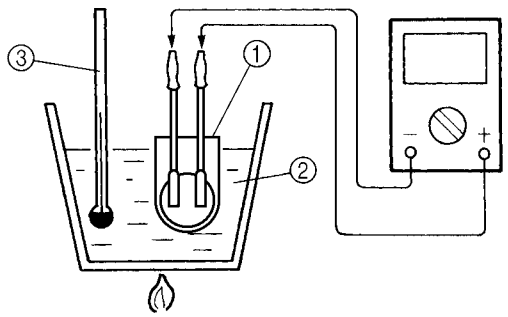


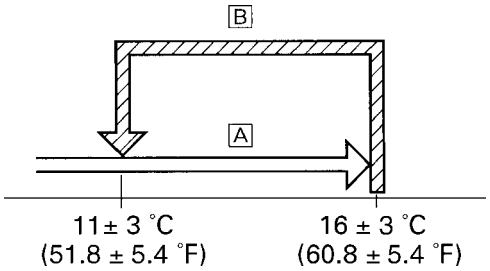


| Test step | Water temperature | Continuity |
|---|---|---|
| 1 | Less than 16 ± 3 °C (60.8 ± 5.4 °F) | YES |
| 2 | More than 16 ± 3 °C (60.8 ± 5.4 °F) | NO |
| 3 | More than 11 ± 3 °C (51.8 ± 5.4 °F) | NO |
| 4 | Less than 11 ± 3 °C (51.8 ± 5.4 °F) | YES |

Steps 1 & 2: Heating phase
Steps 3 & 4: Cooling phase

- Does the thermo switch operate properly?

YES ⇩

NO ⬇

Replace the thermo switch.

5. Carburetor warmer

- Remove the carburetor warmer from the carburetor.
- Connect the pocket tester (Ω × 1) to the carburetor warmer as shown.

**Positive tester probe →**
**carburetor warmer terminal ①**
**Negative tester probe →**
**carburetor warmer body ②**

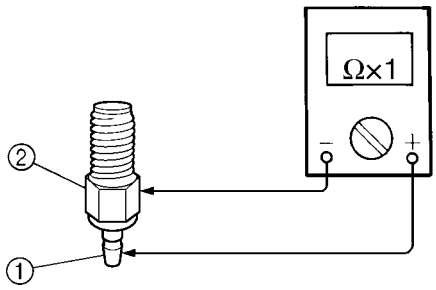


- Measure the carburetor warmer resistance.

**Carburetor warmer resistance**
**6 ~ 12 Ω at 20 °C (68 °F)**

- Is the carburetor warmer OK?

YES → NO → Replace the carburetor warmer.

EBS01090

6. Wiring

- Check the entire carburetor warming system wiring.
  Refer to “CIRCUIT DIAGRAM”.
- Is the carburetor warming system wiring properly connected and without defects?

YES → This circuit is OK.

NO → Properly connect or repair the carburetor warming system wiring.

EBS00537

# TROUBLESHOOTING

**NOTE:**
The following troubleshooting does not cover all the possible causes of trouble. It should be helpful, however, as a guide to troubleshooting. Refer to the relative procedure in this manual for check, adjustment and replacement of parts.

## STARTING FAILURE/HARD STARTING

### FUEL SYSTEM

**Fuel tank**
- Empty
- Clogged fuel tank breather hose
- Deteriorated or contaminated fuel

**Fuel cock**
- Clogged fuel hose

**Carburetor**
- Deteriorated or contaminated fuel
- Clogged pilot jet
- Clogged pilot air passage
- Sucked-in air
- Deformed float
- Worn needle valve
- Improperly sealed valve seat
- Improperly adjusted fuel level
- Improperly set pilot jet
- Clogged starter jet
- Choke valve malfunction

**Air filter**
- Clogged air filter element

### ELECTRICAL SYSTEM

**Spark plug**
- Improper plug gap
- Worn electrodes
- Wire between terminals broken
- Improper heat range
- Faulty spark plug cap

**Ignition coil**
- Broken or shorted primary/secondary
- Faulty spark plug lead
- Broken body

**CDI system**
- Faulty CDI unit
- Faulty pickup coil
- Faulty lighting coil
- Faulty charging coil
- Broken woodruff key

**Switches and wiring**
- Faulty main switch
- Faulty engine stop switch
- Broken or shorted wiring
- Faulty gear position switch
- Faulty start switch
- Faulty brake light switch

**Starting system**
- Faulty starter motor
- Faulty starter relay
- Faulty starter clutch
- Loose connections

**Battery**
- Faulty battery

**Fuse(s)**
- Blown, damaged or incorrect fuse
- Improperly installed fuse

### COMPRESSION SYSTEM

**Cylinder and cylinder head**
- Loose spark plug
- Loose cylinder head or cylinder
- Broken cylinder head gasket
- Broken cylinder gasket
- Worn, damaged or seized cylinder

**Valves, camshaft and crankshaft**
- Improperly sealed valve
- Improperly contacted valve and valve seat
- Improper valve timing
- Broken valve spring
- Seized camshaft
- Seized crankshaft

**Piston and piston rings**
- Improperly installed piston ring
- Worn, fatigued or broken piston ring
- Seized piston ring
- Seized or damaged piston

**Crankcase and crankshaft**
- Improperly seated crankcase
- Seized crankshaft

**Valve train**
- Improperly adjusted valve clearance
- Improperly adjusted valve timing

EBS00538

## POOR IDLE SPEED PERFORMANCE

### POOR IDLE SPEED PERFORMANCE

**Carburetor**
- Improperly returned choke
- Loose or clogged pilot jet
- Loose or clogged pilot air jet
- Improperly adjusted idle speed (throttle stop screw)
- Improper throttle cable play
- Flooded carburetor

**Intake manifold**
- Loosen carburetor joint

**Electrical system**
- Faulty battery
- Faulty CDI unit
- Faulty pickup coil
- Faulty ignition coil

**Valve train**
- Improperly adjusted valve clearance

**Air filter**
- Clogged air filter element
- Loosen air filter joint

EBS00539

## POOR MEDIUM AND HIGH-SPEED PERFORMANCE

### POOR MEDIUM AND HIGH-SPEED PERFORMANCE

Refer to “STARTING FAILURE/HARD STARTING” and “POOR IDLE SPEED PERFORMANCE”.

**Carburetor**
- Improper jet needle clip position
- Improperly adjusted fuel level
- Clogged or loose main jet
- Deteriorated or contaminated fuel

**Air filter**
- Clogged air filter element

EBS00540

## FAULTY DRIVE TRAIN

The following conditions may indicate damaged shaft drive components:

| Symptoms | Possible Causes |
|---|---|
| 1. A pronounced hesitation or “jerky” movement during acceleration, deceleration, or sustained speed. (This must not be confused with engine surging or transmission characteristics.)<br>2. A “rolling rumble” noticeable at low speed; a high-pitched whine; a “clunk” from a shaft drive component or area.<br>3. A locked-up condition of the shaft drive mechanism, no power transmitted from the engine to the front and/or rear wheels. | A. Bearing damage.<br>B. Improper gear lash.<br>C. Gear tooth damage.<br>D. Broken drive shaft.<br>E. Broken gear teeth.<br>F. Seizure due to lack of lubrication.<br>G. Small foreign objects lodged between the moving parts. |

**NOTE:**

Areas A, B, and C above may be extremely difficult to diagnose. The symptoms are quite subtle and difficult to distinguish from normal vehicle operating noise. If there is reason to believe these components are damaged, remove the components and check them.

EBS00542

# FAULTY GEAR SHIFTING

### HARD SHIFTING

Refer to “FAULTY CLUTCH PERFORMANCE”.

### SHIFT LEVER DOES NOT MOVE

**Shift shaft**
- Bent shift shaft

**Shift drum, shift forks**
- Groove jammed with impurities
- Seized shift fork
- Bent shift fork guide bar

**Transmission**
- Seized transmission gear
- Jammed impurities
- Incorrectly assembled transmission

**Shift guide**
- Broken shift guide

### JUMPS OUT OF GEAR

**Shift shaft**
- Improperly adjusted shift lever position
- Improperly returned stopper lever

**Shift forks**
- Worn shift fork

**Shift drum**
- Improper thrust play
- Worn shift drum groove

**Transmission**
- Worn gear dog

EBS00543

# FAULTY CLUTCH PERFORMANCE

### ENGINE OPERATES BUT VEHICLE WILL NOT MOVE

**Transmission**
- Damaged transmission gears

### CLUTCH SLIPPING

**Clutch spring**
- Damaged, loose or worn clutch shoe spring

**Clutch shoe**
- Damaged or worn clutch shoe

**Primary sliding sheave**
- Seized primary sliding sheave

**Clutch**
- Loose clutch spring
- Fatigued clutch spring
- Worn friction plate
- Worn clutch plate
- Incorrectly assembled clutch

**Engine oil**
- Low oil level
- Improper quality (low viscosity)
- Deterioration

### POOR STARTING PERFORMANCE

**Clutch shoe**
- Bent, damaged or worn clutch shoe

**Clutch**
- Warped pressure plate
- Unevenly tensioned clutch springs
- Loose clutch boss nut
- Burnt primary driven gear bushing
- Bent clutch plate
- Swollen friction plate
- Broken clutch boss

**Engine oil**
- High oil level
- Improper quality (high viscosity)
- Deterioration

EBS00546

# OVERHEATING

### OVERHEATING

**Ignition system**
- Improper spark plug gap
- Improper spark plug heat range
- Faulty CDI unit

**Fuel system**
- Improper carburetor main jet (improper setting)
- Improper fuel level
- Clogged air filter element

**Compression system**
- Heavy carbon build-up

**Engine oil**
- Improper oil level
- Improper oil viscosity
- Inferior oil quality

**Brake**
- Brake drag

**Oil cooling system**
- Faulty oil temperature sensor
- Faulty oil cooler fan motor relay
- Faulty oil cooler fan motor circuit breaker
- Clogged or damaged oil cooler
- Inoperative fan motor

EBS00550

# FAULTY BRAKE

### POOR BRAKING EFFECT

**Disc brake**
- Worn brake pads
- Worn disc
- Air in brake fluid
- Leaking brake fluid
- Faulty master cylinder kit cup
- Faulty caliper kit seal
- Loose union bolt
- Broken brake hose and pipe
- Oily or greasy disc/brake pads
- Improper brake fluid level
- Faulty brake cable

EBS00551

# SHOCK ABSORBER MALFUNCTION

### MALFUNCTION

- Bent or damaged damper rod
- Damaged oil seal lip
- Fatigued shock absorber spring

EBS00552

# UNSTABLE HANDLING

## UNSTABLE HANDLING

**Handlebar**
- Improperly installed or bent

**Steering**
- Incorrect toe-in
- Bent steering stem
- Improperly installed steering stem
- Damaged bearing or bearing race
- Bent tie-rods
- Deformed steering knuckles

**Tires**
- Uneven tire pressures on both sides
- Incorrect tire pressure
- Uneven tire wear

**Wheels**
- Deformed wheel
- Loose bearing
- Bent or loose wheel axle
- Excessive wheel runout

**Frame**
- Bent
- Damaged frame

EBS00553

# LIGHTING SYSTEM

## HEADLIGHT DOES NOT COME ON
- Improper bulb
- Too many electric accessories
- Hard charging (broken stator coil and/or faulty rectifier/regulator)
- Incorrect connection
- Improperly grounded
- Poor contacts (main or light switch)
- Bulb life expired

## BULB BURNT OUT
- Improper bulb
- Faulty battery
- Faulty rectifier/regulator
- Improperly grounded
- Faulty main and/or light switch
- Bulb life expired

## TAIL/BRAKE LIGHT DOES NOT LIGHT
- Wrong tail/brake light bulb
- Too many electrical accessories
- Hard charging (broken stator coil and/or faulty rectifier/regulator)
- Incorrect connection
- Improperly grounded
- Poor contacts (main or light switch)
- Burnt-out tail/brake light bulb

## TAIL/BRAKE LIGHT BULB BURNT OUT
- Wrong tail/brake light bulb
- Faulty battery
- Faulty rectifier/regulator
- Improperly grounded
- Faulty main and/or light switch
- Incorrectly adjusted rear brake light switch
- Tail/brake light bulb life expired

# YFM40FBW 2007 WIRING DIAGRAM

① AC magneto
② Rectifier/regulator
③ Main switch
④ Fuse box
⑤ Headlight fuse
⑥ Auxiliary DC jack fuse
⑦ Ignition fuse
⑧ Carburetor warmer fuse
⑨ Battery
⑩ Main fuse
⑪ Starter relay
⑫ Starter motor
⑬ Four-wheel-drive motor fuse
⑭ Diode 2
⑮ CDI unit
⑯ Ignition coil
⑰ Spark plug
⑱ Oil cooler fan motor circuit breaker
⑲ Oil cooler fan motor relay
⑳ Oil cooler fan motor control unit
㉑ Oil cooler fan motor
㉒ Oil temperature sensor
㉓ Indicator light assembly
㉔ On-command four-wheel-drive indicator light
㉕ Differential gear lock indicator light
㉖ Oil temperature warning light
㉗ On-command four-wheel-drive indicator light relay
㉘ Diode 1
㉙ Thermo switch
㉚ Carburetor warmer
㉛ Speedometer assembly
㉜ Speed sensor
㉝ Meter lighting
㉞ Reverse indicator light
㉟ Neutral indicator light
㊱ Gear position switch
㊲ Four-wheel-drive relay 1
㊳ Four-wheel-drive relay 2
㊴ Four-wheel-drive relay 3
㊵ On-command four-wheel-drive switch and differential gear lock switch
㊶ Differential gear motor
㊷ Left handlebar switch
㊸ Light switch
㊹ Engine stop switch
㊺ Start switch
㊻ Override switch
㊼ Headlight relay
㊽ Headlight
㊾ Tail/brake light
㊿ Brake pedal light switch
(51) Front brake light switch
(52) Rear brake lever light switch
(53) Auxiliary DC jack

**COLOR CODE**

| | |
|---|---|
| B | Black |
| Br | Brown |
| G | Green |
| Gy | Gray |
| L | Blue |
| Lg | Light green |
| O | Orange |
| P | Pink |
| R | Red |
| Sb | Sky blue |
| W | White |
| Y | Yellow |
| B/G | Black/Green |
| B/L | Black/Blue |
| B/R | Black/Red |
| B/Y | Black/Yellow |
| Br/B | Brown/Black |
| Br/L | Brown/Blue |
| Br/R | Brown/Red |
| G/L | Green/Blue |
| G/R | Green/Red |
| G/W | Green/White |
| G/Y | Green/Yellow |
| Gy/G | Gray/Green |
| L/B | Blue/Black |
| L/G | Blue/Green |
| L/R | Blue/Red |
| L/W | Blue/White |
| R/B | Red/Black |
| R/L | Red/Blue |
| R/W | Red/White |
| R/Y | Red/Yellow |
| W/B | White/Black |
| W/G | White/Green |
| W/L | White/Blue |
| W/R | White/Red |
| W/Y | White/Yellow |
| Y/B | Yellow/Black |

YAMAHA

YAMAHA MOTOR CO., LTD.
2500 SHINGAI IWATA SHIZUOKA JAPAN

PRINTED IN U.S.A.
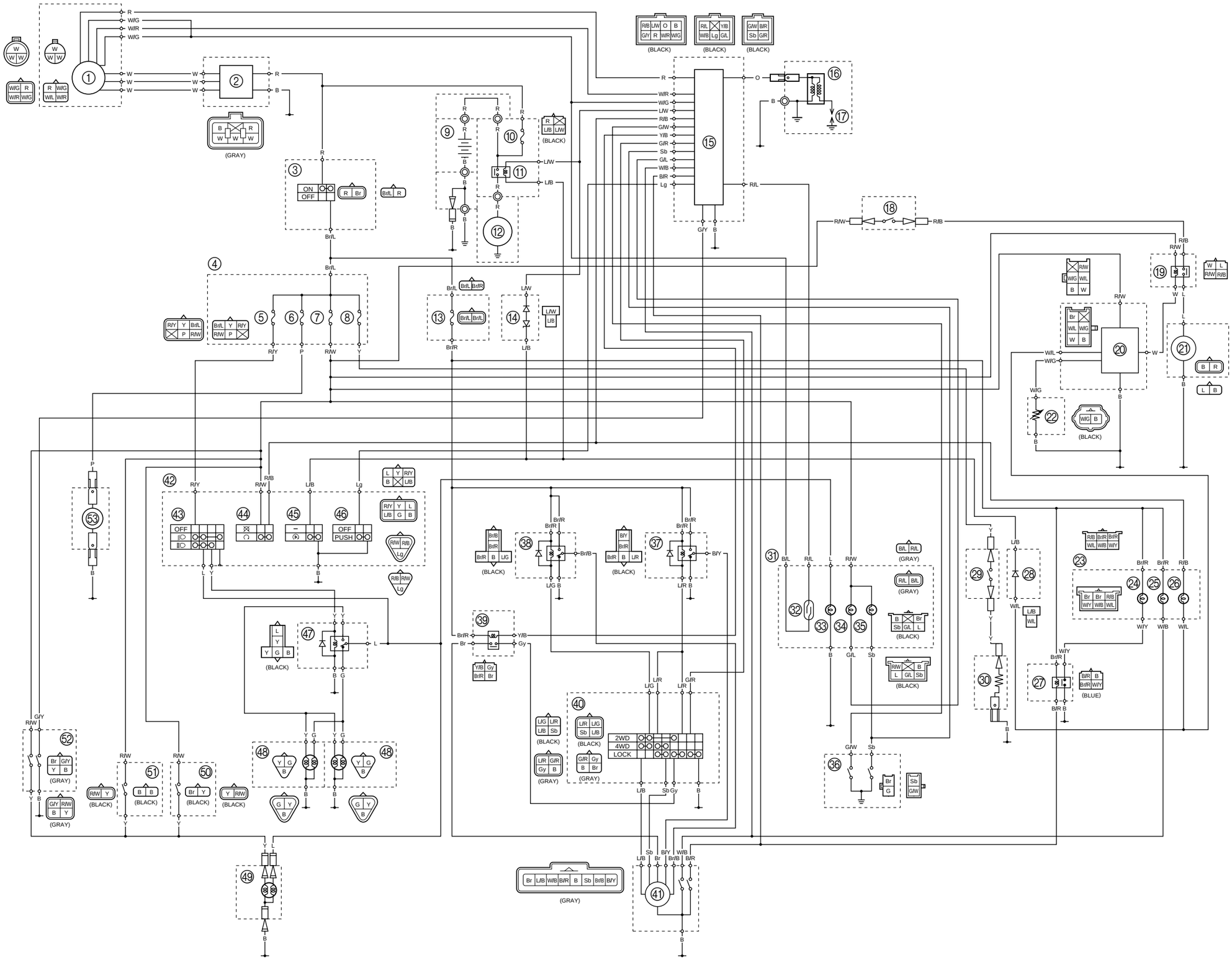
# YFM40FBW 2007 WIRING DIAGRAM