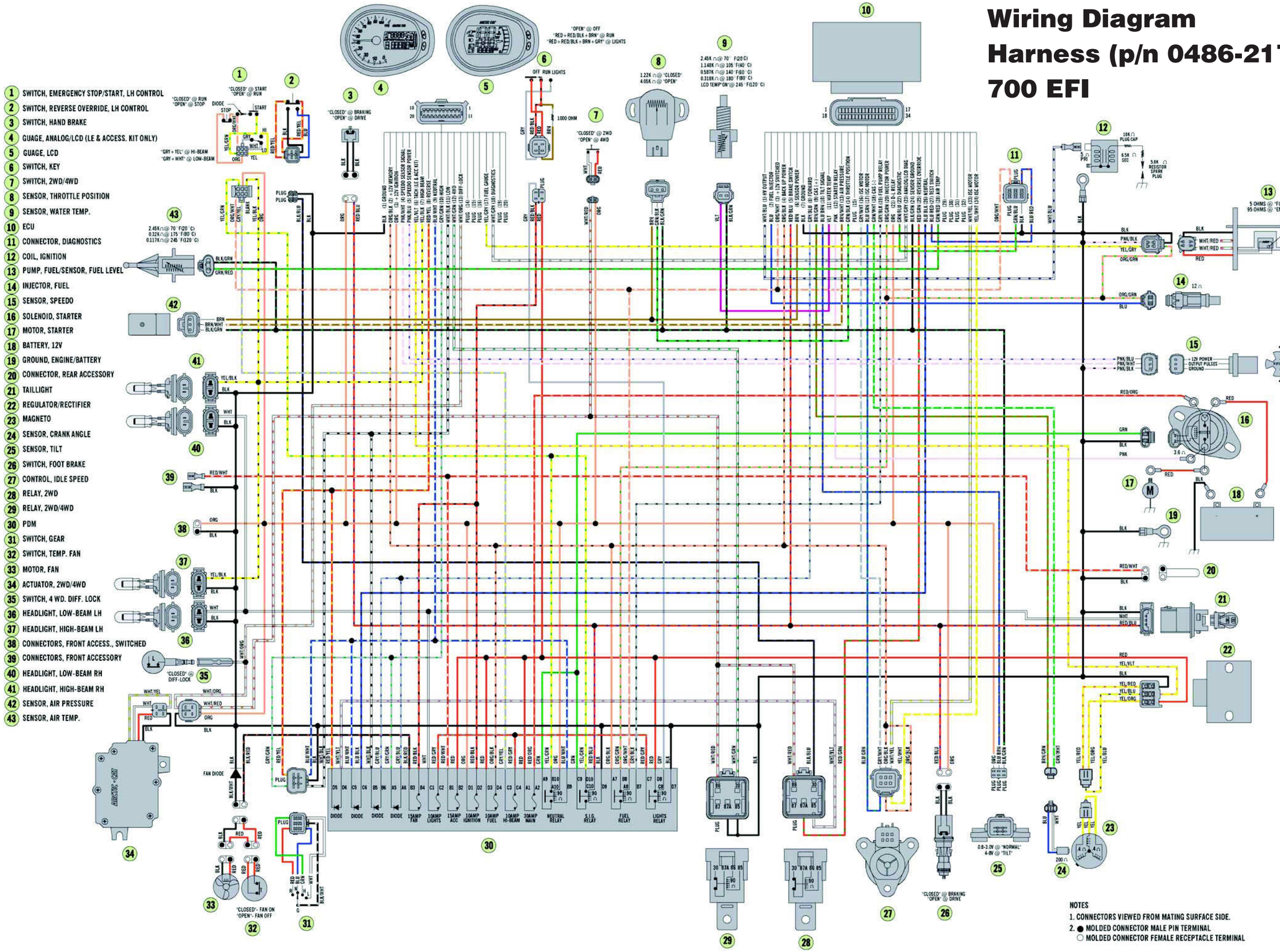Wiring Diagram
Harness (p/n 0486-217)
700 EFI