2005 Sportsman 6x6

Owner's Manual

for Maintenance and Safety

POLARIS®
The Way Out.

Read this manual carefully. It contains important safety information.
This is an adult vehicle only.
Operation is prohibited for those under 16 years of age.

⚠WARNING

Improper vehicle use can result in SEVERE INJURY or DEATH.

ALWAYS USE AN APPROVED HELMET AND PROTECTIVE GEAR | NEVER USE ON PUBLIC ROADS | NEVER CARRY PASSENGERS | NEVER USE WITH DRUGS OR ALCOHOL

NEVER:

- **Operate without proper training or instruction.**
- **Operate on public roads. A collision can occur with another vehicle.**
- **Operate at speeds too fast for your skills or the conditions.**
- **Use ALCOHOL or DRUGS before or while operating this vehicle.**
- **Carry Passengers.**

ALWAYS:

- **Avoid paved surfaces, which may adversely affect handling and control.**
- **Use proper RIDING TECHNIQUES to avoid vehicle overturns on hills and rough terrain, and in turns.**
- **Wear eye protection, helmet and protective apparel.**

READ OWNER'S MANUAL.
FOLLOW ALL INSTRUCTIONS AND WARNINGS.

Part No. 9919500 Rev 01
PRINTED IN THE USA

POLARIS®
The Way Out.

⚠ WARNING

The engine exhaust from this product contains chemicals known to cause cancer, birth defects or other reproductive harm.

A card containing important ATV safety information should be attached to the owner's manual on the next page. If you cannot locate this card, or if it has been removed, please call 1-800-342-3764 for assistance.

For 50 years we've been helping Polaris customers find The Way Out.

It's been a fun ride. But then, after all these years, That's what we're all about.

Find out more about our exciting once-in-a-lifetime 50th Anniversary celebration: Go to www.polarisindustries.com and look for the 50th Anniversary link.

This is a ride you don't want to miss!

Copyright 2004 Polaris Sales Inc. All information contained within this publication is based on the latest product information at the time of publication. Due to constant improvements in the design and quality of production components, some minor discrepancies may result between the actual vehicle and the information presented in this publication. Depictions and/or procedures in this publication are intended for reference use only. No liability can be accepted for omissions or inaccuracies. Any reprinting or reuse of the depictions and/or procedures contained within, whether whole or in part, is expressly prohibited.

Printed in U.S.A.

2005 Sportsman 6x6 Owner's Manual P/N 9919500

WELCOME

Thank you for purchasing a Polaris vehicle, and welcome to our world-wide family of Polaris owners. We proudly produce an exciting line of utility and recreational products. Visit our Web site at www.polarisindustries.com.

Polaris Recreational Vehicles

- Snowmobiles
- All-terrain vehicles (ATVs)
- *RANGER* utility vehicles
- Watercraft
- Victory motorcycles

We believe Polaris sets a standard of excellence for all utility and recreational vehicles manufactured in the world today. Many years of experience have gone into the engineering, design, and development of your Polaris vehicle, making it the finest vehicle we've ever produced.

For safe and enjoyable operation of your vehicle, be sure to follow the instructions and recommendations in this owner's manual. Your manual contains instructions for minor maintenance, but information about major repairs is outlined in the *Polaris Service Manual* and should be performed only by a Factory Certified Master Service Dealer (MSD) Technician.

Your Polaris dealer knows your vehicle best and is interested in your total satisfaction. Be sure to return to your dealership for all of your service needs during, and after, the warranty period.

We also take great pride in our Parts, Apparel and Accessories (PAA) products, available through our online store at www.purepolaris.com. Have your accessories and clothing delivered right to your door!

POLARIS and POLARIS THE WAY OUT are registered trademarks of Polaris Industries Inc.

TABLE OF CONTENTS

WELCOME 3
VEHICLE IDENTIFICATION NUMBERS 7
SAFETY 8
FEATURES AND CONTROLS 33
OPERATION 49
EMISSION CONTROL SYSTEMS 68
MAINTENANCE AND LUBRICATION 69
POLARIS PRODUCTS 113
SPECIFICATIONS 114
TROUBLESHOOTING 116
WARRANTY 120
INDEX 129

VEHICLE IDENTIFICATION NUMBERS

Record your ATV's identification numbers and key number in the spaces provided. Remove the spare key and store it in a safe place. Your key can be duplicated only by mating a Polaris key blank with one of your existing keys, so if both keys are lost, the ignition switch must be replaced.

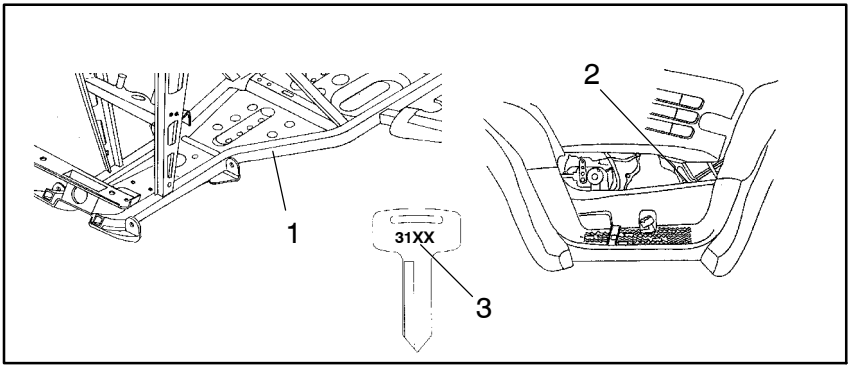

Vehicle Model Number: _____

Frame VIN (1): _____

Engine Serial Number (2): _____

Key Number (3): _____

SAFETY

Safety Decals and Locations

Warning decals have been placed on the ATV for your protection. Read and follow the instructions of the decals on the ATV carefully. If any of the decals depicted in this manual differ from the decals on your ATV, always read and follow the instructions of the decals *on the ATV.*

If any decal becomes illegible or comes off, contact your Polaris dealer to purchase a replacement. Replacement *safety* decals are provided by Polaris at no charge. The part number is printed on the decal.

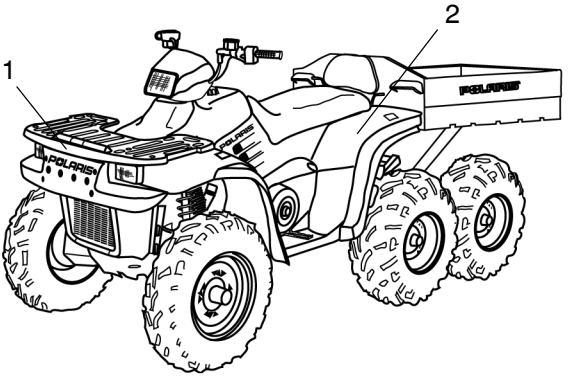

⚠ WARNING

1 • **DO NOT TOW FROM RACK OR BUMPER. Vehicle damage or tipover may result causing severe injury or death. Tow only from tow hooks or hitch.**
• **Maximum Front Rack Load 75 lbs.**

7172592

⚠ WARNING

IMPROPER TIRE PRESSURE OR OVERLOADING can cause loss of control resulting in SEVERE INJURY OR DEATH.

TIRE PRESSURE IN PSI (Kpa): FRONT 5 (34,5) CENTER 5 (34,5) REAR 5 (34,5)

MAXIMUM WEIGHT CAPACITY (Gross Vehicle Weight INCLUDING MACHINE, DRIVER AND CARGO IS 1965 LBS. (893 kg)

2

Reduce speed and allow greater distance for braking when carrying cargo. Overloading or carrying tall, off-center, or unsecured loads will increase your risk of losing control. Loads should be centered, carried as low as possible in bed, and firmly secured to the rack.
For stability on rough or hilly terrain, reduce speed and cargo. Do not block headlight. Be careful if load extends over the side of the rack or box.

Read *Owner's Manual* for more detailed loading information.

7172591

Safety Decals and Locations

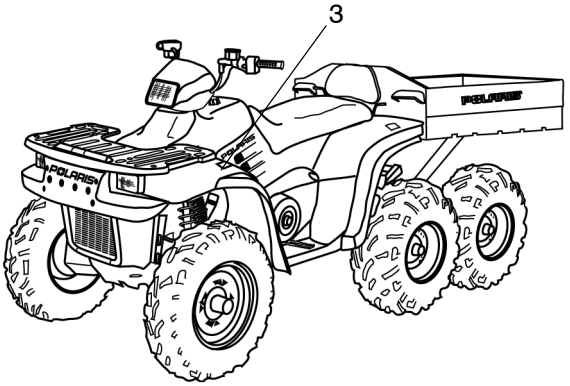

⚠ WARNING

3 Improper vehicle use can result in SEVERE INJURY or DEATH.

NEVER:

- Operate on public roads. A collision can occur with another vehicle.
- Carry passengers. Passengers affect balance and steering and increase risk of losing control.
- USE ALCOHOL or DRUGS before or while operating this vehicle.
- Operate at speeds too fast for your skills or the conditions.
- Operate this vehicle on HILLS steeper than 15 degrees 15°. To prevent flipover on hilly terrain, use throttle and brakes gradually.

ALWAYS:

- Use an approved HELMET AND PROTECTIVE GEAR.
- Avoid paved surfaces. Pavement may seriously affect handling and control.
- Use proper RIDING TECHNIQUES to avoid vehicle overturns on hills and rough terrain and in turns.
- Use OVERRIDE for reverse speed limiter with caution. To prevent loss of control, never activate override button with open throttle.
- REVERSE operation can be dangerous, even at low speeds. Steering becomes difficult. To prevent flipover, avoid sharp turns. PARKING BRAKE may relax when used for more than 5 minutes. When parking on grades, leave shift in forward.

LOCATE AND READ OWNER'S MANUAL. FOLLOW ALL INSTRUCTIONS AND WARNINGS. IF OWNER'S MANUAL IS MISSING, CONTACT A POLARIS DEALER FOR A REPLACEMENT.

7172589

SAFETY
Safety Decals and Locations

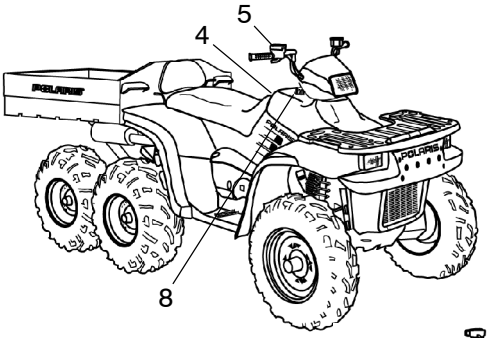

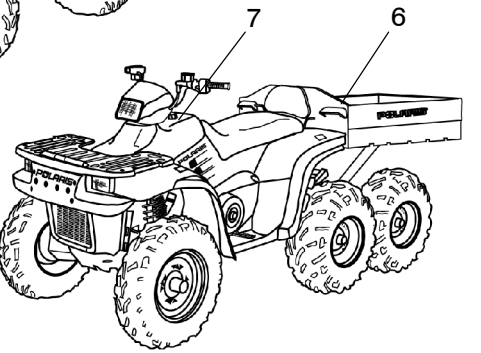

4

⚠ WARNING

Operating this vehicle if you are under the age of 16 increases your chance of severe injury or death.

NEVER operate this vehicle if you are under age 16.

7172588

7

⚠ WARNING

Pushing reverse override button may cause sudden increases in power and traction if too much throttle is applied. Loss of control or forward flipover may result, especially in AWD. See Owner's Manual.

7172564

8

ALL WHEEL DRIVE SWITCH

Do not push switch to engage AWD if the rear wheels are spinning. This may cause severe drive shaft and clutch damage.
See your owner's manual.

7079780

ETC

5 This vehicle is equipped with a Polaris Electronic Throttle Control (ETC) to reduce the risk of a stuck or "frozen" throttle. Please refer to your owner's manual for details.

6

⚠ WARNING

Remove flammable containers from before refueling.

⚠ WARNING

- Passengers can be thrown off. This can cause serious injury or death.
- Never carry passengers.

⚠ WARNING

Maximum Box Load 800 lbs.

Safety Decals and Locations

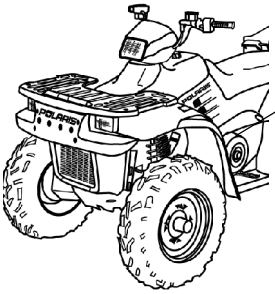

⚠WARNING

- Moving parts hazard under belt-clutch guard. To prevent serious injury, do not operate vehicle with guard removed.
- Do not modify engine or clutch. Doing so can cause part failure, possible imbalance, and excessive engine RPM, which can result in serious injury or death.

NO STEP

7172563

TRAILER MAX WEIGHT:
1500 LBS. (682 KG) ON LEVEL GROUND
850 LBS. (386 KG) UP TO 15° GRADE

HITCH MAX. VERTICAL WEIGHT: 150 LBS. (68KG)

7170509

(on hitch)

ATTENTION

- Operation of this vehicle without the filter element will severely damage the engine.
- Clean air filter often, more frequent cleaning required in dusty conditions.
- Operation of this vehicle without engine breather filter(s) can cause engine damage. Consult owner's manual for details.
- Specific carburetor jetting and adjustments are required depending on temperature and altitude. See your owner's manual.

Factory setting:

40° to 80° F. at 0-3000 feet
(5° to 27° C. at 0-900 meters).

7079902

(under seat)

SAFETY

Safe Riding Gear

Always wear clothing suited to the type of riding. ATV riding requires special protective clothing for comfort and to reduce the chance of injury.

1. Helmet

Your helmet is the most important piece of protective gear for safe riding. A helmet can prevent a severe head injury.

Select an approved helmet that meets or exceeds your state's safety standards and bears either the Department of Transportation (DOT) label, the American National Standards Institute label (ANSI z90.1), or the Snell Memorial Foundation label.

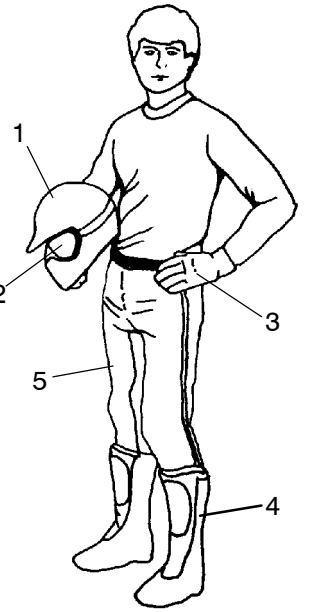

2. Eye Protection

Do not depend on sunglasses for proper eye protection. A pair of goggles or a helmet face shield offer the best protection for your eyes. They should be kept clean and be of shatterproof design (bearing the markings Z2.1 or VESC 8).

3. Gloves

Off-road style gloves with knuckle pads are the best for comfort and protection.

4. Boots

The best footwear is a pair of strong over-the-calf boots with heels, like moto-cross boots.

5. Clothing

Always wear long sleeves and long pants to protect arms and legs. Riding pants with kneepads and a jersey with shoulder pads provide the best protection.

Operator Safety

⚠ WARNING

Failure to follow the warnings contained in this manual can result in serious injury or death.

A Polaris ATV is not a toy and can be hazardous to operate. This vehicle handles differently than other vehicles, such as motorcycles and cars. A collision or rollover can occur quickly, even during routine maneuvers like turning, or driving on hills or over obstacles, if you fail to take proper precautions.

Read and understand your owner's manual and all warnings before operating a Polaris ATV.

Age Restrictions

This vehicle is an ADULT VEHICLE ONLY. Operation is prohibited for anyone under 16 years of age.

Know Your Vehicle

As the operator of the vehicle, you are responsible for your personal safety, the safety of others, and the protection of our environment. Read and understand your owner's manual, which includes valuable information about all aspects of your vehicle, including safe operating procedures.

Safety Training

When you purchased your new ATV, your dealer offered a hands-on safety training course that covers all aspects of vehicle safety. You were also provided with printed materials that explain safe operating procedures. You should review this information on a regular basis.

If you purchased a used Polaris ATV from a party other than a Polaris dealer, you can request this free safety training from any authorized Polaris dealer.

A Polaris ATV is an off-road vehicle. Familiarize yourself with all laws and regulations concerning the operation of the ATV in your area.

We strongly advise you to strictly follow the recommended maintenance program outlined in your owner's manual. This preventive maintenance program is designed to ensure that all critical components on your vehicle are thoroughly inspected at specific intervals.

SAFETY

Operator Safety

The following signal words and symbols appear throughout this manual and on your vehicle. Your safety is involved when these words and symbols are used. Become familiar with their meanings before reading the manual.

The *safety alert symbol*, on your vehicle or in this manual, alerts you to the potential for personal injury.

WARNING

The *safety alert warning* indicates a potential hazard that may result in serious injury or death.

CAUTION

The *safety alert caution* indicates a potential hazard that may result in minor personal injury or damage to the vehicle.

CAUTION

A *caution* indicates a situation that may result in damage to the vehicle.

NOTE:

A *note* will alert you to important information or instructions.

Operator Safety

⚠ WARNING

Serious injury or death can result if you do not follow these instructions and procedures, which are outlined in further detail within your owner's manual.

- Read this manual and all labels carefully, and follow the operating procedures described.
- Never operate the Sportsman 6x6 without proper instruction. *Take a training course.* Beginners should receive training from a certified instructor. Contact an authorized Polaris dealer or call Polaris at 1-800-342-3764 to find out about the training courses nearest you.
- Never allow anyone under 16 years of age to operate this vehicle.
- Never permit a guest to operate the vehicle unless the guest has read this manual and all product labels and has completed a certified safety training course.
- Always avoid operating this vehicle on paved surfaces, including sidewalks, driveways, parking lots, and streets.
- Never operate this vehicle on a public street, road or highway, including a dirt or gravel road.
- Never operate this vehicle without wearing an approved helmet that fits properly. Always wear eye protection (goggles or face shield), gloves, boots, a long-sleeved shirt or jacket, and long pants.
- Never consume alcohol or drugs before or while operating this vehicle.
- Never operate at excessive speeds. Travel at speeds appropriate for the terrain, visibility and operating conditions, and your experience.
- Never attempt wheelies, jumps or other stunts.
- Always inspect your vehicle before each use to make sure it's in safe operating condition. Always follow the inspection and maintenance procedures and schedules outlined in your owner's manual.
- Always keep both hands on the handlebars and both feet on the footrests of the vehicle during operation.
- Always travel slowly and use extra caution when operating on unfamiliar terrain. Be alert to changing terrain conditions.
- Never operate on excessively rough, slippery, or loose terrain.
- Always follow recommended turning procedures as described in this manual. Practice turning at low speeds before attempting to turn at faster speeds. Do not turn at excessive speeds.

SAFETY

Operator Safety

- Always have the vehicle inspected by an authorized Polaris dealer if it's been involved in an accident.
- Never operate on hills too steep for the vehicle or for your abilities. Practice on smaller hills before attempting larger hills.
- Always follow proper procedures for climbing hills. Check the terrain carefully before ascending a hill. Never climb hills with excessively slippery or loose surfaces. Shift your weight forward. Never open the throttle suddenly or make sudden gear changes. Never go over the top of a hill at high speed.
- Always follow proper procedures for going downhill and for braking on hills. Check the terrain carefully before you start down a hill. Shift your weight backward. Never go down a hill at high speed. Avoid going down a hill at an angle, which would cause the vehicle to lean sharply to one side. Travel straight down the hill when possible.
- Always follow proper procedures for crossing the side of a hill. Avoid hills with excessively slippery or loose surfaces. Shift your weight to the uphill side of the vehicle. Never attempt to turn the vehicle around on any hill until you've mastered (on level ground) the turning technique outlined in this manual. Avoid crossing the side of a steep hill when possible.
- Always use proper procedures if the vehicle stalls or rolls backwards while climbing a hill. To avoid stalling, maintain a steady speed when climbing a hill. Always dismount on the uphill side, or to either side if the vehicle is pointed straight uphill. Turn the vehicle around and remount following the procedure described in this manual.
- Always check for obstacles before operating in a new area. Never attempt to operate over large obstacles, such as rocks or fallen trees.
- Always be alert to the potential for skidding or sliding. On slippery surfaces (like ice), travel slowly and use extra caution to reduce the chance of skidding or sliding out of control.
- Avoid operating the vehicle through deep or fast-flowing water. If it's unavoidable, travel slowly, balance your weight carefully, avoid sudden movements, and maintain a slow and steady forward motion. Do not make sudden turns or stops, and do not make sudden throttle changes.

Operator Safety

- Wet brakes may have reduced stopping ability. Test your brakes after leaving water. If necessary, apply them lightly several times to allow friction to dry out the pads.
- Always check for obstacles or people behind the vehicle before operating in reverse. When it's safe to proceed in reverse, move slowly and avoid turning at sharp angles.
- Always use the size and type of tires specified for your vehicle, and always maintain proper tire pressure.
- Never modify this vehicle through improper installation or use of accessories.
- Never exceed the stated load capacity for your vehicle. Cargo must be properly distributed and securely attached. Reduce speed and follow the instructions in this manual for hauling cargo or towing. Allow a greater distance for braking.
- Always remove the ignition key when the vehicle is not in use to prevent unauthorized use or accidental starting.

FOR MORE INFORMATION ABOUT ATV SAFETY, call the Consumer Product Safety Commission at 1-800-638-2772, or call Polaris at 1-800-342-3764.

Equipment Modifications

We are concerned for the safety of our customers and for the general public. Therefore, we strongly recommend that consumers do not install on a Polaris Sportsman 6x6 any equipment that may increase the speed or power of the vehicle, or make any other modifications to the vehicle for these purposes. Any modifications to the original equipment of the vehicle create a substantial safety hazard and increase the risk of bodily injury.

The warranty on your Polaris Sportsman 6x6 is terminated if any equipment has been added to the vehicle, or if any modifications have been made to the vehicle, that increase its speed or power.

NOTE: The addition of certain accessories, including (but not limited to) mowers, blades, tires, sprayers, or large racks, may change the handling characteristics of the vehicle. Use only Polaris-approved accessories, and familiarize yourself with their function and effect on the vehicle.

SAFETY
Operator Safety

⚠ WARNING

POTENTIAL HAZARD

Operating this vehicle without proper instruction.

WHAT CAN HAPPEN

The risk of an accident is greatly increased if the operator does not know how to operate the vehicle properly in different situations and on different types of terrain.

HOW TO AVOID THE HAZARD

Beginning and inexperienced operators should complete the certified training course offered by Polaris. Operators should regularly practice the skills learned in the course and the operating techniques described in the owner's manual.

For more information about the training course, contact an authorized Polaris dealer or call Polaris at 1-800-342-3764.

⚠ WARNING

POTENTIAL HAZARD

Failure to follow the age recommendations for this vehicle.

WHAT CAN HAPPEN

Severe injury and/or death could occur if a person under the age of 16 operates the Sportsman 6x6.

Even though a child may be within the recommended age group for operating some vehicles, he/she may not have the skills, abilities, or judgment needed to operate the Sportsman 6x6 safely and could be susceptible to accident or injury.

HOW TO AVOID THE HAZARD

No one under the age of 16 should operate a Polaris Sportsman 6x6.

Operator Safety

⚠ WARNING

POTENTIAL HAZARD

Carrying a passenger on a Sportsman 6x6.

WHAT CAN HAPPEN

Carrying a passenger greatly reduces the operator's ability to balance and control the vehicle, which could cause an accident and injury to the operator and/or passenger.

HOW TO AVOID THE HAZARD

Never carry a passenger. The purpose of the long seat is to allow the operator to shift position as needed during operation. It is not intended for carrying passengers.

⚠ WARNING

POTENTIAL HAZARD

Operating a Sportsman 6x6 on paved surfaces, including sidewalks, paths, parking lots, and driveways.

WHAT CAN HAPPEN

Sportsman 6x6 tires are designed for off-road use. Operating on paved surfaces may seriously affect the handling and control of the vehicle and could result in loss of control, accident, and/or injury.

HOW TO AVOID THE HAZARD

Avoid operating the Sportsman 6x6 on pavement. If it's unavoidable, travel slowly and avoid sudden turns or stops.

⚠ WARNING

Safe operation of this rider active vehicle requires good judgement and physical skills. Persons with cognitive or physical disabilities who operate this vehicle have an increased risk of overturns and loss of control, which could result in serious injury or death.

SAFETY
Operator Safety

⚠ WARNING

POTENTIAL HAZARD

Operating this vehicle on public streets, roads or highways.

WHAT CAN HAPPEN

The vehicle could collide with another vehicle.

HOW TO AVOID THE HAZARD

Never operate the Sportsman 6x6 on any public street, road or highway, including dirt and gravel roads.

⚠ WARNING

POTENTIAL HAZARD

Operating this vehicle without wearing an approved helmet, eye protection and protective clothing.

WHAT CAN HAPPEN

Operating a Sportsman 6x6 without an approved helmet increases the risk of a severe head injury or death in the event of an accident.

Operating without eye protection could result in an accident and could increase the chance of a severe injury in the event of an accident.

HOW TO AVOID THE HAZARD

Always wear an approved helmet that fits properly.

Always wear eye protection (goggles or face shield), gloves, boots, long-sleeved shirt or jacket, and long pants.

Operator Safety

⚠ WARNING

POTENTIAL HAZARD

Stalling or rolling backwards while climbing a hill.

WHAT CAN HAPPEN

Stalling or rolling while climbing a hill could result in vehicle overturn.

HOW TO AVOID THE HAZARD

Maintain steady speed when climbing a hill.

If you lose all forward speed:

Keep your body weight toward the front of the vehicle (uphill).

Apply the brakes. After the vehicle has completely stopped, lock the parking brake.

If you begin rolling backwards:

Keep your body weight toward the front of the vehicle (uphill).

Do not apply engine power.

Do not apply the rear brakes.

Gradually apply the service brake. When fully stopped, apply the auxiliary brake as well, and then lock the parking brake.

Dismount on the uphill side, or to either side if the vehicle is pointed straight uphill.

Turn the vehicle around and remount, following the procedure described in the owner's manual. See page 62. In the event of an accident, have an authorized Polaris dealer inspect the entire vehicle for possible damage, including (but not limited to) brakes, throttle and steering.

SAFETY
Operator Safety

⚠ WARNING

POTENTIAL HAZARD

Operating the Sportsman 6x6 at excessive speeds.

WHAT CAN HAPPEN

Excessive speed increases the operator's chance of losing control of the vehicle, which can result in an accident.

HOW TO AVOID THE HAZARD

Always operate the vehicle at a speed that's proper for the terrain, visibility and operating conditions, and your experience.

⚠ WARNING

POTENTIAL HAZARD

Improperly operating in reverse.

WHAT CAN HAPPEN

The Sportsman 6x6 could collide with an obstacle or person, resulting in severe injury.

HOW TO AVOID THE HAZARD

Before shifting into reverse gear, always check for obstacles or people behind the vehicle. When it's safe to proceed, back slowly.

⚠ WARNING

POTENTIAL HAZARD

Failure to inspect the vehicle before operating.

Failure to properly maintain the vehicle.

WHAT CAN HAPPEN

Poor maintenance increases the possibility of an accident or equipment damage.

HOW TO AVOID THE HAZARD

Always inspect your vehicle before each use to make sure it's in safe operating condition.

Always follow the inspection and maintenance procedures and schedules described in the owner's manual.

Operator Safety

⚠ WARNING

POTENTIAL HAZARD

Removing hands from the handlebars or feet from the footrests during operation.

WHAT CAN HAPPEN

Removing even one hand or foot can reduce ability to control the vehicle or could cause loss of balance and ejection from the vehicle.

If the operator's foot is not firmly planted on the footrest, it could come into contact with the rear wheels and lead to accident or injury.

HOW TO AVOID THE HAZARD

Always keep both hands on the handlebars and both feet on the footrests of the vehicle during operation.

⚠ WARNING

POTENTIAL HAZARD

Skidding or sliding.

WHAT CAN HAPPEN

Skidding or sliding can cause loss of control.

If the tires regain traction unexpectedly, the vehicle could overturn.

HOW TO AVOID THE HAZARD

On slippery surfaces such as ice, travel slowly and use extra caution to reduce the chance of skidding or sliding out of control.

⚠ WARNING

POTENTIAL HAZARD

Failure to use extra caution when operating the vehicle on unfamiliar terrain.

WHAT CAN HAPPEN

Unfamiliar terrain may contain hidden rocks, bumps, or holes that could cause loss of control or overturn.

HOW TO AVOID THE HAZARD

Travel slowly and use extra caution when operating on unfamiliar terrain. Always be alert to changing terrain conditions.

SAFETY
Operator Safety

⚠ WARNING

POTENTIAL HAZARD

Failure to use extra caution when operating on excessively rough, slippery or loose terrain.

WHAT CAN HAPPEN

Operating on excessively rough, slippery or loose terrain could cause loss of traction or loss of control, which could result in an accident or overturn.

HOW TO AVOID THE HAZARD

Do not operate on excessively rough, slippery or loose terrain until you've learned and practiced the skills necessary to control the vehicle on such terrain.

Always use extra caution on rough, slippery or loose terrain.

⚠ WARNING

POTENTIAL HAZARD

Turning improperly.

WHAT CAN HAPPEN

Improper turns could cause loss of control and lead to a collision or overturn.

HOW TO AVOID THE HAZARD

Always follow proper procedures for turning as described in the owner's manual.

Practice turning at slow speeds before attempting to turn at faster speeds.

Never turn at excessive speed.

Operator Safety

⚠ WARNING

POTENTIAL HAZARD

Operating on excessively steep hills.

WHAT CAN HAPPEN

The vehicle may overturn and cause serious injury or death.

HOW TO AVOID THE HAZARD

Never operate on hills too steep for the vehicle or for your abilities. Never operate the Sportsman 6x6 on hills steeper than 15°.

Practice on small hills before attempting larger hills.

⚠ WARNING

POTENTIAL HAZARD

Climbing hills improperly.

WHAT CAN HAPPEN

Improper hill climbing could cause loss of control or overturn.

HOW TO AVOID THE HAZARD

Always follow proper procedures for climbing hills as described in the owner's manual.

Always check the terrain carefully before ascending any hill.

Never climb hills with excessively slippery or loose surfaces.

Shift your weight forward.

Never open the throttle suddenly while traveling uphill. The vehicle could flip over backwards.

Never go over the top of any hill at high speed. An obstacle, a sharp drop, or another vehicle or person could be on the other side of the hill.

SAFETY
Operator Safety

⚠ WARNING

POTENTIAL HAZARD

Traveling downhill improperly.

WHAT CAN HAPPEN

Improperly descending a hill could cause loss of control or overturn.

HOW TO AVOID THE HAZARD

Always follow proper procedures for traveling down hills as described in the owner's manual.

Always check the terrain carefully before descending a hill.

Shift your weight backward.

Never travel down a hill at high speed.

Avoid traveling down a hill at an angle, which would cause the vehicle to lean sharply to one side. Travel straight down the hill when possible.

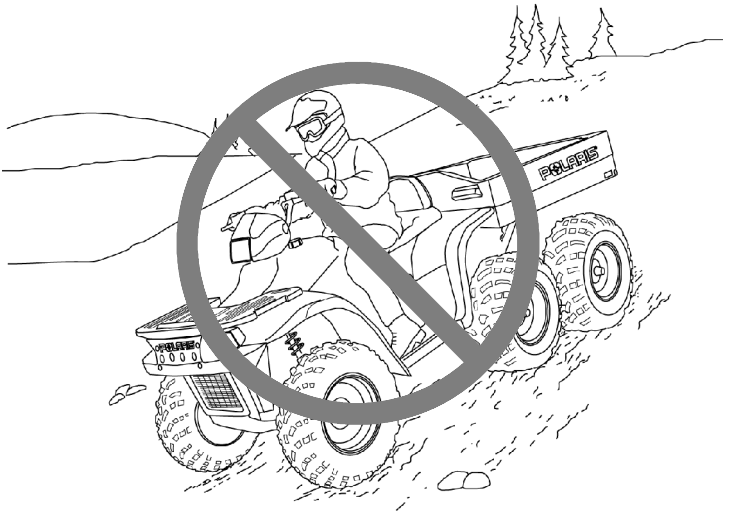

Operator Safety

⚠ WARNING

POTENTIAL HAZARD

Improperly crossing or turning on hills.

WHAT CAN HAPPEN

Improperly crossing or turning as hills could cause loss of control or overturn.

HOW TO AVOID THE HAZARD

Never attempt to turn the Sportsman 6x6 around on any hill until you've mastered the turning technique (on level ground) as described in the owner's manual. See page 62. Use extra caution when turning on any hill.

Avoid crossing the side of a steep hill. If it's unavoidable, always follow proper procedures as described in the owner's manual.

Avoid hills with excessively slippery or loose surfaces.

Shift your weight to the uphill side of the vehicle.

Operator Safety

⚠ WARNING

POTENTIAL HAZARD

Operating over obstacles.

WHAT CAN HAPPEN

Operating over obstacles could cause loss of control or overturn.

HOW TO AVOID THE HAZARD

Before operating in a new area, check for obstacles.

Avoid operating over large obstacles such as rocks and fallen trees. If it's unavoidable, use extreme caution.

⚠ WARNING

POTENTIAL HAZARD

Overloading the vehicle or carrying/towing cargo improperly.

WHAT CAN HAPPEN

Overloading and towing can cause changes in vehicle handling, which could lead to loss of control or an accident.

HOW TO AVOID THE HAZARD

Never exceed the stated load capacity for this vehicle.

Cargo should be properly distributed and securely attached.

Reduce speed when hauling cargo or pulling a trailer. Allow a greater distance for braking.

Always follow the instructions in the owner's manual for carrying cargo or pulling a trailer. See pages 54-55.

Operator Safety

⚠ WARNING

POTENTIAL HAZARD

Operating the vehicle through deep or fast-flowing water.

WHAT CAN HAPPEN

Tires may float, causing loss of traction and loss of control, which could lead to an accident or overturn.

HOW TO AVOID THE HAZARD

Avoid operating the vehicle through deep or fast-flowing water. If it's unavoidable to enter water that exceeds the recommended maximum depth (see page 64), travel slowly, balance your weight carefully, avoid sudden movements, and maintain a slow and steady forward motion. Do not make sudden turns or stops, and do not make sudden throttle changes.

Wet brakes may have reduced stopping ability. Always test the brakes after leaving water. If necessary, apply them several times to let friction dry out the pads.

⚠ WARNING

POTENTIAL HAZARD

Attempting wheelies, jumps and other stunts.

WHAT CAN HAPPEN

Attempting stunts increases the chance of an accident, including an overturn.

HOW TO AVOID THE HAZARD

Never attempt wheelies, jumps, or other stunts. Avoid exhibition driving.

Operator Safety

⚠ WARNING

POTENTIAL HAZARD

Operating this vehicle with improper tires or with improper or uneven tire pressure.

WHAT CAN HAPPEN

Use of improper tires, or operation of the vehicle with improper or uneven tire pressure, could cause loss of control or accident.

HOW TO AVOID THE HAZARD

Always use the size and type of tires specified in the owner's manual Supplement for the vehicle.

Always maintain proper tire pressure.

⚠ WARNING

POTENTIAL HAZARD

Operating the vehicle with improper modifications.

WHAT CAN HAPPEN

Improper installation of accessories or modification of the vehicle may cause changes in handling, which could lead to an accident.

HOW TO AVOID THE HAZARD

Never modify the Sportsman 6x6 through improper installation or use of accessories. All parts and accessories added to the vehicle must be genuine Polaris Industries Inc. or equivalent components designed for use on this vehicle and should be installed and used according to approved instructions. See your authorized Polaris dealer for more information.

Operator Safety

⚠ WARNING

POTENTIAL HAZARD

Operating on frozen bodies of water.

WHAT CAN HAPPEN

Severe injury or death can result if the vehicle and/or the operator fall through the ice.

HOW TO AVOID THE HAZARD

Never operate the vehicle on a frozen body of water.

⚠ WARNING

POTENTIAL HAZARD

Operating the vehicle after consuming alcohol or drugs.

WHAT CAN HAPPEN

Consumption of alcohol and/or drugs could seriously affect operator judgment. Reaction time may be slower and operator balance and perception could be affected.

Consuming alcohol and/or drugs before or while operating the vehicle could result in an accident and cause severe injury or death.

HOW TO AVOID THE HAZARD

Never consume alcohol or drugs before or while operating the vehicle.

SAFETY
Operator Safety

⚠ WARNING

Leaving the keys in the ignition can lead to unauthorized use of the vehicle resulting in serious injury or death. Always remove the ignition key when the vehicle is not in use.

⚠ WARNING

Operating a damaged ATV can result in an accident with serious injury or death. After any overturn or accident, have a qualified service dealer inspect the entire machine for possible damage, including (but not limited to) brakes, throttle and steering systems.

CAUTION

Exposure to hot components could result in a fire. Always keep combustible materials away from the exhaust system.

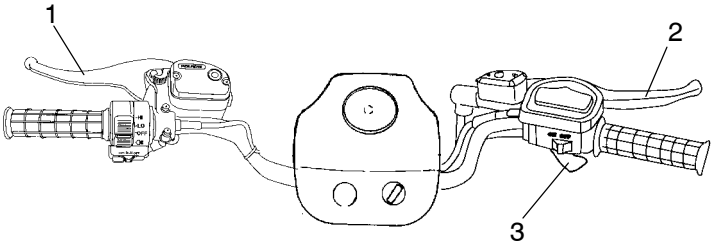

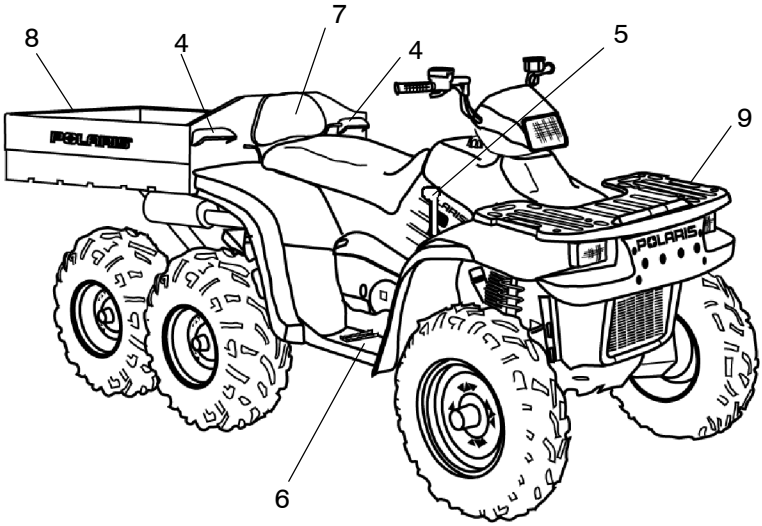

1. Service Brake Lever
2. Middle Axle Auxiliary Brake Lever
3. Throttle Lever
4. Box Dump Latch Release
5. Gear Selector
6. Floorboards
7. Backrest
8. Cargo Box
9. Front Rack

Electrical Switches and Indicators

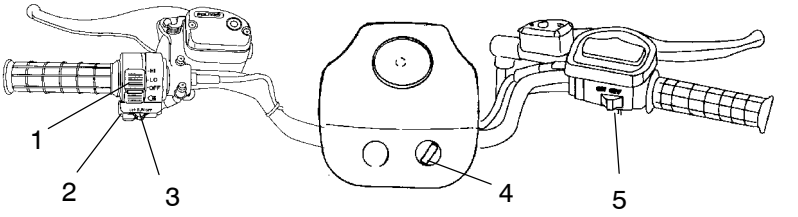

1. **Light Switch/Hi-Lo Beam Control** - The lights won't turn on unless the main switch is on.

⚠ WARNING

Activating the override switch while the throttle is open can cause loss of control, resulting in severe injury or death. Don't activate the override switch while the throttle is open.

2. **Override Switch (Reverse Speed Limiter)** - This vehicle is equipped with a reverse speed limiter system. To obtain additional power while backing, depress the override button. The override switch also allows activation of All Wheel Drive (AWD) in reverse if the AWD switch is on.

3. **Engine Stop Switch** - The engine will not start or run when the switch is off. Its purpose is to provide the operator with a quick means of engine shutdown in case of stuck throttle or other emergency.

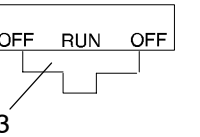

NOTE: Both the main switch and the emergency engine stop switch shut off all electrical power to the entire vehicle, including lights. To stop the engine, slide the stop switch either right or left to the *OFF* position.

4. **Main Switch** - To start the engine, slide the stop switch to the center *RUN* position and turn the main key switch clockwise past the *ON* position. Release the key when the engine starts.

The taillight is on whenever the main switch is on. Turn the key off to prevent battery drain.

5. **All Wheel Drive (AWD) Switch**

Throttle Lever

⚠ WARNING

Do not start or operate a vehicle with sticking or improperly operating throttle controls. Doing so could cause an accident and lead to severe injury or death.

Always contact your dealer for service repairs if throttle problems arise.

Failure to check or maintain proper operation of the throttle system can result in an accident if the throttle lever sticks during operation.

Always check the lever for free movement and return before starting the engine. Also check occasionally during operation.

Engine speed and vehicle movement are controlled by pressing the throttle lever (1). The throttle lever is spring loaded, and engine speed returns to idle when the lever is released.

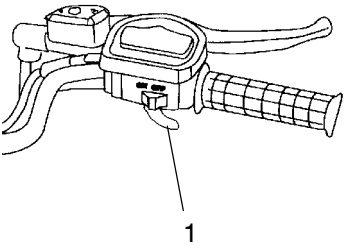

This vehicle is equipped with Polaris Electronic Throttle Control (ETC), which is designed to reduce the risk of a frozen or stuck throttle. If the throttle should stick in an open position, engine RPM will diminish and power to the rear wheels will cease.

⚠ WARNING

The Electronic Throttle Control (ETC) stops the engine in the event of a throttle system malfunction and is provided for your safety. Do not attempt to modify the ETC system or replace it with any after market throttle mechanisms.

Brakes

The braking system is controlled by the two brake levers located on the handlebars, directly in front of each handgrip.

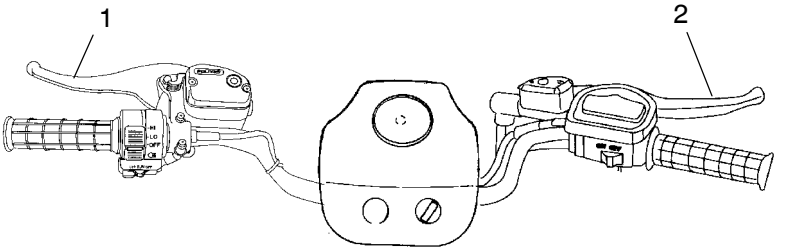

Service Brakes

The service brake lever (1) is located on the left handlebar. This lever controls both front and rear wheel braking action. Use this lever for normal braking.

Apply the service brakes by squeezing the left brake lever toward the handlebar. These brakes are hydraulically activated disc brakes.

Always test brake lever travel and check the reservoir fluid level before riding. The lever should feel firm when squeezed. Any sponginess would indicate a possible fluid leak or low master cylinder fluid level, which must be corrected before operating. See your dealer for proper diagnosis and repairs.

Auxiliary Brakes

The auxiliary brake lever (2) is located on the right handlebar. It controls braking action for the middle axle (rear brake) only. Use the auxiliary brakes for additional braking or if the service brake system fails.

⚠ WARNING

Operating the vehicle with a spongy brake lever can result in loss of brakes, which could cause an accident and lead to serious injury or death. Never operate the vehicle with a spongy-feeling brake lever.

Brakes

Master Cylinders

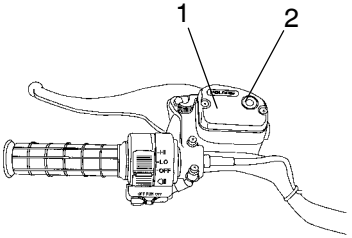

The master cylinders (1) are located on the left and right handlebars. Check fluid levels before each use of the ATV.

View the fluid level through the indicator window (2) on the top of the master cylinder. This *eye* will appear dark when the fluid level is full. When fluid is low, the eye will be clear.

NOTE: When checking the fluid level, position the ATV on level ground with the handlebars turned so the top of the reservoir is level. If the fluid level is low, add DOT 3 brake fluid. DO NOT OVERFILL. See page 113 for the part numbers of Polaris products.

⚠ WARNING

An over-full master cylinder may cause brake drag or brake lock-up, which could result in serious injury or death. Maintain brake fluid at the recommended level. Do not overfill.

⚠ WARNING

Never store or use a partial bottle of brake fluid. Brake fluid is hygroscopic, meaning it rapidly absorbs moisture from the air. The moisture causes the boiling temperature of the brake fluid to drop, which can lead to early brake fade and the possibility of accident or severe injury. After opening a bottle of brake fluid, always discard any unused portion.

Parking Brake

⚠ WARNING

Operating the vehicle while the parking brake is engaged could result in an accident and serious injury or death. Always check to be sure the parking brake is disengaged before operating.

Setting the Parking Brake

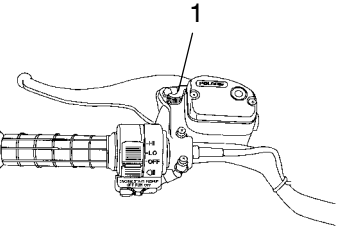

1. Squeeze and release the left brake lever two or three times, then squeeze and hold.
2. Push the park brake lock (1) forward to engage the brake. Release the brake lever.
3. To release the parking brake lock, squeeze and release the brake lever. It will return to its unlocked position.

Important Safeguards

- The parking brake may relax if left on for a long period of time. Always block the wheels to prevent rolling.
- Always block the wheels on the downhill side of the vehicle if leaving it parked on a hill. Another option is to park the vehicle in a sidehill position.
- Never depend on the parking brake alone for more than five minutes if the vehicle is parked on a hill. Always block the wheels to prevent rolling.

Fuel Valve

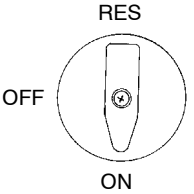

The fuel valve (1) is located on the left side panel. It has three positions:

OFF: For vehicle storage and when transporting.

ON: For normal operation.

RES: For reserve supply if main supply is exhausted.

There's about a 7 to 10 mile (11.2 to 16 km) range on the reserve supply. Always refill the gas tank as soon as possible after using the main supply. Always return the valve to the *ON* position after refueling.

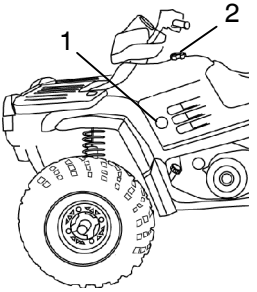

Fuel Tank

The fuel tank filler cap (2) is located directly below the handlebar. Use either leaded or unleaded gasoline with a minimum pump octane number of 87=(R+ M/2).

Gear Selector

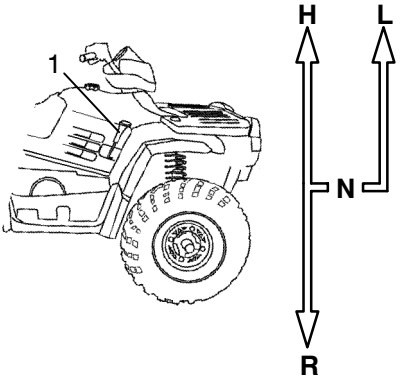

The transmission gear selector (1) is located on the right side of the vehicle directly above and forward of the engine recoil starter.

To change gears, stop the vehicle, and with the engine idling, move the lever to the desired gear. Do not attempt to shift gears with engine speed above idle or while the vehicle is moving.

Always place the transmission in gear with the parking brake locked whenever the vehicle is left unattended.

Maintaining shift linkage adjustment is important to assure proper transmission function. See your dealer if you experience any shifting problems.

CAUTION

Shifting gears with the engine speed above idle or while the vehicle is moving could cause transmission damage.

To change gears, stop the vehicle, and with the engine idling, move the lever to the desired gear.

Belt Life

To extend belt life, use low forward gear in heavy pulling situations and when operating at less than seven miles per hour for extended periods of time.

Recoil Starter

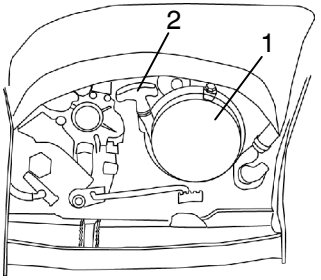

If the battery has been drained or damaged and cannot start the engine, use of the recoil starter (1) will allow vehicle operation until repairs can be made. The recoil starter is located on the right side of the machine.

Polaris 4-cycle engines are equipped with automatic decompressors. This makes recoil starting possible by reducing the amount of compression during starting. The decompressor senses when the engine is spinning fast enough to start and restores compression when running.

1. Position the vehicle on a level surface and lock the parking brake (see page 38).
2. Shift the transmission into neutral.
3. Make sure the engine stop switch is set to RUN and the main key switch is in the ON position.

NOTE: If the engine is cold, use the choke as outlined on page 52.

4. Grasp the recoil starter rope handle (2) firmly and pull slowly so you can feel the engine strokes.

NOTE: Every other stroke will be a “compression stroke” and will make the rope harder to pull. When a compression stroke is found, continue pulling the rope just until the engine rolls past the stroke, then *stop pulling immediately*.

5. Allow the recoil rope to rewind into the recoil assembly, then pull the rope abruptly and forcefully to start the engine.
6. Repeat steps 4-5 if necessary.

CAUTION

Extending the recoil starter rope until it stops can cause damage to the recoil assembly. Do not extend the starter rope so far that it stops.

If the starter rope handle is not seated properly, water may enter the recoil housing and damage components. Make sure the handle is fully seated on the recoil housing, especially when traveling in wet areas.

FEATURES AND CONTROLS
All Wheel Drive (AWD) System

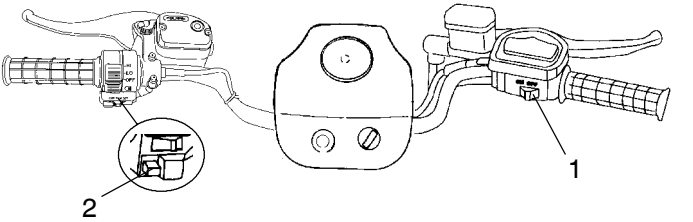

The Polaris Sportsman 6x6 is equipped with a unique AWD system activated by the AWD switch (1) on the right handlebar. When the switch is off, the vehicle is in rear wheel drive at all times. When the switch is on, the vehicle is in AWD and the front wheels will automatically engage any time the rear wheels lose traction. When the rear wheels regain traction, the front wheels will automatically disengage.

NOTE: The override switch (2) allows activation of AWD in reverse if the AWD switch is on.

There is no limit to the length of time the vehicle may remain in AWD.

The AWD switch may be turned on or off while the vehicle is moving. If the switch is turned off when the front hubs are driving, they will not release until the rear wheels regain traction.

CAUTION

Switching to AWD while the rear wheels are spinning may cause severe drive shaft and hub damage. Always switch to AWD while the rear wheels have traction or are at rest.

All Wheel Drive (AWD) System

Disengaging Wheel Hubs

The hubs normally disengage when operating in reverse. However, one or both hubs may occasionally remain engaged. If the handlebars pull to one side, one front hub is engaged. If both hubs are engaged, steering effort increases but remains balanced from left to right, and vehicle speed is somewhat restricted.

Disengage the hubs by stopping, shifting to reverse, and backing for a short distance. Then proceed in forward again.

NOTE: If the hubs remain engaged after following this procedure, return the vehicle to your dealer for service.

To continue using AWD while operating in reverse, activate both the override switch and the AWD switch. See page 34.

⚠ WARNING

Operating with only one front hub engaged could result in loss of control, accident, and severe injury or death. When hub engagement symptoms are present, use the disengaging procedure before proceeding.

FEATURES AND CONTROLS
Instrument Cluster

Your ATV is equipped with an instrument cluster that senses vehicle speed from the right front wheel. The instrument cluster measures distance in miles or kilometers as well as hours of operation. It also includes a reverse speed limiter function that limits the ATV's speed to approximately 7-9 mph. Refer to page 34 for additional information.

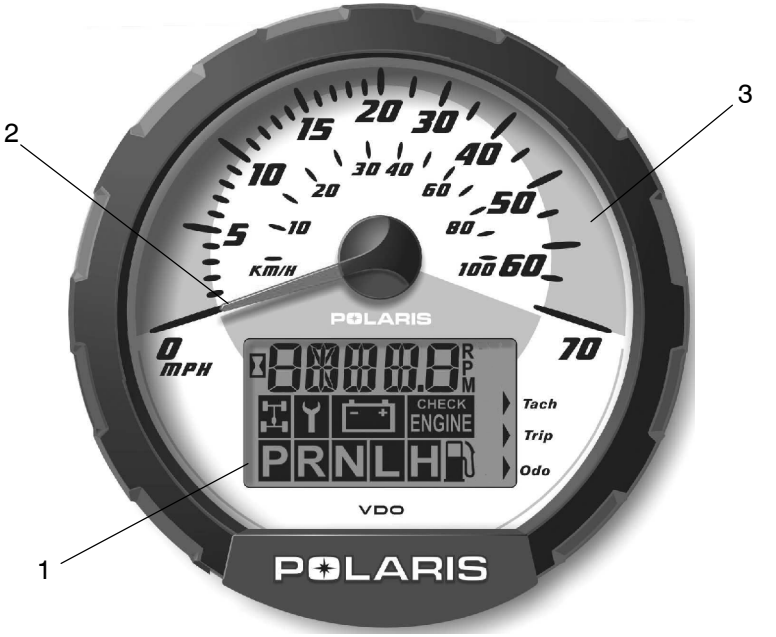

1. Rider Information Center
2. Speedometer needle - in addition to showing vehicle speed, the needle flashes when a warning condition exists.
3. Speedometer

CAUTION

To prevent damage, wash the ATV by hand or with a garden hose using mild soap. Do not use alcohol to clean the instrument cluster. Immediately clean off any gasoline that splashes on the instrument cluster. Do not allow insect sprays to come into contact with the lens.

Instrument Cluster

Rider Information Center

The rider information center is located in the instrument cluster. All segments will light up for 2.5 seconds at start-up.

NOTE: If the instrument cluster fails to illuminate, a battery over-voltage may have occurred and the instrument cluster may have shut off to protect the cluster's electrical system. If this occurs, take the ATV to your Polaris dealer for proper diagnosis.

1. **Gear Indicator -** As the shift lever is moved, this indicates the gear the transmission is in:
   H = High Range
   L = Low Range
   N = Neutral
   R = Reverse
   P = Park
2. **AWD Indicator -** This indicator illuminates when the electrical portion of the AWD system is enabled.
3. **Engine Hour Display Indicator**
4. **Service Interval/Diagnostic Mode Indicator**
5. **Low Battery and Over Voltage -** This warning usually indicates that the ATV is being operated at an RPM too low to keep the battery charged. A low battery warning may also occur under normal operation if the machine is at idle and high electrical load (lights, cooling fan, accessories) is applied. Driving at a higher RPM or connecting a battery charger will usually clear the warning.
6. **Odometer/Tachometer/Tripmeter/ Hour Meter**
7. **Check Engine Warning Indicator -** The word HOT will display alphanumerically when the engine is overheating. Do not continue to operate the ATV if this warning appears or serious engine damage could result.
8. **Mode Indicator**

Instrument Cluster

Rider Information Center

The rider information center has 4 standard modes:

Mode 1 - Odometer

Mode 2 - Tripmeter

Mode 3 - Total Service Hours

Mode 4 - Tachometer

The reverse override button on the left handlebar is also the *mode button*.

NOTE: If using the mode button to program the rider information center, or to toggle through the options, the machine cannot be in reverse.

Mode 1 - Odometer

The odometer records the miles traveled by the ATV.

Mode 2 -Trip Meter

The trip meter records the miles traveled by the ATV on each trip if it's reset before each trip. To reset the trip meter, select the trip meter mode. Press and hold the mode button (override button) until the total changes to *0*.

NOTE: In the Rider Information Center, the trip meter display contains a decimal point, but the odometer displays without a decimal point.

Mode 3 - Hour Meter

This mode logs the total hours the engine has been in operation.

Mode 4 - Tachometer

The engine RPM is displayed digitally.

NOTE: Small fluctuations in the RPM from day to day may be normal because of changes in humidity, temperature, elevation and electrical loads.

Instrument Cluster

Rider Information Center

Diagnostic Mode

The diagnostic mode is for informational purposes only. Please return your ATV to your dealer for all major repairs.

As long as the gauge is in the diagnostic mode, the wrench icon will remain lit.

To leave the diagnostic mode, either shift the machine out of neutral or turn the key switch off and on.

NOTE: Any movement of the tires will also take the machine out of the diagnostic mode.

To enter the diagnostics mode:

1. Turn the key switch off and wait 10 seconds.
2. Set the park brake and shift the transmission to neutral.
3. Hold the mode/reverse override button and turn the key switch on.
4. Release the switch as soon as the display is activated.

The initial screen display refers to the software version installed in your ATV. This information is displayed briefly.

Use the mode/reverse override button to toggle through the diagnostic screens.

Screen 1: Battery voltage

Screen 2: Tachometer

Screen 3: AWD diagnostic

This gauge indicates whether or not current is flowing through the AWD coil (only on models with switchable AWD).

Screen 4: Gear circuit diagnostic

This screen displays the resistance value (in ohms) being read at the gear switch input of the gauge.

Rider Information Center

Diagnostic Mode

Screen 5: Programmable service interval

The purpose of the programmable service interval is to provide the consumer and dealer with a convenient reminder for routine maintenance. When your vehicle leaves the factory, this feature is set at 50 hours. You must enable the programmable service interval before it can be used.

Once the service interval mode is set with the hours when service is due, the hours of actual engine operation are subtracted from the set hours until *0* is reached. When the counter reaches *0*, the wrench icon will flash quickly for 5 seconds each time the vehicle is started as a reminder that the periodic maintenance is due.

To set the hours, press and hold the mode/override button until the wrench icon flashes. When it begins to flash, release the button. The setting will increase by one hour each time the button is pressed. Pressing and holding the button will allow the numbers to escalate much faster. When the desired time increment is displayed, release the button and wait for the wrench to stop flashing. When the wrench stops blinking, your service hours are set.

NOTE: If you scroll past the intended number, hold the button down until the count turns over to *0*. You can then reset the number.

If the service interval is enabled on your ATV and you wish to turn it off, toggle to the service interval mode. Press and hold the mode button for approximately 7 seconds until the word *OFF* appears in the Rider Information Center.

Screen 6: Miles/Kilometers toggle

The display in the tripmeter and odometer can be changed to display either kilometers or miles. The current display mode will be shown as KM or MP. To change, hold in the mode button until the letters flash, then press and release the button once. When the display stops flashing, the mode has been set.

Fuel Safety

⚠ WARNING

Gasoline is highly flammable and explosive under certain conditions.

- Always exercise extreme caution whenever handling gasoline.
- Always refuel outdoors or in a well ventilated area with the engine stopped.
- Do not smoke or allow open flames or sparks in or near the area where refueling is performed or where gasoline is stored.
- Do not overfill the tank. Do not fill the tank neck.
- If gasoline spills on your skin or clothing, immediately wash it off with soap and water and change clothing.
- Never start the engine or let it run in an enclosed area. Gasoline powered engine exhaust fumes are poisonous and can cause loss of consciousness and death in a short time.
- Turn the fuel valve off whenever the vehicle is stored or parked.

⚠ WARNING

The engine exhaust from this product contains chemicals known to cause cancer, birth defects or other reproductive harm.

Operate this vehicle only outdoors or in well-ventilated areas.

OPERATION

Vehicle Break-in Period

The break-in period for your new Polaris Sportsman 6x6 is defined as the first ten hours of operation or the time it takes to use the first two tanks of gasoline. No single action on your part is as important as following procedures for a proper break-in period. Careful treatment of a new engine will result in more efficient performance and longer life for the engine. Perform the following procedures carefully.

CAUTION

Excessive heat build-up during the first three hours of operation will damage close-fitted engine parts. Do not operate at full throttle or high speeds for extended periods during the first three hours of use.

Use of oils other than those recommended by Polaris may cause serious engine damage. Always use the recommended oil.

Lack of proper lubrication will cause serious engine damage. Always check the oil level when refueling the vehicle.

1. Fill the fuel tank with either unleaded or leaded fuel that has a minimum pump octane number of 87= (R+ M)/2.
2. Check the oil reservoir level indicated on the dipstick. Add the recommended oil as needed to bring the level within the normal range (1).

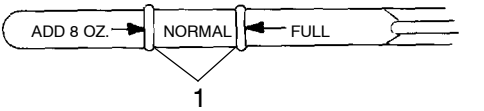

3. Drive slowly at first. Select an open area that will allow room to familiarize yourself with vehicle operation and handling.
4. Vary the throttle positions.
5. Perform regular checks on fluid levels, controls, and areas outlined on the daily pre-ride inspection checklist. See page 51.
6. Pull only light loads during the break-in period.
7. Perform a break-in oil change at 20 hours or one month, whichever comes first.

Pre-Ride Inspection

⚠ WARNING

If a proper inspection is not done before each use, severe injury or death could result. Always inspect the vehicle before each use to ensure it's in proper operating condition.

Pre-Ride Checklist		
Item	**Remarks**	**See Page**
Brake system / lever travel	Ensure proper operation	36, 88, 89
Brake fluid	Ensure proper level	37
Auxiliary brake	Ensure proper operation	36
Front suspension	Inspect, lubricate if necessary	74
Rear suspension	Inspect, lubricate if necessary	74
Steering	Ensure free operation	–
Tires	Inspect condition and pressure	95, 96
Wheels / fasteners	Inspect, ensure fastener tightness	96
Frame nuts, bolts, fasteners	Inspect, ensure tightness	–
Fuel and oil	Ensure proper levels	79
Coolant level (if applicable)	Ensure proper level	–
Coolant hoses (if applicable)	Inspect for leaks	–
Throttle	Ensure proper operation	35, 89
Indicator lights / switches	Ensure operation	34
Engine stop switch	Ensure proper operation	34
Drive chain	Check condition / slack, lubricate as needed	90, 91
Air filter, pre-filter	Inspect, clean	84
Air box sediment tube	Drain deposits whenever visible	–
Headlamp	Check operation, apply Polaris dielectric grease when lamp is replaced	105
Brake light / tail lamp	Check operation, apply Polaris dielectric grease when lamp is replaced	108
Dump box latch	Check condition and operation of the mechanism	–
Riding gear	Wear helmet, goggles, protective clothing	12

OPERATION
Starting a Cold Engine

⚠ WARNING

Carbon monoxide exhaust gas is poisonous and can cause severe injury or death. Never run an engine in an enclosed area.

CAUTION

Operating the vehicle immediately after starting could cause engine damage. Allow the engine to warm up for several minutes before operating the vehicle.

1. Place the transmission in neutral and lock the parking brake. Make sure the fuel tank valve is on.
2. Sit on the vehicle and pull the choke knob (1) out until it stops. The variable choke is fully on when the knob is pulled completely out. The choke is off when the knob is pushed completely in. The choke can be adjusted gradually, depending on how much choke is needed for starting. Be sure the choke is off during operation, as excess fuel washing into the engine oil will increase wear on engine components.

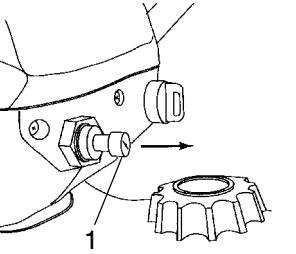

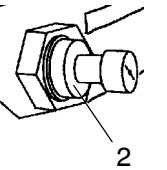

NOTE: If the knob doesn't stay where positioned, increase the tension by rotating the tension adjusting nut (2) clockwise.

3. Turn the engine stop switch to *RUN*.

NOTE: Do not press the throttle while starting the engine.

4. Turn the ignition key past the *ON* position to engage the starter. Activate the starter for a maximum of five seconds, releasing the switch when the vehicle starts. If the engine does not start, release the starter and wait five seconds. Then activate the starter for another five seconds. Repeat this procedure until the engine starts.
5. If the engine slows or stops, position the choke knob half way in to allow proper engine warm up.
6. Vary the engine RPM slightly with the throttle to aid in warm-up. When the engine idles smoothly, push the choke completely in.

Starting a Warm Engine

Warm engines do not normally require the use of the choke. Excessive use of the choke can cause the spark plug to become wet fouled.

1. Position the vehicle on a level surface with the transmission in neutral.
2. Lock the parking brake, turn the fuel tank valve to *ON, s*it on the vehicle, and move the engine stop switch to *RUN*.
3. If the engine has cooled to a point where it does not readily start, intermittent use of the choke button (pulled half way out) may be necessary.
4. If the engine is over-choked when warm, depress the throttle lever fully while cranking to aid in starting.
5. Release the throttle lever immediately after the engine starts. If the engine does not start and all conditions are favorable, change the spark plug and try again.

OPERATION

Hauling Cargo

Your Sportsman 6x6 has been designed to carry or tow a certain amount of load. Always read and understand the load distribution warnings on the warning labels. Never exceed the specified weights.

⚠ WARNING

Overloading the vehicle or carrying or towing cargo improperly can alter vehicle handling and may cause loss of control or brake instability.

- Never exceed the stated load capacity for this vehicle.
- Do not obstruct the headlight when loading the front rack.
- Cargo should be properly distributed and carried as low and forward in the cargo box as possible.
- Reduce speed and allow a greater distance for braking.
- Use extreme caution when applying brakes with a loaded vehicle. Avoid terrain or situations that may require backing downhill.
- Always attach the tow load to the hitch point.
- Do not tow any trailer on a grade steeper than 15°.
- Vehicle should never exceed 10 mph (16 kph) while towing a load on a level surface. Vehicle speed should never exceed 5 mph (8 kph) when towing loads in rough terrain, while cornering, or while ascending or descending a hill.

Maximum Cargo Capacities (Level Ground)	
Total Cargo	875 lbs. (397 kg)
Front Rack Cargo	75 lbs. (34 kg)
Cargo Box	800 lbs. (363 kg)

Maximum Towing Capacities	
Towed Load (level ground)	1500 lbs. (681 kg)
Towed Load (up to 15° incline)	850 lbs. (386 kg)
Vertical Hitch Weight	150 lbs. (68.1 kg)
Towing Grade	15°

Hauling Cargo

Dumping Cargo

1. Select a level site to dump the cargo box. Do not attempt to dump or unload the vehicle while parked on an incline.
2. Set the parking brake.
3. Dismount the vehicle.
4. Pull the cargo box release lever forward.
5. Lift the front of the cargo box and dump the cargo.

WARNING

If the weight distribution in the box is located toward the rear of the box when the release lever is pulled forward, the box may dump on its own, which could cause serious injury. Never operate the dump lever without checking the position of the load. This will prevent unexpected dumping of the cargo box. Never carry passengers in the cargo box.

Load Distribution

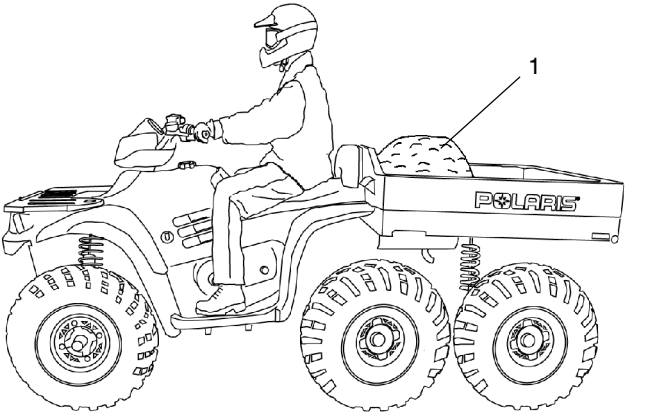

1. Never exceed the maximum capacities for hauling cargo as stated on the load distribution warning labels and on page 54.
2. Always load the cargo box with the load (1) as far forward as possible.
3. Always operate the vehicle with extreme caution whenever hauling or towing loads. Balance, handling and control may be affected.
4. Slow down.
5. The cargo box dump latch must be securely latched before loading and operating. Unintentional box tilting will result if weight is placed in the rear of the box and the latch is not secured.

⚠ WARNING

Operating with the cargo box in the raised position can cause serious injury and damage to the vehicle. The cargo box could close unexpectedly and injure the driver. The rear tires will also catch the rear of the box, damaging the vehicle and creating hazardous driving conditions.

Never operate this vehicle with the cargo box in the raised position.

Driving Safely

Driving Procedures

1. Sit upright with both feet on the footrests and both hands on the handlebars.
2. After starting the engine and allowing it to warm up, shift the transmission into gear.
3. Check your surroundings and determine your path of travel.
4. Release the parking brake.
5. Slowly depress the throttle with your right thumb and begin driving. Vehicle speed is controlled by the amount of throttle opening. PVT shifting is automatic.
6. Drive slowly. Practice maneuvering and using the throttle and brakes on level surfaces.

OPERATION
Driving Safely
Making Turns

Practice making turns at slow speeds.

The Sportsman 6x6 is equipped with a solid rear axle that drives all rear wheels equally at all times. This means that the wheel on the outside of the turn must travel a greater distance than the inside wheel when turning, and the inside tire must slip traction slightly.

To turn, steer in the direction of the turn, leaning your upper body to the inside of the turn while supporting your weight on the outer footrest. This technique alters the balance of traction between the rear wheels, allowing the turn to be made smoothly. The same learning technique should be used for turning in reverse.

⚠ WARNING

Turning at sharp angles in reverse can result in tipover and serious injury. Avoid turning at sharp angles while operating in reverse.

Driving Safely

Sidehilling

⚠ WARNING

Improperly crossing hills or turning on hills can result in loss of control or vehicle overturn, resulting in severe injury or death. Avoid crossing the side of a hill.

Sidehilling can be a dangerous type of driving and should be avoided if at all possible. If you do enter into a situation where sidehilling is necessary, follow these precautions:

1. Slow down.
2. Lean into the hill, transferring your upper body weight toward the hill while keeping your feet on the footrests.
3. Steer slightly into the hill to maintain vehicle direction.

NOTE: If the vehicle begins to tip, quickly turn the front wheel downhill, if possible, or dismount on the uphill side *immediately!*

OPERATION
Driving Safely
Driving Downhill

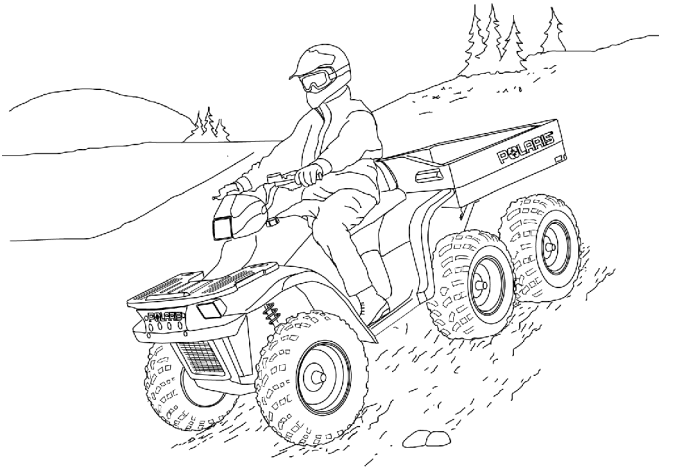

Whenever descending a hill, follow these precautions:

1. Drive directly downhill.
2. Transfer your weight to the rear of the vehicle.
3. Slow down.
4. Apply the brakes *slightly* to aid in slowing.

⚠ WARNING

Hard use of the braking system while descending a hill could result in a front-end overturn, causing serious injury or death. Always operate the brakes *slightly* when descending a hill.

Excessive speed can cause loss of control and lead to serious injury or death. Always operate slowly when traveling downhill.

Driving Safely

Driving Uphill

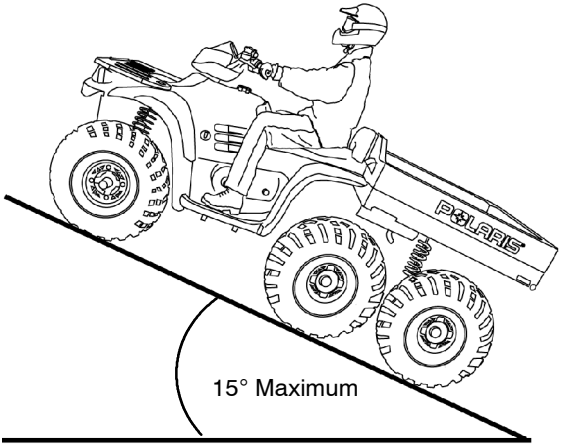

Whenever traveling uphill, follow these precautions:

1. Always travel straight uphill.
2. Avoid steep hills.
3. Keep both feet on the footrests.
4. Transfer your weight forward.
5. Proceed at a steady rate of speed and throttle opening.
6. Remain alert and be prepared to take emergency action. This may include quick dismounting of the vehicle.

⚠ WARNING

Braking and handling are greatly affected when operating in hilly terrain. Improper procedure could cause loss of control or overturn and result in serious injury or death.

Avoid climbing steep hills (15° maximum).

Use extreme caution when operating on hills, and follow proper operating procedures outlined in the owner's manual.

Turning Around on a Hill

⚠ WARNING

Improper hill climbing procedures could cause loss of control or overturn and result in serious injury or death.

Avoid climbing steep hills (15° maximum).

Use extreme caution when operating on hills, and follow proper operating procedures outlined in the owner's manual.

If the vehicle stalls while climbing a hill, never back it down the hill! One maneuver that can be used when it's necessary to turn around while climbing a hill is the K-turn:

1. Stop and lock the parking brake while keeping body weight uphill.
2. Leave the transmission in forward and shut off the engine.
3. Dismount on the left (always uphill) side of the vehicle.
4. Staying uphill of the vehicle, turn the handlebars full left.
5. While holding the service brake, release the parking brake lock and slowly allow the vehicle to roll around to your right until it's pointing across the hill or slightly downward.
6. Lock the parking brake and remount the vehicle from the uphill side, keeping body weight uphill.
7. Restart the engine with the transmission still in forward.
8. Release the parking brake and proceed *slowly*, controlling speed with the service brake, until the vehicle is on more level ground.

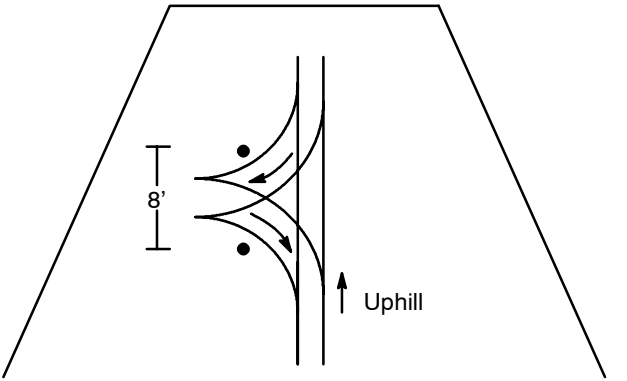

Driving Safely

Driving on Slippery Surfaces

Whenever operating on slippery surfaces, such as wet trails or loose gravel, or during freezing weather, follow these precautions:

1. Slow down when entering slippery areas.
2. Maintain a high level of alertness, reading the trail and avoiding quick, sharp turns, which can cause skids.

NOTE: Correct a skid by turning the handlebars in the direction of the skid and shifting your body weight forward. Never brake during a skid.

3. Drive with AWD engaged to assist in controlling the vehicle in slippery areas.

CAUTION

Severe damage to the drive train may occur if the AWD is engaged while the wheels are spinning. Activate the AWD switch only when the rear wheels have traction.

⚠ WARNING

Failure to exercise care when operating on slippery surfaces can result in loss of tire traction and cause loss of control, accident, and serious injury or death.

Never apply the brakes during a skid.

Do not operate on excessively slippery surfaces.

Always reduce speed and use additional caution when operating on slippery surfaces.

OPERATION
Driving Safely
Driving Through Water

Your Sportsman 6X6 can operate through water with a maximum recommended depth equal to the footrests (1). Avoid operating the ATV through deep or fast-flowing water. If you cannot avoid water that exceeds the recommended maximum depth, go slowly, balance your weight carefully, avoid sudden movements, and maintain a slow and steady forward motion. Do not make sudden turns or stops, and do not make sudden throttle changes.

Follow these procedures when operating through water:

1. Determine water depths and current before crossing.
2. Choose a crossing where both banks have gradual inclines.
3. Proceed slowly, avoiding rocks and obstacles if possible.
4. After crossing, dry the brakes by applying light pressure to the lever until braking action is normal.

NOTE: After running the vehicle in water, it's *critical* to have it serviced as outlined in the maintenance schedule beginning on page 70. The following areas need special attention: engine oil, transmission oil, front and rear gearcases, and all grease fittings.

CAUTION

Major engine damage can result if the vehicle is not thoroughly inspected after becoming immersed. If your vehicle becomes immersed or is operated in water that exceeds the footrest level, take it to your dealer for service before starting the engine.

Driving Safely

Driving in Reverse

This vehicle is equipped with a reverse speed limiter. The override button should be used with caution as rearward vehicle speed is greatly increased. Do not operate at wide open throttle. Open the throttle just enough to maintain a desired speed.

Follow these precautions when operating in reverse:

1. Always avoid backing downhill.
2. Back slowly.
3. When in reverse, apply the brakes *lightly* for stopping.
4. Avoid turning at sharp angles in reverse.
5. Never open the throttle suddenly while backing.
6. Never activate the override button while the throttle is open. Loss of control may result.

CAUTION

Opening the throttle more than required may cause fuel to build in the exhaust, resulting in engine popping and/or engine damage.

⚠ WARNING

Failure to use caution when operating in reverse can result in serious injury or death. Before shifting into reverse gear, always check for obstacles or people behind the vehicle. When it's safe to proceed, back slowly.

Do not use the override switch unless additional power is required for vehicle movement.

Avoid backing on inclines.

Avoid turning at sharp angles in reverse.

Parking On An Incline

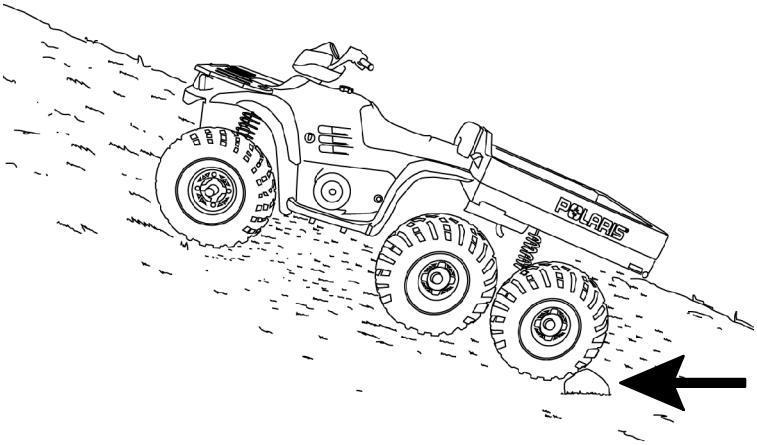

Avoid parking on an incline if possible. If it's unavoidable, follow these precautions:

1. Place the transmission in gear and set the parking brake.
2. Always block the rear wheels on the downhill side. See illustration.
3. Shut off the fuel supply.

Driving Safely

Driving Over Obstacles

Keep alert! Look ahead and learn to read the terrain you're traveling on. Be constantly alert for hazards such as logs, rocks and low hanging branches.

⚠ WARNING

Severe injury or death can result if your vehicle comes in contact with a hidden obstacle. Not all obstacles are immediately visible. Travel with caution in unfamiliar terrain.

EMISSION CONTROL SYSTEMS

Noise Emission Control System

Do not modify the engine, intake or exhaust components, as doing so may affect compliance with state and local noise level requirements.

Spark Arrestor

Your Polaris vehicle has a spark arrestor that was tested and approved in accordance with the USDA Forest Service Standard 5100-1C. Federal law requires that this spark arrestor be installed and functional when the vehicle is operated on public lands.

Crankcase Emission Control System

This engine is equipped with a closed crankcase system. Blow-by gases are forced back to the combustion chamber by the intake system. The system does not allow the blow-by gases to enter the atmosphere.

Exhaust Emission Control System

The emissions from the exhaust of this vehicle are controlled by engine design, including factory-set fuel delivery and ignition. The engine and related components must be maintained at Polaris specifications to achieve optimal performance.

Adjustment to engine idle is the only adjustment Polaris recommends that the operator perform. Any other adjustments should be performed by an authorized Polaris dealer.

The emissions label (1) is located on the recoil cover.

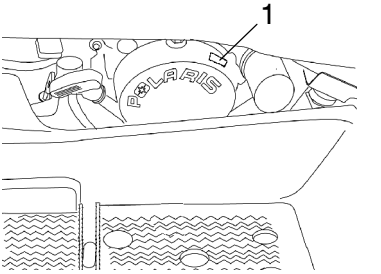

Electromagnetic Interference

This spark ignition system complies with Canadian ICES-002.

Tool Kit

To help you perform routine maintenance, a tool kit is provided in the storage compartment under the seat. Items included in the kit are:

- Screwdriver
- Open end wrench (8-10 mm)
- Open end wrench (12-14 mm)
- Box end wrench
- Tire pressure gauge
- Spark plug wrench and handle
- Torx wrench (rack removal)

Accessories

Polaris has a wide variety of accessories for your vehicle. Contact your Polaris dealer for a complete list.

The addition of certain accessories, including (but not limited to) mowers, blades, tires, sprayers, or large racks may change the handling characteristics of the vehicle. Be sure any accessories added to the vehicle have been approved by Polaris. Familiarize yourself with their function and effect on the vehicle.

MAINTENANCE AND LUBRICATION

Periodic Maintenance Chart

Careful periodic maintenance will help keep your vehicle in the safest, most reliable condition. Inspection, adjustment and lubrication of important components are explained in the periodic maintenance chart.

Inspect, clean, lubricate, adjust and replace parts as necessary. When inspection reveals the need for replacement parts, use genuine Polaris parts available from your Polaris dealer.

NOTE: Service and adjustments are critical. If you're not familiar with safe service and adjustment procedures, have a qualified dealer perform these operations.

Maintenance intervals in the following chart are based upon average riding conditions and an average vehicle speed of approximately 10 miles per hour. Vehicles subjected to severe use must be inspected and serviced more frequently.

Severe Use Definition

- Frequent immersion in mud, water or sand
- Racing or race-style high RPM use
- Prolonged low speed, heavy load operation
- Extended idle
- Short trip cold weather operation

Pay special attention to the oil level. A rise in oil level during cold weather can indicate contaminants collecting in the oil sump or crankcase. Change oil immediately if the oil level begins to rise. Monitor the oil level, and if it continues to rise, discontinue use and determine the cause or see your dealer.

Maintenance Chart Key

▶ Perform these procedures more frequently for vehicles subjected to severe use.

E Emission Control System Service (California)

■ Have an authorized Polaris dealer perform these services.

⚠ WARNING

Improperly performing the procedures marked with a ■ could result in component failure and lead to serious injury or death. Have an authorized Polaris dealer perform these services.

Periodic Maintenance Chart

Perform all services at whichever maintenance interval is reached first.

	Item	Maintenance Interval (whichever comes first)			Remarks
		Hours	Calendar	Miles (Km)	
■	Steering	-	Pre-Ride	-	Make adjustments as needed. See Pre-Ride Checklist on page 51.
▶	Front suspension	-	Pre-Ride	-	
▶	Rear suspension	-	Pre-Ride	-	
	Tires	-	Pre-Ride	-	
▶	Brake fluid level	-	Pre-Ride	-	
▶	Brake lever travel	-	Pre-Ride	-	
	Brake systems	-	Pre-Ride	-	
	Wheels/fasteners	-	Pre-Ride	-	
	Frame fasteners	-	Pre-Ride	-	
▶ E	Engine oil level	-	Pre-Ride	-	
▶ E	Air filter, pre-filter	-	Daily	-	Inspect; clean often
▶ E	Air box sediment tube	-	Daily	-	Drain deposits when visible
	Coolant (if applicable)	-	Daily	-	Check level daily, change coolant every 2 years
	Headlamp/tail lamp	-	Daily	-	Check operation; apply dielectric grease if replacing
▶ E	Air filter, main element	-	Weekly	-	Inspect; replace as needed
	Recoil housing	-	Weekly	-	Drain water as needed, check often if operating in wet conditions
▶ ■	Brake pad wear	10 H	Monthly	60 (100)	Inspect periodically
	Battery	20 H	Monthly	125 (200)	Check terminals; clean; test
▶	Front gearcase oil (if equipped)	25 H	Monthly	155 (250)	Inspect level; change yearly
▶	Middle gearcase oil (if equipped)	25 H	Monthly	155 (250)	Inspect level; change yearly
▶	Rear gearcase oil (if equipped)	25 H	Monthly	155 (250)	Inspect level; change yearly
▶	Transmission oil	25 H	Monthly	155 (250)	Inspect level; change yearly

▶ Perform these procedures more often for vehicles subjected to severe use.
E Emission Control System Service (California)
■ Have an authorized Polaris dealer perform these services.

MAINTENANCE AND LUBRICATION
Periodic Maintenance Chart

	Item	Maintenance Interval (whichever comes first)			Remarks
		Hours	Calendar	Miles (Km)	
▶ E	Engine breather filter (if equipped)	25 H	Monthly	155 (250)	Inspect; replace if necessary
▶ E	Engine oil change (break-in)	25 H	1 M	155 (250)	Perform a break-in oil change at one month
▶	General lubrication	50 H	3 M	310 (500)	Lubricate all fittings, pivots, cables, etc.
	Shift Linkage	50 H	6 M	310 (500)	Inspect, lubricate, adjust
■	Steering	50 H	6 M	310 (500)	Lubricate
▶	Front suspension	50 H	6 M	310 (500)	Lubricate
▶	Rear suspension	50 H	6 M	310 (500)	Lubricate
	Carburetor float bowl	50 H	6 M	310 (500)	Drain bowl periodically and prior to storage
■ E	Throttle Cable/ ETC Switch	50 H	6 M	310 (500)	Inspect; adjust; lubricate; replace if necessary
■ E	Choke cable	50 H	6 M	310 (500)	Inspect; adjust; lubricate; replace if necessary
E	Carburetor air intake ducts/ flange	50 H	6 M	310 (500)	Inspect ducts for proper sealing/air leaks
▶	Front hub bear-ings (if equipped)	50 H	6 M	310 (500)	Inspect; clean; replace as needed
	Drive belt	50 H	6 M	310 (500)	Inspect; adjust; replace as needed
	Cooling system (if applicable)	50 H	6 M	310 (500)	Inspect coolant strength seasonally; pressure test system yearly
▶ E	Engine oil change	100 H	6 M	620 (1000)	Perform a break-in oil change at 25 hours/one month
▶ E	Oil filter change	100 H	6 M	620 (1000)	Replace with oil change
▶ E	Oil tank vent hose	100 H	12 M	620 (1000)	Inspect routing, condition
■ E	Valve clearance	100 H	12 M	620 (1000)	Inspect; adjust

▶ Perform these procedures more often for vehicles subjected to severe use.
E Emission Control System Service (California)
■ Have an authorized Polaris dealer perform these services.

Periodic Maintenance Chart

	Item	Maintenance Interval (whichever comes first)			Remarks
		Hours	Calendar	Miles (Km)	
■ E	Fuel system	100 H	12 M	620 (1000)	Check for leaks at tank cap, lines, fuel valve, filter, pump, carburetor; replace lines every two years
■ E	Fuel filter	100 H	12 M	620 (1000)	Replace yearly
▶	Radiator (if applicable)	100 H	12 M	620 (1000)	Inspect; clean external surfaces
▶	Cooling hoses (if applicable)	100 H	12 M	620 (1000)	Inspect for leaks
▶	Engine mounts	100 H	12 M	620 (1000)	Inspect
	Exhaust muffler/ pipe	100 H	12 M	620 (1000)	Inspect
■ E	Spark plug	100 H	12 M	620 (1000)	Inspect; replace as needed
■ E	Ignition Timing	100 H	12 M	620 (1000)	Inspect
▶	Wiring	100 H	12 M	620 (1000)	Inspect for wear, routing, security; apply dielectric grease to connectors subjected to water, mud, etc.
■	Clutches (drive and driven)	100 H	12 M	620 (1000)	Inspect; clean; replace worn parts
■	Shift selector lubricant	200 H	24 M	1240 (2000)	Change lubricant every two years
■	Brake fluid	200 H	24 M	1240 (2000)	Change every two years
	Spark arrestor	300 H	36 M	1860 (3000)	Clean out
E	Idle speed	-			Adjust as needed
■	Toe adjustment	-			Inspect periodically; adjust when parts are replaced
▶ ■	Auxiliary brake	-			Inspect daily; adjust as needed
	Headlight aim	-			Adjust as needed

▶ Perform these procedures more often for vehicles subjected to severe use.
E Emission Control System Service (California)
■ Have an authorized Polaris dealer perform these services.

MAINTENANCE AND LUBRICATION

Lubrication Recommendations

Lubricate all components at the intervals outlined in the Periodic Maintenance Chart beginning on page 70. Items not listed in the chart should be lubricated at the General Lubrication interval.

Maintenance Chart Key

▶ More often under severe use, such as wet or dusty conditions

★ Use Polaris Premium All Season Grease or grease conforming to NLGI No. 2

● Use Polaris Premium U-Joint Lube every 500 miles, before long periods of storage, or after pressure washing or submerging.

Item	Lube Rec.	Method
Brake Fluid	DOT 3 only	See page 37.
Drive Chains	O-Ring chain lube or SAE 80/90	Lubricate as often as required (before each ride in wet conditions).
Gear Selector Oil	Premium 4 Synthetic 0W-40	Maintain oil level at the center of the shift rail. Do not overfill.
Transmission Oil	Polaris Premium Synthetic Gearcase Lube	See page 76.
Front Prop Shaft Yoke (Loc. 1)	●Grease	Locate fittings and grease
AWD Hubs (Loc. 2)	Premium Demand Drive Hub Fluid	Remove set screw in hubs. Rotate wheels to 4:00 position (A). If lubricant is not visible add more. Reinstall set screw.
Ball Joint (Loc. 3)	★Grease	Locate zerk on back side of struts and grease with grease gun.
Rear Axle Bearing (Loc. 4)	★Grease	Locate fitting on eccentric and grease with grease gun.
Swing Arm Bushings (Loc. 5)	★Grease	Locate fitting on swing arm and grease with grease gun.
Middle Axle Bearings (Loc. 6)	▶Grease	Locate fitting on eccentric and grease with grease gun.
Center Swing Arm Housing (Loc. 7)	▶Grease	Locate fitting on swing arm housing and grease with grease gun.
Rear Strut (Loc. 8)	▶Grease	Locate fitting on rear strut and grease with grease gun.
Tie Rod Ends (Loc. 9)	▶Grease	Grease with grease gun.

Lubrication Recommendations

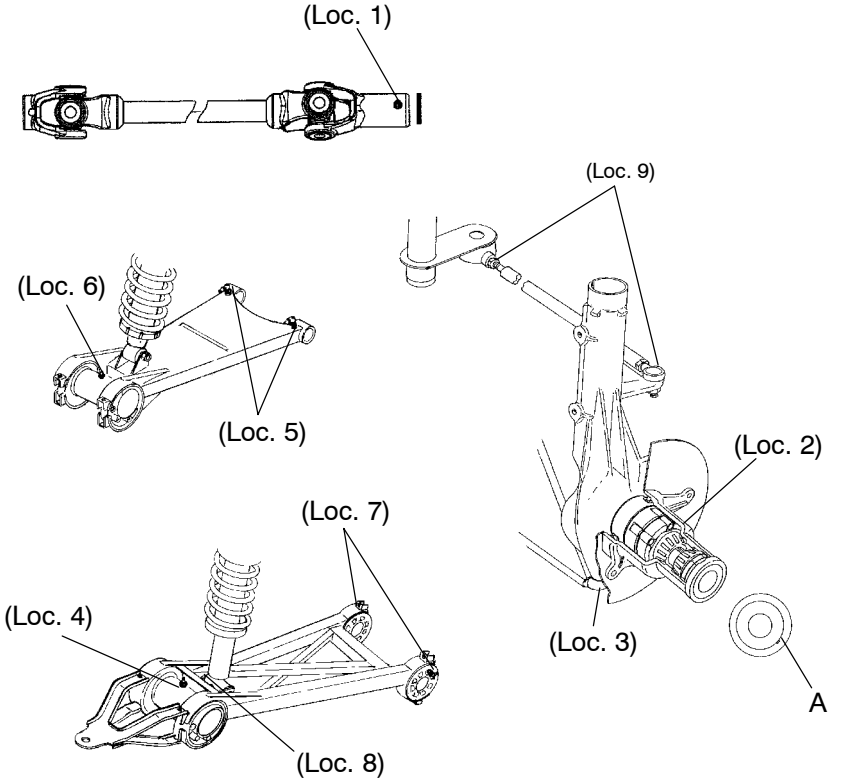

MAINTENANCE AND LUBRICATION

Lubrication Recommendations

Transmission Lubrication

Always check and change the transmission lubricant at the intervals outlined in the Periodic Maintenance Chart beginning on page 70. Maintain the oil level at the bottom of the fill hole threads. Polaris recommends the use of Premium AGL Synthetic Gearcase Lubricant. See page 113 for the part numbers of Polaris products.

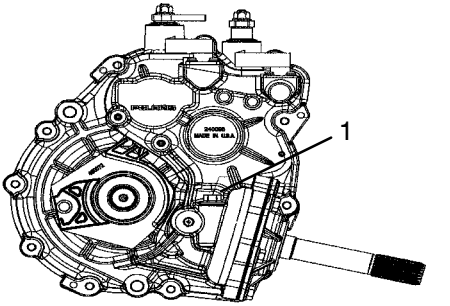

Oil Check

1. Position the ATV on a level surface and remove the propshaft shield from the right side of the vehicle.
2. Remove the fill plug (1) and add the recommended lubricant as needed to maintain the oil level at the proper level.

NOTE: Do not fill to the bottom of the fill hole threads.

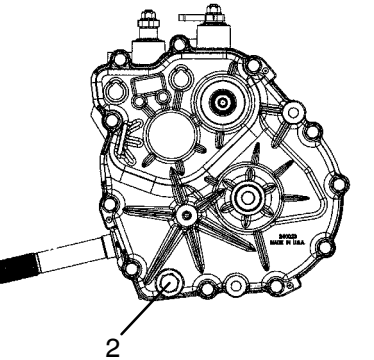

3. Reinstall the fill plug and propshaft shield.

Oil Change

1. Position the ATV on a level surface and remove the propshaft shield from the right side of the vehicle.
2. Remove the transmission drain plug (2) located on the bottom left-hand side and drain the oil into an appropriate container. Discard used oil properly.
3. Clean and reinstall the drain plug with a new sealing washer. Torque to 14 ft. lbs. (19 Nm).
4. Remove the fill plug and add the recommended lubricant. Refer to the specifications section beginning on page 114 for capacities.
5. Reinstall the fill plug and check for leaks.
6. Reinstall the propshaft shield.

Lubrication Recommendations

Front Gearcase Lubrication

Always check and change the front gearcase oil at the intervals outlined in the Periodic Maintenance Chart beginning on page 70. Maintain the oil level at the bottom of the fill plug threads. Polaris recommends the use of Premium ATV Angle Drive Fluid. See page 113 for the part numbers of Polaris products.

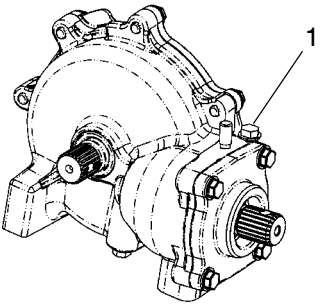

Oil Check

1. Position the vehicle on a level surface and remove the fill plug (1).
2. View the oil level and add the recommended oil as needed.
3. Reinstall the fill plug. Torque to 14 ft. lbs. (19 Nm).

Oil Change

1. Remove the fill plug.
2. Remove gearcase drain plug located on the bottom right-hand side and drain the oil.
3. Clean and reinstall the drain plug. Torque to 14 ft. lbs. (19 Nm).
4. Add the recommended fluid to the bottom of the fill plug threads.
5. Reinstall the fill plug. Torque to 14 ft. lbs. (19 Nm).
6. Check for leaks.

MAINTENANCE AND LUBRICATION

Lubrication Recommendations

Premium 4 Synthetic Lubricant

Polaris Premium 4 All Season Synthetic engine oil has been specially formulated for use in Polaris 4 cycle engines. It's a fully synthetic, high performance, multi-viscosity oil designed to provide the ultimate in lubrication performance and protection. See page 113 for the part numbers of Polaris products.

Premium 4 possesses unsurpassed film strength over the widest possible temperature range. It resists viscosity and frictional breakdown in ambient temperatures from -40° F. to 120° F. Its exceptional frictional properties result in more efficient operation, more power output and lower fuel consumption.

Although Polaris Premium 4 is the only oil recommended for use in this engine, use of any API certified SH oil is allowable as long as it's 0-40W. Oil may need to be changed more frequently if Polaris Premium 4 is not used. Follow the manufacturer's recommendations for ambient temperature operation.

CAUTION

Mixing brands or using a non-recommended oil may cause serious engine damage. We recommend the use of Polaris Premium 4 All Season synthetic oil or API certified SH oil, 0-40W. Never mix brands.

Lubrication Recommendations

Oil Level

The oil tank is located on the left side of the vehicle. To check the oil:

1. Position the vehicle on a level surface.
2. Start the engine and let it idle for 20-30 seconds.
3. Stop the engine. Remove the dipstick and wipe it dry with a clean cloth.
4. Screw the dipstick completely in, then remove it and check to see if the oil level is between the full and add marks.

NOTE: The dipstick must be screwed all the way in to keep the angle and depth consistent.

5. Add oil as needed to bring the level to the normal range (1). Do not overfill.

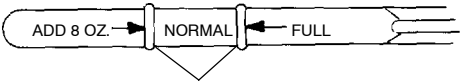

1

NOTE: If oil level rises above the full mark, water and/or fuel may be collecting in the tank and the oil should be changed.

MAINTENANCE AND LUBRICATION

Lubrication Recommendations

Oil and Filter Change

⚠ CAUTION

Hot oil can cause serious burns to skin. Do not allow hot oil to come into contact with skin.

If the ATV is left without oil in the system for extended periods, the oil pump may lose its prime, which could result in engine damage. Always replace the oil and filter within a few hours of draining the oil. Do not allow the vehicle to be without oil overnight.

Always change the oil and filter at the intervals outlined in the Periodic Maintenance Chart beginning on page 70. Always change the oil filter whenever changing oil.

1. Position the vehicle on a level surface. Clean the area around the drain plug at the bottom of the oil tank and the bottom of the engine.
2. Run the engine for two to three minutes, then turn it off.
3. Place a drain pan beneath the oil tank and remove the drain plug (1). Allow the oil to drain completely.
4. Install a new sealing washer (2) on the oil drain plug.

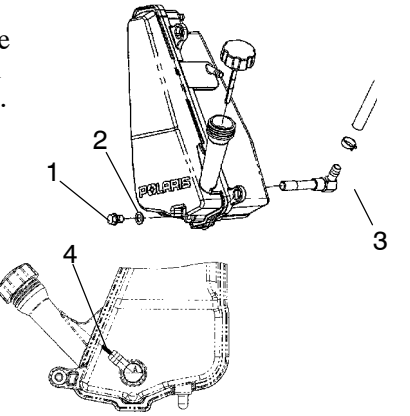

NOTE: The sealing surfaces on the drain plug and the oil tank should be clean and free of burrs, nicks or scratches.

5. Reinstall the drain plug and torque to 14-17 ft. lbs. (19-23 Nm).
6. Disconnect the lower oil delivery hose and remove the screen fitting (3) from the oil tank. Clean and reinstall the fitting, torquing to 25 ft. lbs. (34 Nm). Reattach the oil line.

NOTE: The fitting threads must be sealed with Loctite™ PST 505 or PTFE seal tape. The fitting must also line up with the mark (4) on the rear side of the oil tank.

Lubrication Recommendations

Oil and Filter Change

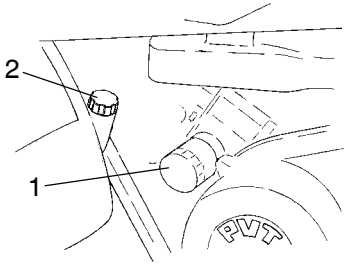

7. Place shop towels beneath the oil filter. Using an oil filter wrench, turn the filter (1) counterclockwise and remove.
8. Lubricate the gasket on the new filter with a film of new engine oil. Check to make sure the gasket is in good condition. Also make sure the gasket from the old filter is not still on the engine.
9. Install the new filter and tighten by hand 1/2 to 3/4 turn after gasket contacts the engine.
10. Approximately one cup of engine oil will remain in the crankcase. To drain, remove the drain plug on the lower right side of the crankcase.

NOTE: The sealing surfaces on the drain plug and crankcase should be clean and free of burrs, nicks or scratches.

11. After draining, reinstall the drain plug.

CAUTION

Mixing brands or using a non-recommended oil may cause serious engine damage. We recommend the use of Polaris Premium 4 All Season synthetic oil or API certified SH oil, 0-40W. Never substitute or mix oil brands.

12. Remove the dipstick (2) and add two quarts (1.9 l) of the recommended oil. Reinstall the dipstick.

NOTE: If the sump is not drained, add about 1 3/4 quarts initially.

13. Place the gear selector in neutral and set the parking brake.
14. **Prime the oil pump using the procedure on page 92**, then stop the engine and inspect for leaks.
15. Recheck the oil level on the dipstick and add oil as necessary to bring the level to the upper (full) mark on the dipstick.
16. Dispose of the used filter and oil properly.

MAINTENANCE AND LUBRICATION

Engine Cooling System

Coolant

To ensure that the coolant maintains its ability to protect the engine, we recommend that the system be completely drained every two years and a fresh mixture of antifreeze and water added. Polaris recommends the use of Polaris Premium 60/40 anti-freeze/coolant or a 50/50 mixture of high quality aluminum compatible anti-freeze/coolant and distilled water. Polaris Premium 60/40 is already premixed and ready to use. Do not dilute with water. See page 113 for the part numbers of Polaris products.

NOTE: Always follow the manufacturer's mixing recommendations for the freeze protection required in your area.

Any time the cooling system has been drained for maintenance or repair, replace the coolant. If the recovery bottle has run dry, the level in the radiator should be inspected. Add coolant as needed.

Radiator Coolant Level

⚠ WARNING

Escaping steam can cause severe burns. Never remove the pressure cap while the engine is warm or hot. Always allow the engine to cool before removing the pressure cap.

1. Access the radiator pressure cap by removing the four screws securing front rack (1). Remove the front cover (2) by placing your fingers under the front of the cover and pulling upward.
2. Remove the pressure cap.
3. Using a funnel, slowly add coolant as necessary through the radiator filler neck.
4. Replace the pressure cap and secure the front cover and rack.

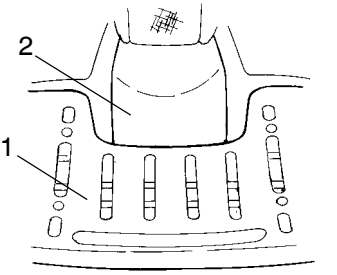

NOTE: Use of a non-standard pressure cap will not allow the recovery system to function properly. Contact your dealer for the correct replacement part.

Engine Cooling System

Recovery Bottle Coolant Level

The recovery bottle (1) is located on the left side of the vehicle. To access the recovery bottle, remove the left side panel as outlined on page 93.

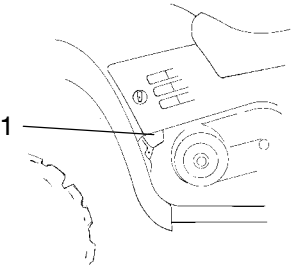

Maintain the coolant level between the minimum and maximum marks on the recovery bottle. Add coolant as needed.

Cooling System Operation

The engine coolant level is controlled, or maintained, by the recovery system. The recovery system components are the recovery bottle, the radiator filler neck, the radiator pressure cap and the connecting hose.

As coolant operating temperature increases, the expanding (heated) excess coolant is forced out of the engine, past the pressure cap, and into the recovery bottle. As engine coolant temperature decreases the contracting (cooled) coolant is drawn back up from the bottle, past the pressure cap, and into the radiator.

NOTE: Some coolant level drop on new vehicles is normal as the system is purging itself of trapped air. Observe coolant levels and maintain as recommended by adding coolant to the recovery bottle.

MAINTENANCE AND LUBRICATION

Filter Systems

Air Filter Service

Always inspect and replace the air filter at the intervals outlined in the Periodic Maintenance Chart beginning on page 70.

1. Remove the seat.
2. Remove the spring clamps securing the air box lid and remove the lid.
3. Loosen the clamp and remove the filter.
4. Remove the fabric type pre-filter (1) from the main filter (2). Wash the pre-filter in soapy water, rinse and allow to dry thoroughly.
5. Reinstall the pre-filter over the main filter. (Replace the main filter if necessary.)
6. Reinstall the filter into the air box and tighten the clamp. Do not over-tighten the clamp or filter damage may occur.

CAUTION

Operating the vehicle without a pre-filter can cause engine damage. Always reinstall the pre-filter before operating.

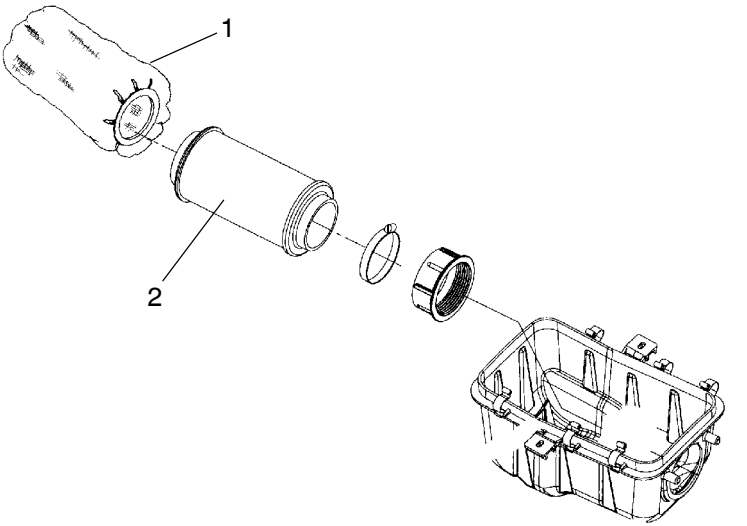

Filter Systems

Air Box Drain

Periodically check the air box drain tube located on the bottom rear of the air box. Empty the drain tube if necessary.

Breather Filter

Always inspect and replace the breather filter at the intervals outlined in the Periodic Maintenance Chart beginning on page 70.

1. Remove the clamps and pull the breather filter (1) out of the hoses.

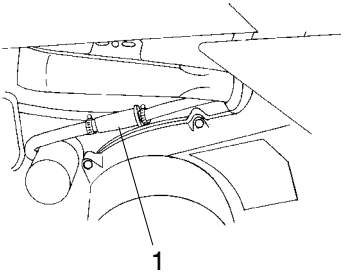

NOTE: It's not necessary to remove the lower hose from the engine.

2. Inspect the filter for debris. Blow gently through the filter in the direction of the arrow to check for clogging. Replace as needed.
3. Check the hoses for cracks, deterioration, abrasion, or leaks. Replace as needed.
4. Reinstall the filter and clamps with the arrow pointing toward the air box.

NOTE: The breather filter is intended to be used with the air box pre-filter in place. Without the pre-filter, the breather filter can clog quickly.

CAUTION

Operating the vehicle without both the pre-filter and breather filter can cause engine damage. Always reinstall both filters when they've been removed for service.

Adjustments

⚠ WARNING

Severe injury or death can result from improper toe alignment and adjustment. Do not attempt to adjust tie rod alignment. All tie rod adjustments should be performed by an authorized Polaris dealer.

Toe Alignment

Use the following procedure to check the toe alignment of the vehicle. The recommended toe alignment is 1/8″ to 1/4″ toe out.

1. Set the handlebars in a straight-ahead position and hold them in this position.

NOTE: The steering frog can be used as an indicator of whether the handlebars are straight. The frog should always point straight back from the steering post.

2. Place stands (1) in front of the vehicle, perpendicular to the rear tires. See illustration.
3. Tie an elastic string around the stands, making sure the string just touches the side surface of the rear tires on each side of the vehicle and goes around the stands in front of the vehicle (2).
4. Measure the distance from the string to the rim at the front and rear of the front rim (3). The rear measurement should be 1/16″ - 1/8″ (.2 to .3 cm) more than the front measurement.

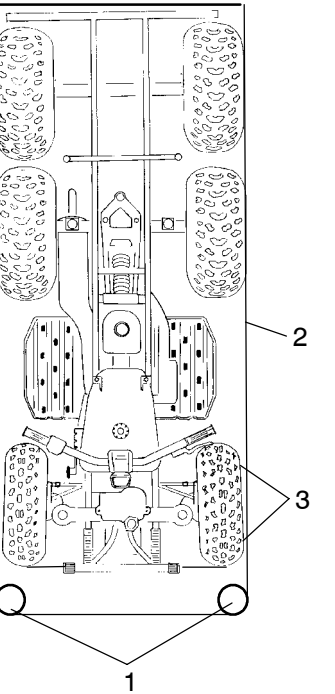

NOTE: If you discover improper alignment, see your Polaris dealer for service.

Adjustments

Steering Inspection

The steering assembly of the vehicle should be checked periodically for loose nuts and bolts. Have your dealer tighten any loose nuts and bolts before operating the vehicle.

Camber and Caster

The camber and caster are non-adjustable.

Handlebar Adjustment

The handlebars can be adjusted for rider preference.

⚠ WARNING

Improper adjustment of the handlebars or incorrect torquing of the adjuster block tightening bolts can cause limited steering or loosening of the handlebars, resulting in loss of control and possible serious personal injury or death. Follow the adjustment procedures exactly, or see your Polaris dealer for service.

1. Locate handlebar bolts (1) by removing the upper headlight pod.
2. Loosen the four bolts.
3. Adjust the handlebar to the desired height. Be sure the handlebars do not contact the gas tank or any other part of the machine when turned fully to the left or right.

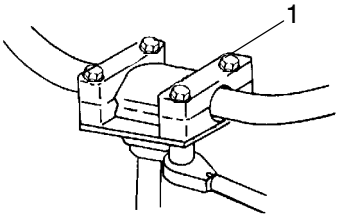

4. Torque the front two bolts to 10-12 ft. lbs. (14-17 Nm), then torque the rear two bolts. A gap of up to 1/8” will remain at the rear bolts.

Optional Suspension Springs

Although the Polaris Sportsman 6x6 suspension has the capability of providing the best ride possible, the following accessory springs are available to better suit individual riding preferences.

NOTE: Optional springs may be a different color than standard springs. Springs may be painted to a desired color using Polaris touch up paint, available through Polaris dealers.

SOFT ← → **FIRM**

Front Strut Spring	**7041375-067** OPTION 64/113 lb/in	**7041450-067** STANDARD 101 lb/in	N/A

Adjustments

Front Brake

Front Wheel and Middle Axle Brake

The front and middle axle brakes are hydraulic disc brakes and are activated by moving the brake lever toward the handlebar. These brakes are self-adjusting and require no adjustment.

The following checks are recommended to keep the brake system in good operating condition. Check more often if brakes are used heavily under normal operation.

1. Always keep brake fluid at an adequate level (see page 37).

NOTE: Under normal functioning the diaphragm extends into the reservoir as fluid level drops. If the fluid level is low and the diaphragm is not extended, a leak is likely and the diaphragm should be replaced. Always fill the reservoir as needed whenever the cover is loosened or removed to ensure proper diaphragm operation.

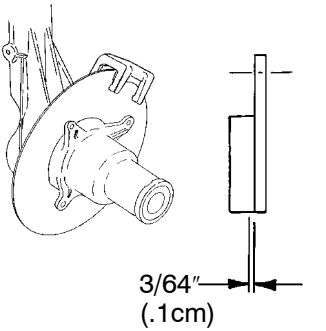

2. Check the brake system for fluid leaks.
3. Check the brakes for excessive travel or spongy feel.
4. Check the friction pads for wear, damage and looseness.
5. Check the security and surface condition of the disc.

NOTE: Replace brake pads when they are worn to 3/64″ (.1 cm).

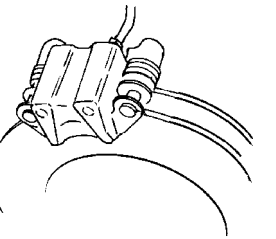

Middle Axle Brake

Adjustments

Rear Brake

The transmission brake is a hydraulic disc brake and is activated by the same lever that activates the front brake system. The transmission brake system is self-adjusting and requires no maintenance other than periodic checks of the pads for wear.

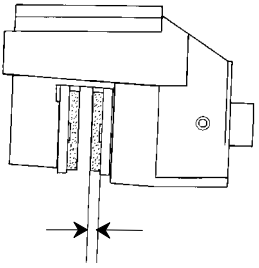

Change the brake pads when they're worn to 3/64″ (.1 cm).

Inspect the brake disc spline and pad wear surface for excessive wear.

Throttle Cable Free Play Adjustment

Throttle cable free play is adjusted at the handlebar.

1. Slide the boots (1) off the inline cable adjuster sleeve (2). Loosen the adjuster locknut (3).
2. Turn the adjuster until 1/16″ to 1/8″ freeplay is achieved at the thumb lever. Flip the throttle lever several times to confirm adjustment.
3. Tighten the locknut and slide the boots over the cable adjuster until they touch at the middle point of the adjuster.

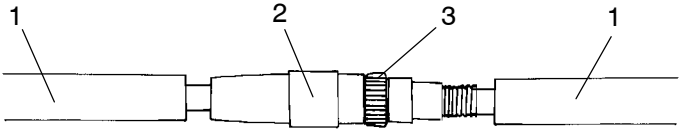

Front Wheel Hub Tightening

Front wheel bearing tightness and spindle nut retention are critical component operations. Service must be performed by your authorized Polaris dealer.

Front Drive Chain Adjustment

CAUTION

Operating the vehicle with the drive chain slack out of specification could cause serious damage to the transmission and drive components. Never operate the vehicle with the drive chain slack out of specification.

Check the amount of chain slack by moving the vehicle slightly forward to gain slack at the top side of the front chain. Then pull up and down on the chain. At this point the chain should have 3/8″-1/2″ (.95-.1.3 cm) deflection. If the chain needs adjustment, use the following procedure.

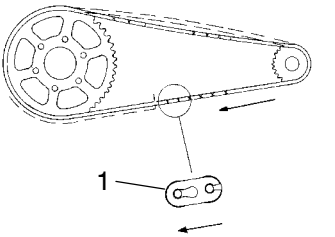

NOTE: See the proper splicelink clip opening position (1).

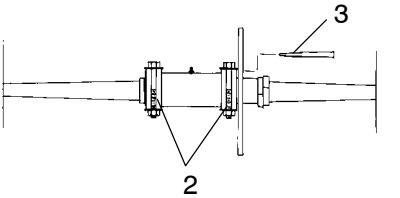

1. Remove the chain guard and loosen the chain guide.
2. Loosen the two eccentric locking bolts (2).
3. Loosen the caliper mount bolts.
4. Insert a pin punch (3) through the sprocket hub and into the eccentric axle housing.
5. Roll the vehicle ahead or back to adjust chain slack to the proper dimension.
6. Tighten the caliper mount bolts to 10-12 ft. lbs. (13.5-16.3 Nm).
7. Tighten the eccentric locking bolts to 60 ft. lbs. (80 Nm).
8. Confirm correct tension by rolling the vehicle forward, checking chain tension in several places around the chain.
9. Reinstall the chain guard.

NOTE: Reposition the chain guide to allow 1/8″ (.3 cm) clearance between the sprocket and guide.

Adjustments

Rear Axle Drive Chain Adjustment

To adjust the rear axle drive chain, loosen the rearmost eccentric locking bolts and rotate using the same method as outlined for the front chain adjustment. Total slack for the rear chain should be adjusted to 3/8″-1/2″ (.95-.1.3 cm) at the tightest point in the chain.

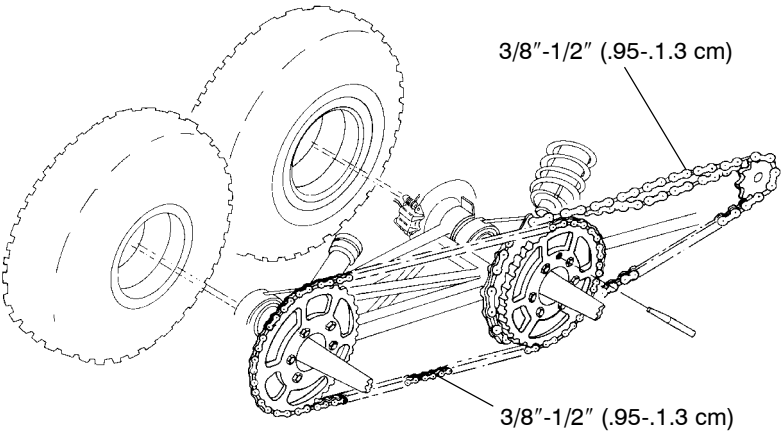

Carburetor/Engine Idle RPM Adjustment

Recommended engine idle RPM is 1200 +/- 200. If the engine idle speed is unsatisfactory and all other conditions are favorable, the carburetor can be adjusted as follows:

1. Start the engine and allow it to warm up for approximately five minutes.
2. Place the transmission in gear with the parking brake applied.
3. Adjust the carburetor idle screw (1) in or out until the desired idle RPM is reached. Turning the screw in (clockwise) will raise RPM. Turning the screw out (counterclockwise) will lower RPM.

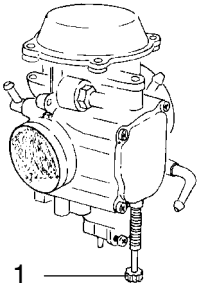

Adjustments

Carburetor

IMPORTANT: Your Polaris ATV is calibrated at the factory for optimal performance at altitudes ranging from zero to 6,000 feet (1800 m) and temperatures of +40 degrees F. (4 degrees C.) or higher. Above 6000 feet (1800 m) the engine air/fuel mixture becomes overly rich and the engine loses approximately 3% of its power for each 1000-foot (304.8 m) increase in elevation. Although this power cannot be regained, adjustments to the carburetor and drive system can be made to allow more efficient operation. Optional jets, available from your Polaris dealer, are required for operation above 6,000 feet and temperatures below +40 degrees F. (4 degrees C.)

NOTE: Continuous operation of the engine without proper jetting when required can cause poor performance, overheating or PVT or engine damage. See your Polaris dealer for more information about jetting the ATV for conditions in your area.

NOTE: Pilot screws are sealed with metal plugs and are serviceable only by Polaris dealers.

Oil Pump Priming

This priming procedure must be performed whenever the oil hose connection between the oil tank and pump inlet has been disconnected.

1. Clamp or pinch off the vent line (1) approximately 2″ from the oil tank (2), between the end of the oil tank vent fitting and the vent line's pressure relief slit (3).
2. Run the engine for 45-60 seconds.
3. Remove the vent line clamp. The oil pump will now be properly primed and ready for operation.

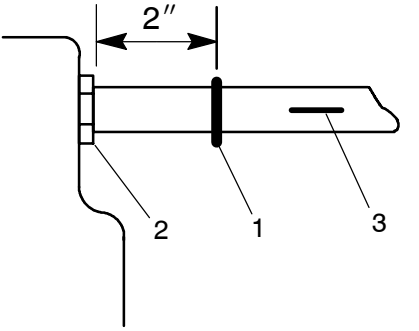

Adjustments

Side Panel Removal

1. Remove the seat.
2. Grasp the rear of the side panel near the rear cab. With a quick and firm motion, pull the panel forward and outward to disengage the two rear tabs.
3. Place your hand on top of the side panel behind the fuel tank. With a quick and firm motion, push down on the side panel to disengage the top rear two tabs. Then pull up on side panel to disengage front upper and lower tabs.
4. To reinstall the side panel, align the panel tabs with the slots on the front cab. Push the panel upward and forward until the tabs lock. Bend the rear of the side panel and insert the two tabs into the rear cab.

Step 2

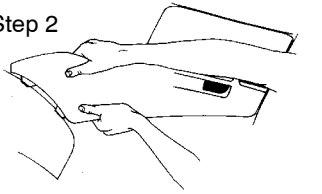

Step 3

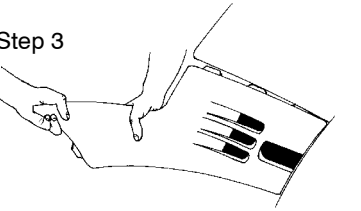

Step 4

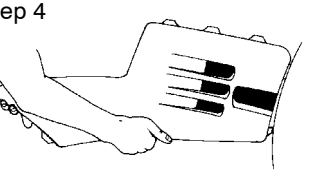

Adjustments

Wheel Removal

1. Stop the engine, place the transmission in gear and lock the parking brake.
2. Loosen the wheel nuts slightly.
3. Elevate the side of the vehicle by placing a suitable stand under the footrest frame.
4. Remove the wheel nuts and remove the wheel.

⚠ WARNING

Improperly installed wheels can adversely affect tire wear and vehicle handling, which can result in serious injury or death. Always ensure that all nuts are torqued to specification. Do not service axle nuts that have a cotter pin installed. See your Polaris dealer.

Wheel Installation

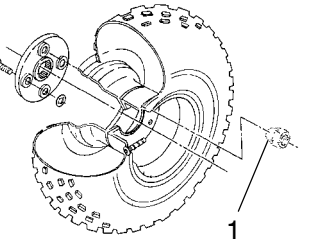

1. Place the transmission in gear and lock the parking brake.
2. Place the wheel in the correct position on the wheel hub. Be sure the valve stem is toward the outside and the rotation arrows on the tire point toward forward rotation.
3. Attach the wheel nuts and finger tighten them. Make sure the tapered side of the rear wheel nut fits into the taper on the wheel (1).
4. Lower the vehicle to the ground.
5. Torque all wheel nuts to specification. See page 96.

Tire Tread Depth

Always replace tires when tread depth is worn to 1/8″ (.3 cm) or less.

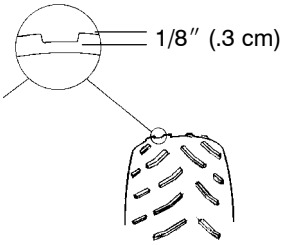

⚠ WARNING

Operating the vehicle with worn tires will increase the possibility of skidding, which could lead to loss of control and serious injury or death. Always replace tires when the tread depth measures 1/8″ (.3 cm) or less.

⚠ WARNING

Use of non-standard size or type of tires or improper tire inflation may adversely affect vehicle maneuverability and cause loss of control resulting in serious injury or death. Maintain proper tire pressure as outlined in this owner's manual. When replacing a tire always use original equipment size and type.

Tire Specifications

Tire Specifications Polaris Sportsman 6x6
Front - 25 x 8 - 12 Inflation Pressure - 5 PSI
Center - 25 x 11 - 12 Inflation Pressure - 5 PSI
Rear - 25 x 11 - 12 Inflation Pressure - 5 PSI
Cargo Box Load Capacity 800 lbs. (363 kg)
Front Rack Load Capacity 75 lbs. (34 kg)
Gross Vehicle Weight 1970 lbs. (894 kg) including vehicle, driver and cargo. Vehicle weighs 895 lbs. (406 kg).

Axle and Wheel Nut Torque Specifications

Check the following nuts for tightness occasionally or if they've been loosened for service.

Item	Specification
Front Spindle Nut(s)	100 in. lbs. (11 Nm)
Front Wheel Nuts	27 ft. lbs. (37 Nm)
Center and Rear Axle Nut(s)	80 ft. lbs. (108 Nm)
Center and Rear Wheel Nuts	50 ft. lbs. (68 Nm)

Spark Plugs

- Use NGK BKR5E spark plugs.
- Proper electrode gap is .036″ (.9 mm)
- Spark plug torque is 14 ft. lbs. (1.9 kg/m)

CAUTION

Using non-recommended spark plugs can result in serious engine damage. Always use Polaris-recommended spark plugs.

Spark plug condition is indicative of engine operation. The spark plug firing end condition should be read after the engine has been warmed up and the vehicle has been driven at higher speeds. Immediately check the spark plug for correct color.

⚠ WARNING

A hot exhaust system and engine can cause serious burns. Wear protective gloves when removing a spark plug for inspection.

1. Normal

The normal insulator tip is gray, tan or light brown. There will be few combustion deposits. The electrodes are not burned or eroded. This indicates the proper type and heat range for the engine and the service.

NOTE: The tip should not be white. A white insulator tip indicates overheating, caused by use of an improper spark plug or incorrect carburetion adjustments.

2. Wet Fouled

The wet fouled insulator tip is black. A damp oil film covers the firing end. There may be a carbon layer over the entire nose. Generally, the electrodes are not worn. General causes of fouling are excessive oil, use of non-recommended oil, improper use of the choke, or incorrect carburetion adjustments.

Spark Plug Removal and Replacement

1. Remove the spark plug cap.
2. Using the special wrench provided in the tool pouch, rotate the spark plug counterclockwise to remove.
3. Reverse the procedure for spark plug installation. Torque to 14 ft. lbs. (1.9 kg/m).

PVT System

The basic operation of the Polaris PVT system is dependent on engine speed and vehicle torque requirements. As engine speed increases, the force exerted on the movable drive sheave by the flyweights also increases. This, in turn, increases the amount of *pinch* applied to the drive belt. Similarly, if the engine speed decreases, the amount of centrifugal force decreases, reducing the amount of belt pinch.

On Polaris ATVs, the approximate gear ratio difference between high and low range is 1:2.25. This difference in gearing affects the operation of the PVT, especially at speeds less than 7 MPH (11 KPH), due to the system's dependence on engine speed.

For example, when operating at a ground speed of 3 MPH (5 KPH) in low range, the engine speed would be around 3000 RPM. This is well above the engagement speed of 1200 - 1400 RPM. However, in high range at 3 MPH (5 KPH), the engine would be running at only 1500 RPM. Whenever operating this close to the engagement speed, the engine may be running at a speed too low to provide the pinch needed to prevent belt slip. Belt slip is responsible for creating the excessive heat that destroys belts and causes outer clutch covers to fail.

By switching to low range while operating at low ground speeds, the air temperature in the clutch cover is reduced by almost 160 degrees. Reducing the temperature inside the clutch cover extends the life of the PVT components (belt, cover, etc.).

When To Use Low Range vs. High Range

Following is a guideline for when to use low range and high range.

Low Range

- When basic operation is at speeds less than 7 MPH (11 KPH)
- For heavy pulling
- When operating in rough terrain (swamps, mountains, etc.) at low ground speeds

High Range

- When basic operation is at speeds greater than 7 MPH (11 KPH)
- When operating at high ground speeds

PVT System

⚠ WARNING

Failure to comply with the instructions in this warning can result in severe injury or death.

Do not modify any component of the PVT system. Doing so may reduce its strength so that a failure may occur at a high speed. The PVT system has been precision balanced. Any modification will cause the system to be out of balance, creating vibration and additional loads on components.

The PVT system rotates at high speeds, creating large amounts of force on clutch components. Extensive engineering and testing has been conducted to ensure the safety of this product. However, as the owner, you have the following responsibilities to make sure this system remains safe:

Always follow all recommended maintenance procedures. See your dealer as outlined in the owner's manual.

This PVT system is intended for use on Polaris products only. Do not install it in any other product.

Always make sure the PVT housing is securely in place during operation.

PVT Drying

There may be some instances when water is accidently ingested into the PVT system. Use the following instructions to dry it out before operating:

1. Remove the drain plug and allow the water to drain. Replace the drain plug.
2. Start the engine and shift the transmission into neutral. Apply varying throttle for 10-15 seconds to expel the moisture and air-dry the belt and clutches. Do not hold the throttle wide open for more than 10 seconds.
3. Allow the engine RPM to settle to idle speed and shift the transmission to the lowest available range.
4. Test for belt slippage. If the belt slips, repeat the process.
5. Take the vehicle to your dealer for service as soon as possible.

Spark Arrestor

⚠ WARNING

Failure to heed the following warnings while servicing the spark arrestor could result in serious injury or death.

Do not perform service on the spark arrestor while the system is hot. Exhaust system temperatures can reach 1000° F. Allow components to cool sufficiently before proceeding.

Remove any combustible materials from the area. Wear eye protection and leather work gloves. Do not stand behind or in front of the vehicle while purging. Never run the engine in an enclosed area. Exhaust contains poisonous carbon monoxide gas. Never go under the vehicle while it's inclined.

Use the following procedure to periodically purge accumulated carbon from the exhaust pipe/muffler.

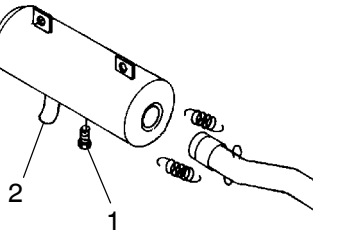

1. Remove the arrestor clean-out plug (1) from the bottom of the muffler.
2. Place the transmission in neutral and start the engine.
3. Purge carbon from the system by momentarily revving the engine several times.
4. If carbon is expelled, cover or plug the exhaust outlet (2) and rap on the pipe around the cleanout plug while revving the engine several more times.
5. If particles are still suspected to be in the muffler, elevate the rear of the vehicle one foot higher than the front. Set the parking brake and block the wheels. Make sure the vehicle is in neutral and repeat steps 3 and 4 until no more particles are expelled when the engine is revved.
6. Stop the engine and allow the arrestor to cool. Reinstall the arrestor plug and remove the outlet cover or plug.

Recoil Housing

Water will enter the recoil housing if the starter handle is disengaged from the rope or if the handle is not securely seated when under water.

Drain the recoil housing any time the vehicle has been operated in very wet conditions and also before storage.

The drain screw (1) is located at the bottom of the recoil housing, above the front propshaft. Remove the screw with a 10 mm wrench. Reinstall the screw after the housing has been drained.

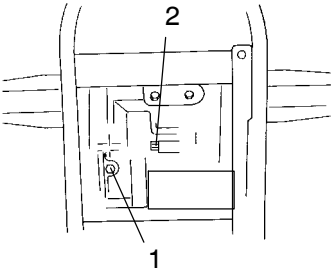

NOTE: Do not open the crankcase drain (2) unless the engine has ingested water. Some engine oil will be lost if crankcase drain is opened.

Battery

⚠ WARNING

Improperly connecting or disconnecting battery cables can result in an explosion and cause serious injury or death. When removing the battery, always disconnect the negative (black) cable first. When reinstalling the battery, always connect the negative (black) cable last.

Battery Removal

1. Disconnect the hold-down strap holding the battery in position, and remove battery cover.
2. Disconnect the black (negative) battery cable first.
3. Disconnect the red (positive) battery cable last.
4. Lift the battery out of the ATV.

Battery Installation

When installing a new battery, make sure it's fully charged prior to its initial use. Using a new battery that has not been fully charged can damage the battery and result in a shorter life. It can also hinder vehicle performance. Follow the battery charging instructions on page 103 before installing the battery.

1. Ensure that the battery is fully charged.
2. Set the battery in the battery holder.
3. Connect and tighten the red (positive) cable first.
4. Connect and tighten the black (negative) cable last.
5. Reinstall the battery cover and attach the hold-down strap.
6. Verify that cables are properly routed.

Battery

Battery Storage

When the vehicle is placed in storage for three months or more, the battery should be removed, stored out of the sun in a cool, dry place and tested monthly. Before reusing, take the battery to your dealer for testing and recharging.

Power plug leads may need to be bent down so that the battery cover can be installed.

Battery Charging

The following battery charging instructions apply only to the installation of a sealed battery. Read all instructions before proceeding with the installation of this battery.

The sealed battery is already filled with electrolyte and has been sealed and *fully charged* at the factory. *Do not ever* pry the sealing strip off or add any other fluid to this battery.

The single most important thing to maintaining a sealed battery is to keep it fully charged. Since the battery is sealed and the sealing strip cannot be removed, you must use a voltmeter or multimeter to measure DC voltage.

For a refresh charge, follow all instructions carefully.

1. Check the battery voltage with a voltmeter or multimeter. A fully charged battery will register 12.8 V or higher.
2. If the voltage is less than 12.8 volts, recharge the battery at 1.2 amps or less until the battery voltage is 12.8 V or greater.

NOTE: When using an automatic charger, refer to the charger manufacturer's instructions for recharging. When using a constant current charger, use the following guidelines for recharging.

⚠ WARNING

An overheated battery could explode, causing severe injury or death. Always watch charging times carefully. Stop charging if the battery becomes very warm to the touch. Allow it to cool before resuming charging.

MAINTENANCE AND LUBRICATION

Battery

Battery Charging

NOTE: Always verify battery condition before and 1-2 hours after the end of charging.

State of Charge	Voltage	Action	Charge Time* (Using constant current charger @ standard amps specified on top of battery)
100%	12.8-13.0 volts	None, check at 3 mos. from date of manufacture	None required
75%-100%	12.5-12.8 volts	May need slight charge, if no charge given, check in 3 months	3-6 hours
50%-75%	12.0-12.5 volts	Needs charge	5-11 hours
25%-50%	11.5-12.0 volts	Needs charge	At least 13 hours, verify state of charge
0%-25%	11.5 volts or less	Needs charge with desulfating charger	At least 20 hours

Lights

⚠ WARNING

Poor lighting while driving can result in severe injury or death. Headlight and taillight lenses become dirty during normal operation. Wash the headlights frequently to maintain lighting quality.

Hot components can cause serious burns to skin. Don't service the headlamps until they've cooled sufficiently.

Headlight Lamp Replacement

1. Using a small flat-blade screwdriver, push in on the lock tabs through the two small openings at the front of the headlight pod.
2. Lift the pod slightly while depressing the tabs.
3. Remove the three screws in the back of the headlight pod.
4. Lift the pod cover. Disconnect the speedometer harnesses from the speedometer. Unplug the indicator light harness and remove the pod cover.
5. Unplug the headlamp from the wiring harness.
6. Remove the boot and locking collar from the back of the lamp housing.
7. Grasp the base of the lamp and lift it out.
8. Reverse the previous steps to replace the lamp and reassemble the pod. Make sure the tab on the lamp locates properly in the housing.

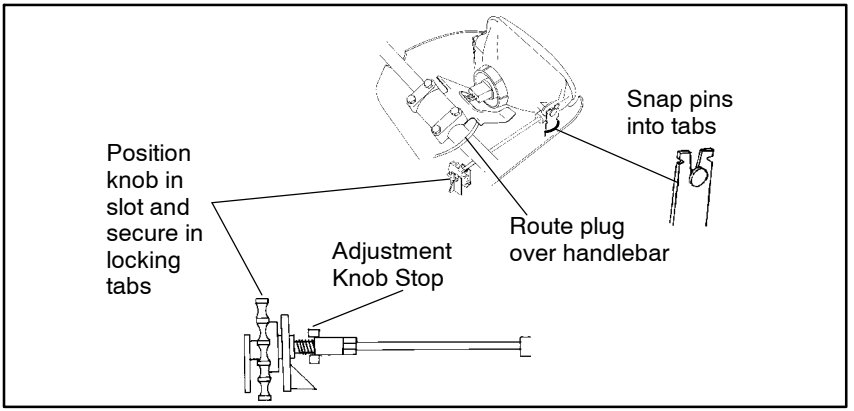

Lights

⚠ WARNING

Operating the vehicle on streets or roads, especially in darkness, could result in an accident and serious injury or death.

Your Sportsman 6x6 is not equipped with highway-approved lights. It's designed for and must be used for *off-road use only*. Use caution and drive at reduced speeds in conditions of reduced visibility such as fog, rain and darkness.

High Beam Headlight Adjustment

The headlight beam can be adjusted to any position desired by turning the adjusting knob located on the bottom right side of the headlight pod.

1. Place the vehicle on a level surface with the headlight approximately 25 ft. (7.6 m.) from a wall.
2. Measure the distance from the floor to the center of the headlight and make a mark on the wall at the same height.
3. Start the engine and turn the headlight switch to high beam.
4. Observe the headlight aim on the wall. The most intense part of the headlight beam should be aimed two inches (5.1 cm) below the mark placed on the wall.

NOTE: Include rider weight on the seat when measuring.

5. Adjust the beam to the desired position by turning the adjustment knob either clockwise or counterclockwise.

Lights

Headlight Housing Replacement

1. Remove the Phillips screws from the bottom of the headlight pod at each front corner.

NOTE: To aid in accessing these screws, it may be helpful to turn handlebars to the left or right and use a very short screwdriver. Removal of the front rack and cover may also allow easier access.

2. Remove the three screws in the back of the headlight pod.
3. Lift the pod cover. Disconnect the speedometer harnesses from the speedometer and remove the pod cover.
4. Unplug the headlamp from the wiring harness.
5. Pull the headlight housing up to release from the locking tabs.
6. Lift the adjusting knob up to remove from the locking tabs.

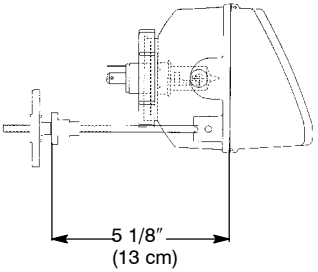

7. Carefully pull the assembly up and out of pod.
8. Reverse the steps to install the new housing and reassemble the pod.

NOTE: The distance from the headlamp parting line to the end of the adjustment knob stop is 5 1/8″ (13 cm). See illustration.

9. Adjust the headlight aim by turning the adjusting knob.

Lights

Taillight/Brakelight Lamp Replacement

If the taillight/brakelight does not work the lamp may need to be replaced.

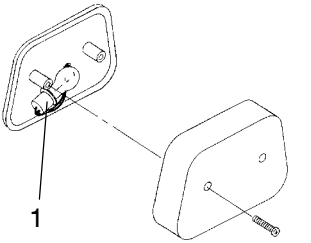

1. Remove the taillight lens cover mounting screws. Remove the lens cover and gasket and set aside for reassembly.
2. Remove the lamp (1). Apply dielectric grease to the socket and install the new lamp.
3. Test the taillight/brakelight for proper operation.
4. Reinstall the gasket and lens cover.

Cleaning and Storage

See page 113 for the part numbers of Polaris products.

Cleaning the ATV

Keeping your ATV clean will not only improve its appearance but it can also extend the life of various components. With a few precautions, your ATV can be cleaned much like an automobile.

Washing the ATV

The best and safest way to clean your ATV is with a garden hose and a pail of mild soap and water. Use a professional type washing mitten, cleaning the upper body first and the lower parts last. Rinse with water frequently and dry with a chamois to prevent water spots.

NOTE: If warning and safety labels are damaged, contact your a Polaris dealer for free replacement.

Polaris does not recommend the use of a high pressure type car wash system for washing the ATV. If a high pressure system is used, exercise extreme care to avoid water damage to the wheel bearings, transmission seals, body panels, brakes and warning labels.

NOTE: Grease all zerk fittings immediately after washing, and allow the vehicle to run for a while to evaporate any water that may have entered the engine or exhaust system.

Waxing the ATV

Your ATV can be waxed with any non-abrasive automotive paste wax. Avoid the use of harsh cleaners since they can scratch the body finish.

CAUTION

Certain products, including insect repellants and chemicals, will damage plastic surfaces. Use caution when using these products near plastic surfaces.

Cleaning and Storage

Storage Tips

If your vehicle will be placed in extended or off season storage, perform all necessary repairs and thoroughly clean the vehicle. Drain the recoil housing. Remove the battery and store it in a cool, dry place. See the battery section beginning on page 102.

Fluid Levels

Inspect the following fluid levels and change if necessary: front gearcase; transmission; front hubs; brake fluid (change every two years or as required if fluid looks dark or contaminated).

Engine

1. Support the front end of the machine so the engine is level or tilted slightly rearward.
2. Remove the spark plug, rotate the piston to BDC and pour approximately two ounces of Premium 4 Synthetic 4-cycle oil into the cylinder. Reinstall the spark plug.
3. Apply dielectric grease to the inside of the spark plug cap and install the cap onto the plug.
4. Turn the engine over several times, using the recoil starter, to ensure coverage of piston rings, cylinder walls and crankshaft bearings.
5. Treat the fuel system with Polaris Carbon Clean.
6. If Polaris fuel system additive is not used, the fuel tank, fuel lines, and carburetor should be completely drained of gasoline.

Engine Anti-Freeze

Test engine coolant strength and change if necessary. Replace coolant every two years.

Lubricate

Inspect all cables and lubricate with Polaris Cable Lubricant. Follow lubrication guidelines in the maintenance section of the service or owner's manual to completely grease and lubricate the entire vehicle with Polaris Premium All Season Grease. Apply Polaris O-Ring Chain Lube to the drive chain(s).

Storage Area/Covers

Set the tire pressure and safely support the ATV with the tires 1-2" off the ground. Be sure the storage area is well ventilated, and cover the machine with a genuine Polaris ATV cover.

NOTE: Do not use plastic or coated materials. They do not allow enough ventilation to prevent condensation, and may promote corrosion and oxidation.

Cleaning and Storage

Chrome Wheel Care (if equipped)

Proper maintenance will protect chrome wheels from corrosion, preserve wheel life and ensure a “like new” appearance for many years.

1. Wash chrome rims frequently. Use a mild detergent to remove any salt, dirt, mud or grime. Never use abrasive cleaners on plated or painted surfaces.
2. Polish the clean chrome wheels periodically. Use an automotive grade chrome polish.
3. Routinely and liberally apply a weather resistant wax to each polished chrome wheel. Choose a product suitable for chrome finishes. Read and follow the product labels and instructions.
4. Chrome wheels exposed to road salt (or salt in the air in coastal areas) are more susceptible to corrosion if not properly cleaned. Clean chrome wheels more often if they’re exposed to salt or other corrosive elements.

Removing Corrosion

If light rust is found on the chrome finish, use steel wool (#0000-OTT grade) to remove it. Gently rub the affected areas with the steel wool until the corrosion has been removed. Clean and polish the wheel as outlined above.

Transporting the Vehicle

Follow these procedures before transporting the vehicle with another unit.

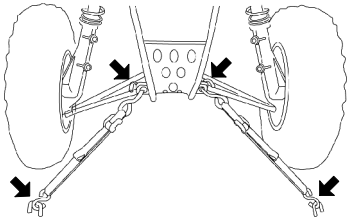

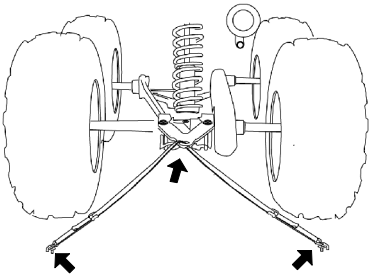

1. Turn off the engine and remove the key to avoid loss during transporting.
2. Turn the fuel valve off.
3. Be sure the fuel cap and oil cap are installed correctly.
4. Always tie the frame of the ATV to the transporting unit securely using suitable straps and/or rope.
5. Always place the transmission in gear and lock the parking brake.

MAINTENANCE AND LUBRICATION

Periodic Maintenance Record

Use the following chart to record periodic maintenance.

Maintenance Interval Performed	Servicing Date	Servicing Dealer or Person	Remarks

Part No.	Description
	Engine Lubricant
2871281	Premium 4 Synthetic 0W-40 (4-Cycle) Engine Oil (qt.)
2871844	Premium 4 Synthetic 0W-40 (4-Cycle) Engine Oil (gal.)
	Gearcase / Transmission Lubricants
2873602	Premium AGL Synthetic Gearcase Lube (qt.)
2873603	Premium AGL Synthetic Gearcase Lube (gal.)
2871653	Premium ATV Angle Drive Fluid (8 oz.)
2872276	Premium ATV Angle Drive Fluid (2.5 gal.)
2870465	Pump for Gallon Jug
2871654	Premium Demand Drive Hub Fluid (8 oz.)
2872277	Premium Demand Drive Hub Fluid (2.5 gal.)
	Grease / Specialized Lubricants
2871322	Premium All Season Grease (3 oz. cartridge)
2871423	Premium All Season Grease (14 oz. cartridge)
2871460	Starter Drive Grease
2871515	Premium U-Joint Lube (3 oz.)
2871551	Premium U-Joint Lube (14 oz.)
2871312	Grease Gun Kit
2871329	Dielectric Grease (Nyogel™)
2872073	Chain Lube (6.25 oz. aerosol)
2872348	Chain Lube (16 oz. aerosol)
	Coolant
2871323	60/40 Coolant (gal.)
2871534	60/40 Coolant (qt.)
	Additives / Miscellaneous
2872889	Brake and Clutch Cleaner
2871326	Carbon Clean Plus (12 oz.)
2870652	Fuel Stabilizer (16 oz.)
2870990	DOT3 Brake Fluid
2872893	Engine Degreaser
2871956	LOCTITE 565 Thread Sealant

SPECIFICATIONS

SPORTSMAN 6x6	
Gross Vehicle Weight	1965 lbs. (891 kg)(machine, driver, cargo)
Fuel Capacity	4.25 gallons (16.09 liters)
Towing Capacity	1500 lbs. (681 kg)
Hitch Tongue Capacity	150 lbs. (68.1 kg)
Front Rack Capacity	75 lbs. (34 kg)
Cargo Box Capacity	800 lbs. (362.8 kg)
Overall Length	105 in. (266.7 cm)
Overall Width	46 in. (116.8 cm)
Overall Height	48 in. (121.9 cm)
Wheelbase	77 in. (195.6 cm)
Ground Clearance	5.5 in. (14 cm)
Dry Weight	895 lbs. (406 kg)
Minimum Turning Radius	119 in. (302 cm) unloaded
Engine Oil Capacity	Two quarts (1.89 liters)
Gearcase Oil Capacity	32 oz. (.95 liters)
Coolant Capacity	2.25 quarts (2.13 liters)
Engine	EH50PLE104
Displacement	498cc
Bore x Stroke	92 x 75 mm
Pilot Jet	40
Main Jet	142.5
Needle Jet	Q-4M (829)
Jet Needle	4HB41-3
Alternator Output	250 Watts @ 5000 RPM
Compression Ratio	10.2:1
Starting System	Electric w/recoil backup
Carburetor	BST 34
Ignition System	DC CDI
Ignition Timing	30° ± 2° BTDC @ 5000 RPM
Spark Plug / Gap	NGK BKR5E / 0.036” (.9mm)
Lubrication System	Dry Sump
Driving System Type	PVT

SPORTSMAN 6x6	
Transmission	Automatic PVT (H/L/N/R)
Gear Reduction - Low	6.69/1
Gear Reduction - Reverse	5.17/1
Gear Reduction - High	3.34/1
Drive Ratio - Front	2/1
Drive Ratio - Final	12/38 80P
Tire Size - Front	25 x 8 - 12 (5 psi)
Tire Size - Center	25 x 11 - 10 (5 psi)
Tire Size - Rear	25 x 11 - 10 (5 psi)
Front Brake	Hydraulic Disc
Rear Brake	Hydraulic Disc
Parking Brake	Hydraulic lock, all wheel
Headlight	1 Single Beam on Handlebar (50 w) 2 Single Beam on Grill (27 w)
Taillights	8.26W
Brakelight	26.9W
Instrument Cluster	LCD

Jetting Chart

Altitude	AMBIENT TEMPERATURE	Below 40° F (Below 5° C)	+40°F and above (+5°C and above)
Meters (Feet)	0-1800 (0-6000)	**147.5**	**142.5**
	1800-3700 (6000-12000)	**140**	**135**

Clutching Chart

Altitude		Shift Weight	Drive Clutch Spring	Driven Clutch Spring	Helix/Spring Setting
Meters (Feet)	0-1800 (0-6000)	10 MH (PN 5630513)	Blue/Green (PN 7041157)	Red (PN 7041198)	40° (PN 5131446) 2+2
	1800-3700 (6000-12000)	10 WH (PN 5630710)	Blue/Green (PN 7041157)	Red (PN 7041198)	40° (PN 5131446) 2+2

TROUBLESHOOTING

Contact your Polaris dealer for service if you're unable to identify solutions using the following charts.

Drive Belt and Cover Problems	
Possible Cause	**Solution**
Starting out going up a steep incline.	Apply the parking brake, dismount ,and perform the "K" turn as outlined on page 62.
Driving at low RPM or low ground speed (about 3-7 MPH).	Drive at a higher speed.
Insufficient warm-up of vehicles exposed to low ambient temperatures.	Warm engine at least 5 min. With transmission in neutral, advance throttle to about 1/8 throttle in short bursts, 5 to 7 times. The belt will become more flexible and prevent belt burning.
Slow and easy clutch engagement.	Use the throttle quickly and effectively for efficient engagement.
Stuck in mud or snow.	Carefully use fast, aggressive throttle application to engage clutch. **WARNING:** Excessive throttle may cause loss of control and vehicle overturn.
Climbing over large objects from a stopped position.	Carefully use fast, brief, aggressive throttle application to engage clutch. **WARNING:** Excessive throttle may cause loss of control and vehicle overturn.
Belt slippage from water or snow ingestion into the PVT system.	Shift the transmission to neutral. Using the throttle, vary the engine RPM from idle to full throttle. Repeat several times as required. During this procedure, the throttle should not be held at the full position for more than 10 seconds. Clutch seals should be inspected for damage if repeated leaking occurs.
Clutch malfunction.	Contact your Polaris dealer.
Poor engine performance.	Fouled plugs, foreign material in gas tank, fuel lines, or carburetor. Contact your dealer.

Engine Doesn't Turn Over

Possible Cause	Solution
Low battery voltage	Recharge battery to 12.8 VDC
Loose battery connections	Check all connections and tighten
Loose solenoid connections	Check all connections and tighten

Engine Turns Over, Fails to Start

Possible Cause	Solution
Out of fuel	Turn fuel valve to reserve, refuel
Clogged fuel valve or filter	Inspect and clean or replace
Water is present in fuel	Drain the fuel system and refuel
Fuel valve is turned off	Turn the fuel valve on
Old or non-recommended fuel	Replace with new fuel
Fouled or defective spark plug(s)	Inspect plug(s), replace if necessary
No spark to spark plug	Inspect plug(s), verify stop switch is on
Crankcase filled with water or fuel	Immediately see your Polaris dealer
Overuse of choke	Inspect, clean and/or replace spark plugs
Clogged fuel filter	Replace the filter
Low battery voltage	Recharge battery to 12.8 VDC
Mechanical failure	See your Polaris dealer

Engine Pings or Knocks

Possible Cause	Solution
Poor quality or low octane fuel	Replace with recommended fuel
Incorrect ignition timing	See your Polaris dealer
Incorrect spark plug gap or heat range	Set gap to specs or replace plugs

TROUBLESHOOTING

Engine Backfires

Possible Cause	Solution
Weak spark from spark plugs	Inspect, clean and/or replace spark plugs
Incorrect spark plug gap or heat range	Set gap to specs or replace plugs
Old or non-recommended fuel	Replace with new fuel
Incorrectly installed spark plug wires	See your Polaris dealer
Incorrect ignition timing	See your Polaris dealer
Mechanical failure	See your Polaris dealer

Engine Runs Irregularly, Stalls or Misfires

Possible Weak Spark Cause	Solution
Fouled or defective spark plugs	Inspect, clean and/or replace spark plugs
Worn or defective spark plug wires	See your Polaris dealer
Incorrect spark plug gap or heat range	Set gap to specs or replace plugs
Loose ignition connections	Check all connections and tighten
Water present in fuel	Replace with new fuel
Low battery voltage	Recharge battery to 12.8 VDC
Kinked or plugged fuel vent line	Inspect and replace
Incorrect fuel	Replace with recommended fuel
Clogged air filter	Inspect and clean or replace
Reverse speed limiter malfunction	See your Polaris dealer
Electronic throttle control malfunction	See your Polaris dealer
Other mechanical failure	See your Polaris dealer
Possible Lean Fuel Mixture Cause	**Solution**
Low or contaminated fuel	Add or change fuel, clean the fuel system
Low octane fuel	Replace with recommended fuel
Clogged fuel filter	Replace filter
Incorrect jetting	See your Polaris dealer
Possible Rich Fuel Mixture Cause	**Solution**
Overuse of choke	Inspect, clean and/or replace spark plugs
Fuel is very high octane	Replace with lower octane fuel
Incorrect jetting	See your Polaris dealer

Engine Stops or Loses Power

Possible Cause	Solution
Out of fuel	Turn fuel valve to reserve, refuel
Kinked or plugged fuel vent line	Inspect and replace
Water present in fuel	Replace with new fuel
Overuse of choke	Inspect, clean and/or replace spark plugs
Fouled or defective spark plugs	Inspect, clean and/or replace spark plugs
Worn or defective spark plug wires	See your Polaris dealer
Incorrect spark plug gap or heat range	Set gap to specs or replace plugs
Loose ignition connections	Check all connections and tighten
Low battery voltage	Recharge battery to 12.8 VDC
Incorrect fuel	Replace with recommended fuel
Clogged air filter	Inspect and clean or replace
Reverse speed limiter malfunction	See your Polaris dealer
Electronic throttle control malfunction	See your Polaris dealer
Other mechanical failure	See your Polaris dealer
Overheated engine	Clean radiator screen and core if equipped Clean engine exterior See your Polaris dealer

Engine Overheating

Possible Cause	Solution
Debris lodged in screen	Remove and clean the screen. Pull on the top portion of the screen, then remove the lower portion.
Plugged Radiator	Use a garden hose to flush any debris from the radiator fins. **NOTE:** High pressure washers can deform the radiator fins and reduce cooling efficiency.

WARRANTY

LIMITED WARRANTY

Polaris Sales Inc., 2100 Highway 55, Medina, MN 55340, gives a SIX MONTH LIMITED WARRANTY on all components of the Polaris Light Utility Vehicle against defects in material or workmanship. Polaris also gives a one year limited warranty on the final drive chain for failure due to defects. This warranty covers the parts and labor charges for repair or replacement of defective parts which are covered by this warranty. This warranty begins on the date of purchase. This warranty is transferrable to another consumer during the warranty period through a Polaris dealer.

REGISTRATION

At the time of sale, the Warranty Registration Form must be completed by your dealer and submitted to Polaris within ten days. Upon receipt of this registration, Polaris will record the registration for warranty. THE PURCHASER MUST COMPLETE A SAFETY TRAINING COURSE PROVIDED BY THE DEALER IN ORDER TO HAVE VALID WARRANTY ON THE VEHICLE. No verification of registration will be sent to the purchaser as the copy of the Warranty Registration Form will be the warranty entitlement. If you have not signed the original registration and received the *customer copy*, please contact your dealer immediately. NO WARRANTY COVERAGE WILL BE ALLOWED UNLESS YOUR VEHICLE IS REGISTERED WITH POLARIS.

Initial dealer preparation and set-up of your vehicle is very important in ensuring trouble-free operation. Purchasing a machine in the crate or without proper dealer set-up will void your warranty coverage.

WARRANTY COVERAGE AND EXCLUSIONS: LIMITATIONS OF WARRANTIES AND REMEDIES

The Polaris limited warranty excludes any failures that are not caused by a defect in material or workmanship. This warranty does not cover accidental damage, normal wear and tear, abuse or improper handling. This warranty also does not cover any vehicle that has been altered structurally, neglected, improperly maintained, used for racing, or used for purposes other than for which it was manufactured, or for any damages which occur during trailer transit or as a result of unauthorized service or the use of unauthorized parts. In addition, this warranty does not cover physical damage to paint or finish, stress cracks, tearing or puncturing of upholstery material, corrosion, or defects in parts, components or the vehicle due to fire, explosions or any other cause beyond Polaris' control.

This warranty does not cover the use of unauthorized lubricants, chemicals, or fuels that are not compatible with the vehicle. The exclusive remedy for breach of this warranty shall be, at Polaris' exclusive option, repair or replacement of any defective materials, or components or products. THE REMEDIES SET FORTH IN THIS WARRANTY ARE THE ONLY REMEDIES AVAILABLE TO ANY PERSON FOR BREACH OF THIS WARRANTY. POLARIS SHALL HAVE NO LIABILITY TO ANY PERSON FOR INCIDENTAL, CONSEQUENTIAL OR SPECIAL DAMAGES OF ANY DESCRIPTION, WHETHER ARISING OUT OF EXPRESS OR IMPLIED WARRANTY OR ANY OTHER CONTRACT, NEGLIGENCE, OR OTHER TORT OR OTHERWISE. Some states do not permit the exclusion or limitation of incidental or consequential damages or implied warranties, so the above limitations or exclusions may not apply to you if inconsistent with controlling state law.

ALL IMPLIED WARRANTIES (INCLUDING BUT NOT LIMITED TO THE IMPLIED WARRANTIES OF MERCHANTABILITY AND FITNESS FOR A PARTICULAR PURPOSE) ARE LIMITED IN DURATION TO THE ABOVE SIX MONTH WARRANTY PERIOD. POLARIS FURTHER DISCLAIMS ALL EXPRESS WARRANTIES NOT STATED IN THIS WARRANTY. Some states do not allow limitations on how long an implied warranty lasts, so the above limitation may not apply to you if inconsistent with controlling state law.

HOW TO OBTAIN WARRANTY SERVICE

If your vehicle requires warranty service, you must take it to a Polaris Servicing Dealer. When requesting warranty service you must present your copy of the Warranty Registration form to the dealer. (THE COST OF TRANSPORTATION TO AND FROM THE DEALER IS YOUR RESPONSIBILITY). Polaris suggests that you use your original selling dealer; however, you may use any Polaris Servicing Dealer to perform warranty service.

Please work with your dealer to resolve any warranty issues. Should your dealer require any additional assistance they will contact the appropriate person at Polaris.

This warranty gives you specific legal rights, and you may also have other rights which vary from state to state.

If any of the above terms are void because of state or federal law, all other warranty terms will remain in effect.

Engine Oil

1. Mixing oil brands or using non-recommended oil may cause engine damage. We recommend the use of Polaris engine oil.

2. Damage resulting from the use of non-recommended lubricants may not be covered by warranty.

WARRANTY

Exported Vehicles

EXCEPT WHERE SPECIFICALLY REQUIRED BY LAW, THERE IS NO WARRANTY OR SERVICE BULLETIN COVERAGE ON THIS VEHICLE IF IT IS SOLD OUTSIDE THE COUNTRY OF THE SELLING DEALER'S AUTHORIZED LOCATION.

This policy does not apply to vehicles that have received authorization for export from Polaris Industries. Dealers may not give authorization for export. You should consult an authorized dealer to determine this vehicle's warranty or service bulletin coverage if you have any questions.

This policy does not apply to vehicles registered to government officials or military personnel on assignment outside the country of the selling dealer's authorized location.

This policy does not apply to Safety Recalls.

How to Get Service

In the Country where your vehicle was purchased:

Warranty or Service Bulletin repairs must be done by an authorized Polaris dealer. If you move or are traveling within the country where your vehicle was purchased, Warranty or Service Bulletin repairs may be requested from any authorized Polaris dealer who sells the same line as your vehicle.

Outside the Country where your vehicle was purchased:

If you are traveling temporarily outside the country where your vehicle was purchased, you should take your vehicle to an authorized Polaris dealer. You must show the dealer photo identification from the country of the selling dealer's authorized location as proof of residence. Upon residence verification, the servicing dealer will be authorized to perform the warranty repair.

If You Move:

If you move to another country, be sure to contact Polaris Customer Assistance and the customs department of the destination country before you move. Vehicles importation rules vary considerably from country to country. You may be required to present documentation of your move to Polaris Industries in order to continue your warranty coverage. You may also be required to obtain documentation from Polaris Industries in order to register your vehicle in your new country.

Exported Vehicles

How to Get Service

If Purchased From A Private Party:

If you purchase a Polaris product from a private citizen outside of the country in which the vehicle was originally purchased, all warranty coverage will be denied.

Notice

If your vehicle is registered outside of the country where it was purchased, and you have not followed the procedure set out above, your vehicle will no longer be eligible for warranty or service bulletin coverage of any kind. (Vehicles registered to Government officials or military personnel on assignment outside of the country where the vehicle was purchased will continue to be covered by the basic warranty.)

For questions call Polaris Customer Assistance:

United States: 1-763-417-8650

Canada: 1-204-925-7100

WARRANTY

California Emission Control Warranty Statement

Your Warranty Rights and Obligations

The California Air Resources Board and Polaris Industries Inc., 2100 Highway 55, Medina, Minnesota 55340 (herein "POLARIS") are pleased to explain the emission control system warranty on your 2005 and later Large Spark Ignition Engine (herein "LSI engine"). "The California Air Resources Board has designated this engine for this vehicle as an LSI engine which produces 25 and greater horsepower and the vehicle has a six (6) or four (4)-wheel drive and/or a round steering wheel." In California, this LSI engine must be designed, built and equipped to meet the state's stringent anti-smog standards. Polaris must warrant the emission control system on your LSI engine for the period of time described below, provided there has been no abuse, neglect or improper maintenance of your LSI engine.

Your emission control system includes parts such as the carburetor and the ignition system. Also included may be hoses, connectors and other emission-related assemblies.

Where a warrantable condition exists, POLARIS will repair your LSI engine at no cost to you, including diagnosis, parts and labor.

Manufacturer's Warranty Coverage:

The 2005 and later LSI engines are warranted for two (2) years. If any emission related part on your LSI engine is defective, the part will be repaired or replaced by POLARIS.

Owner's Warranty Responsibilities:

- As the LSI engine owner, you are responsible for the performance of the required maintenance listed in your Owner's Safety and Maintenance Manual (herein "Owner's Manual"). POLARIS recommends that you retain all receipts covering mainten ance on your LSI engine, but POLARIS cannot deny warranty solely for the lack of receipts or for your failure to ensure the performance of all scheduled maintenance.
- As the LSI engine owner, you should, however, be aware that POLARIS may deny you warranty coverage if your LSI engine or a part has failed due to abuse, neglect, improper maintenance or unapproved modifications.
- You are responsible for presenting your LSI engine to a dealer authorized by POLARIS as soon as a problem exists. The warranty repairs should be completed in a reasonable amount of time, not to exceed 30 days.

If you have any questions regarding your warranty rights and responsibilities, you should contact the Polaris Warranty Department at 1-763-417-8650.

Limited Warranty

California Only

POLARIS warrants to the owner of 2005 and later LSI engines that the LSI engine (1) has been designed, built, and equipped at the time of manufacture so as to conform with the applicable regulations of the California Air Resources Board and, (2) is free from defects in materials and workmanship which may cause it to fail to conform with those regulations as applicable according to the terms and conditions stated below.

California Emission Control Warranty Statement

Warranty Period

This warranty period begins on the date, which the LSI engine is delivered, to the original retail purchaser and ends two years after that date. During this two year period POLARIS warrants to the original retail purchaser and each subsequent purchaser that the LSI engine is free from defect in material and workmanship that can cause the failure of a warranted emission-related part.

What is Covered Under This Warranty

Repair and/or replacement of any warranted emission-related part will be performed at no charge provided the work is performed at an authorized dealer. There will also be no charge for any diagnostic labor performed at an authorized dealer, which leads to the determination that a warranted emission-related part is defective.

Any warranted part which is not scheduled for replacement as required maintenance, or which is scheduled only for regular inspection to the effect of “repair or replace as necessary” shall be warranted for the warranty period. Any warranted part which is scheduled for replacement as required maintenance shall be warranted for the period of time up to the first scheduled replacement of that part. This warranty shall apply only towards the repair, replacement, and/or adjustment of the component parts listed below.

Emission-Related Parts Covered Under This Warranty

(1) Fuel Metering System
- (i) Carburetor and internal parts (and/or pressure regulator or fuel injection system).
- (ii) Air/fuel ratio feedback and control system, if applicable.
- (iii) Cold start enrichment system, if applicable.
- (iv) Regulator assy (gaseous fuel, if applicable)

(2) Air Induction System
- (i) Intake manifold, if applicable
- (ii) Air filter

(3) Ignition System
- (i) Spark plugs.
- (ii) Magneto or electronic ignition system.
- (iii) Spark advance/retard system, if applicable.

(4) Exhaust manifold, if applicable

(5) Miscellaneous Items Used in Above Systems
- (i) Electronic controls, if applicable
- (ii) Hoses, belts, connectors, and assemblies.
- (iii) Filter lock assy (gaseous fuel, if applicable)

If an authorized dealer determines that other LSI engine components have been damaged due to the failure of a warranted emission-related part during the warranty period, POLARIS will repair and/or replace the necessary components.

WARRANTY

California Emission Control Warranty Statement

What is Not Covered Under This Warranty

This warranty does not cover any emission-related part, which malfunctions, fails, or is damaged due to alterations and/or modifications such as changing, adding, or removing parts.

When the LSI engine is being serviced under warranty, POLARIS and any of its authorized dealers shall not be liable for any loss of use of the LSI engine, for any damage to goods, or loss of time or inconvenience. This limited warranty also does not apply to any emission-related part which malfunctions, fails, or is damaged due to failure to follow the maintenance and operating instructions specified in the 2005 and later Owner's Manual including:

(a) Improper or inadequate maintenance of any warranted emission-related part
(b) Improper installation, adjustment, or repair of the LSI engine or any warranted emission-related part unless performed by an authorized dealer
(c) Failure to use recommended fuel as specified in the 2005 and later Owner's Manual
(d) Repairs and diagnosis performed outside of an authorized dealer
(e) Use of parts which are not authorized by POLARIS

Maintenance Schedule

The LSI engine owner is responsible for having all scheduled inspection and maintenance services performed at the intervals specified in the 2005 and later Owner's Manual and to retain records of these services as having been performed. These records should be transferred to each subsequent owner of the LSI engine. POLARIS cannot deny a claim solely because there are no records of scheduled maintenance, however, a warranty claim may be denied if the failure to perform the scheduled maintenance and inspection resulted in the failure of a warranted emission-related part. As a minimum, the LSI engine owner is responsible for the scheduled inspection and maintenance described below which are based on the procedures described in the Owner's Manual.

Periodic Maintenance Chart (Emissions-Related)

Inspection, adjustment and lubrication intervals of important components are listed in the following chart. Maintenance intervals are based upon average riding conditions and a vehicle speed of approximately 10 mph.

Inspect, clean, lubricate, adjust or replace parts as necessary. **NOTE:** Inspection may reveal the need for replacement parts. Always use genuine Polaris parts.

■ **CAUTION:** Due to the nature of these adjustments, it is recommended that service be performed by an authorized Polaris dealer.

▶ Vehicles subjected to severe use (operation in wet or dusty areas, low speed heavy load operation, prolonged idle) should be inspected and serviced more frequently. For engine oil, short trip cold weather riding also constitutes severe use. Pay special attention to oil level. A rise in oil level in cold weather can indicate moisture collecting in the oil tank. Change oil immediately if oil level begins to rise.

E Emission Control System Service (California).

California Emission Control Warranty Statement

Maintenance Schedule

	Item	Maintenance Interval (whichever comes first)			Remarks
		Hours	Calendar	Miles (Km)	
▶ E	Engine oil level	-	Pre-Ride	-	Make adjustments as needed. See Pre-Ride Checklist on page 51.
▶ E	Air filter, pre-filter	-	Daily	-	Inspect; clean often
▶ E	Air box sediment tube	-	Daily	-	Drain deposits when visible
▶ E	Air filter, main element	-	Weekly	-	Inspect; replace as needed
▶ E	Engine breather filter (if equipped)	25 H	Monthly	155 (250)	Inspect; replace if necessary
▶ E	Engine oil change (break-in)	25 H	1 M	155 (250)	Perform a break-in oil change at one month
■ E	Throttle Cable/ ETC Switch	50 H	6 M	310 (500)	Inspect; adjust; lubricate; replace if necessary
■ E	Choke cable	50 H	6 M	310 (500)	Inspect; adjust; lubricate; replace if necessary
E	Carburetor air intake ducts/ flange	50 H	6 M	310 (500)	Inspect ducts for proper sealing/air leaks
▶ E	Engine oil change	100 H	6 M	620 (1000)	Perform a break-in oil change at 25 hours/one month
▶ E	Oil filter change	100 H	6 M	620 (1000)	Replace with oil change
▶ E	Oil tank vent hose	100 H	12 M	620 (1000)	Inspect routing, condition
■ E	Valve clearance	100 H	12 M	620 (1000)	Inspect; adjust
■ E	Fuel system	100 H	12 M	620 (1000)	Check for leaks at tank cap, lines, fuel valve, filter, pump, carburetor; replace lines every two years
■ E	Fuel filter	100 H	12 M	620 (1000)	Replace yearly
■ E	Spark plug	100 H	12 M	620 (1000)	Inspect; replace as needed
■ E	Ignition Timing	100 H	12 M	620 (1000)	Inspect

WARRANTY

California Emission Control Warranty Statement

Repair and Replacement of Emission-Related Parts

It is recommended that only LSI engine replacement parts, which have been authorized and approved by POLARIS, should be used in the performance of any warranty maintenance or repairs of emission-related parts. These replacement parts will be provided at no charge if the part is still under warranty.

How to File a Warranty Claim/Where to Get Warranty Service

All repairs qualifying under this Limited Warranty must be performed by a dealer who sold you the LSI engine or a dealer authorized by POLARIS. In the event that any emission-related part is found to be defective during the warranty period, you must notify the Polaris Warranty Department at 1-763-417-8650 and you will be advised of the appropriate dealer where the warranty repair is to be performed.

INDEX

A

Accessories 69
Adjustments 86-94
Age Restrictions 13
Air Box Drain 85
Air Filter 84
All Wheel Drive 42
All Wheel Drive (AWD) System 43
All Wheel Drive Switch 34
Auxiliary Brakes 36

B

Battery 102-104
Battery Charging 103-104
Battery Installation 102
Battery Removal 102
Battery Storage 103
Belt Life 40
Brake, Front 88
Brake, Parking 38
Brake, Rear 89
Brakes 36-37
Breather Filter 85

C

Camber and Caster 87
Carburetor Adjustment 91
Cargo Capacities 54
Choke Adjustment 89
Chrome Wheel Care 111
Cleaning and Storage 109-111
Cleaning the ATV 109
Clutching Chart 115
CONTROLS 33-48
Coolant 82
Cooling System Operation 83
Corrosion 111
Crankcase Emission Control System . 68

D

Diagnostic Mode,
Instrumentation 47-48
Disengaging Wheel Hubs 43
Drive Chain Adjustment 90-91
Driving Downhill 60
Driving in Reverse 65
Driving on Slippery Surfaces 63
Driving Over Obstacles 67
Driving Procedures 57
Driving Safely 56-67

D

Driving Through Water 64
Driving Uphill 61
Dumping Cargo 55

E

EMISSION CONTROL SYSTEMS . 68
Engine Cooling System 82-83
Engine Idle RPM Adjustment 91
Engine Storage 110
Equipment Modifications 17
Exhaust Emission Control System . . 68

F

FEATURES 33-48
Filter Systems 84-85
Front Gearcase Lubrication 77
Front Wheel and Middle Axle Brake 88
Front Wheel Hub Tightening 89
Fuel Tank 39
Fuel Valve 39

G

Gear Selector 40

H

Handlebar Adjustment 87
Hauling Cargo 54-55
Headlight Adjustment 106
Headlight Housing Replacement . . . 107
Headlight Lamp Replacement 105
High Range 98
Hour Meter 46

I

Instrument Cluster 44-48

J

Jetting Chart 115

L

Light Switch 34
Lights 105-108
Load Distribution 56
Low Range 98
Lubrication Recommendations . . . 74-81

INDEX

M

Main Switch 34
MAINTENANCE AND LUBRICATION 69-112
Maintenance Record 112
Making Turns 58
Master Cylinders 37

N

Noise Emission Control System 68

O

Odometer 46
Oil Change 80-81
Oil Filter Change 80-81
Oil Level 79
Oil Pump Priming 92
Operating Safety 55
OPERATION 49-67
Operator Safety 13-32
Override Switch 34

P

Parking On An Incline 66
Periodic Maintenance Chart 70-73
POLARIS PRODUCTS 113
Pre-Ride Inspection 51
Premium 4 Synthetic Lubricant 78
PVT System 98-99

R

Radiator Coolant Level 82
Recoil Housing 101
Recoil Starter 41
Recovery Bottle Coolant Level 83
Reverse Speed Limiter 34
Rider Information Center 45-48

S

Safe Riding Gear 12
SAFETY 8-32
Safety Decals and Locations 8-11
Safety Training 13
Service Brakes 36
Setting the Parking Brake 38

S

Side Panel Removal 93
Sidehilling 59
Spark Arrestor 68, 100
Spark Plug Removal 97
Spark Plugs 97
SPECIFICATIONS 114-115
Starting a Cold Engine 52
Starting a Warm Engine 53
Steering Inspection 87
Stop Switch 34
Storage Tips 110
Suspension Springs 87
Switches and Indicators 34

T

Tachometer 46
Taillight/Brakelight Lamp Replacement 108
Throttle Lever 35
Tire Specifications 96
Tire Tread Depth 95
Toe Alignment 86
Tool Kit 69
Torque Specifications 96
Towing Capacities 54
Transmission Lubrication 76
Transporting the Vehicle 111
Trip Meter 46
TROUBLESHOOTING 116-119
Turning Around on a Hill 62

V

Vehicle Break-in 50
VEHICLE IDENTIFICATION NUMBERS 7

W

WARRANTY 122-128
Warranty 120-121
Washing the ATV 109
Waxing the ATV 109
WELCOME 3
Wheel Installation 94
Wheel Removal 94